THIS DRAWING IS UNPUBLISHED. RELEASED FOR PUBLICATION -,- .
© COPYRIGHT - By - ALL RIGHTS RESERVED.

LOC	DIST
CM	00

REVISIONS

P	LTR	DESCRIPTION	DATE	DWN	APVD
	E2	REVISED PER ECO-11-004820	11MAR11	RK	HMR

1. MATERIAL:
   BASE: THERMOPLASTIC POLYESTER,UL 94V-O (NATURAL).

   POST: COPPER ALLOY (TIN OR TIN-LEAD PLATED,.000150 MIN THK).
2. PARTS MUST COMPLY WITH AMP SOLDERABILITY SPEC 109-11-2.
3. PLASTIC AROUND POST PERMISSIBLE IN THIS AREA ONLY.
4. DIMENSION APPLIES WHEN HEADER IS HELD FLAT.
5. MEASURED AT -A-
6. COORDINATE DIMENSION APPLIES FROM CENTER OF ACTUAL FEATURE.
7. RADIUS AT TIP PERMITTED, BOTH ENDS.
8. POST MUST WITHSTAND 3.0 LB (13 NEWTONS) MIN AXIAL FORCE IN BOTH DIRECTIONS WITHOUT DISLODGING.
9. TOLERANCES APPLY TO SOLDER SIDE OF BOARD.
10. DIMENSION SHOULD BE .060 MIN WHEN MATING WITH A MTA-100 CONNECTOR ASSEMBLY OR A CST-100 CONNECTOR.
11. AMP LOGO MAY OR MAY NOT APPEAR ON MOLDING HOUSING.

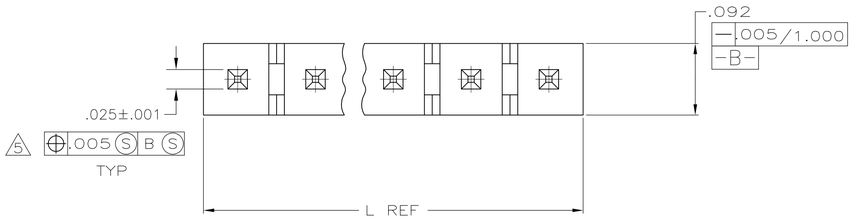

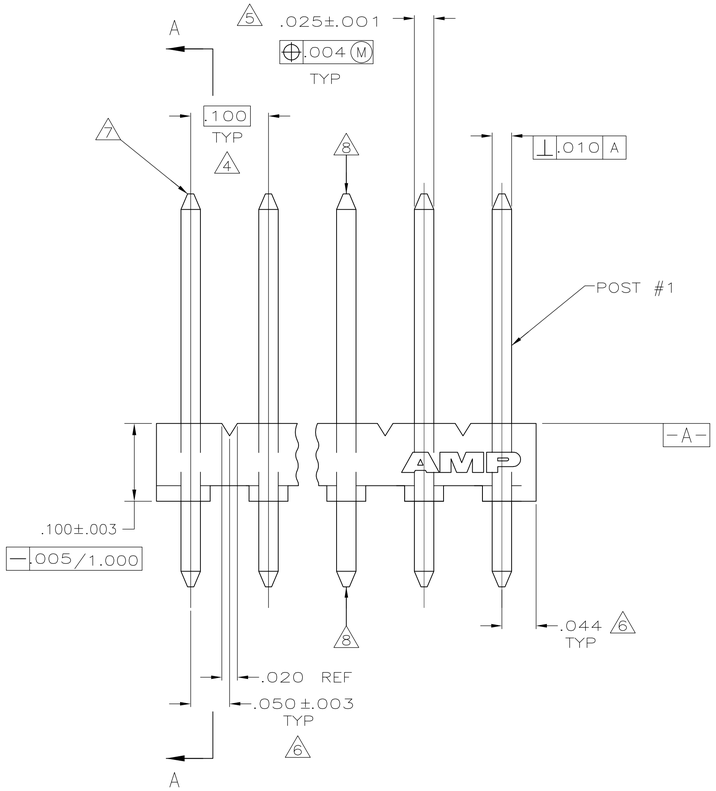

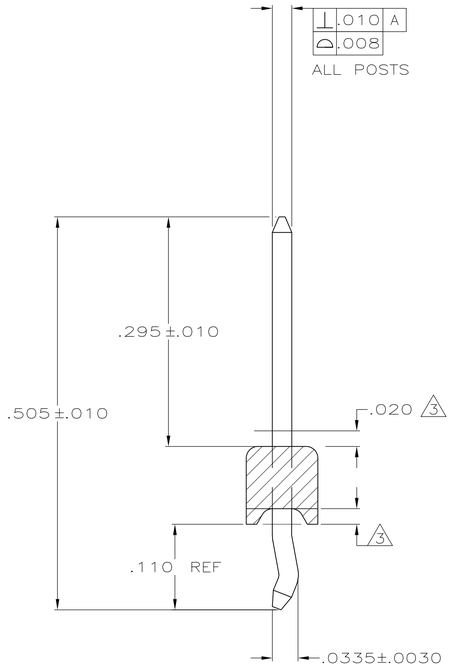

SECTION A-A

RETENTIVE FEATURE IS FOR POSTS DESIGNATED IN TABLE ONLY

	LEADFREE	RETENTIVE POSITIONS	NO. OF POSTS	IN	MM	NO. OF CIRCUITS	PART NUMBER
				L			
	YES	1,14,28	28	2.788	70.82	28	5-644695-8
		1,14,27	27	2.688	68.28	27	5-644695-7
		1,13,26	26	2.588	65.74	26	5-644695-6
		1,13,25	25	2.488	63.20	25	5-644695-5
		1,12,24	24	2.388	60.66	24	5-644695-4
		1,12,23	23	2.288	58.12	23	5-644695-3
		1,11,22	22	2.188	55.58	22	5-644695-2
		1,11,21	21	2.088	53.04	21	5-644695-1
		1,10,20	20	1.988	50.50	20	5-644695-0
		1,10,19	19	1.888	47.96	19	4-644695-9
		1,9,18	18	1.788	45.42	18	4-644695-8
		1,9,17	17	1.688	42.88	17	4-644695-7
		1,8,16	16	1.588	40.34	16	4-644695-6
		1,8,15	15	1.488	37.80	15	4-644695-5
		1,7,14	14	1.388	35.26	14	4-644695-4
		1,7,13	13	1.288	32.72	13	4-644695-3
		1,6,12	12	1.188	30.18	12	4-644695-2
		1,6,11	11	1.088	27.64	11	4-644695-1
		1,10	10	.988	25.10	10	4-644695-0
		1,9	9	.888	22.56	9	3-644695-9
		1,8	8	.788	20.02	8	3-644695-8
		1,7	7	.688	17.48	7	3-644695-7
		1,6	6	.588	14.94	6	3-644695-6
		1,5	5	.488	12.40	5	3-644695-5
		1,4	4	.388	9.86	4	3-644695-4
		1,3	3	.288	7.32	3	3-644695-3
		1,2	2	.188	4.78	2	3-644695-2
SUPERSEDED BY 5-644695-8	NO	1,14,28	28	2.788	70.82	28	2-644695-8
SUPERSEDED BY 5-644695-7		1,14,27	27	2.688	68.28	27	2-644695-7
SUPERSEDED BY 5-644695-6		1,13,26	26	2.588	65.74	26	2-644695-6
SUPERSEDED BY 5-644695-5		1,13,25	25	2.488	63.20	25	2-644695-5
SUPERSEDED BY 5-644695-4		1,12,24	24	2.388	60.66	24	2-644695-4
SUPERSEDED BY 5-644695-3		1,12,23	23	2.288	58.12	23	2-644695-3
SUPERSEDED BY 5-644695-2		1,11,22	22	2.188	55.58	22	2-644695-2
SUPERSEDED BY 5-644695-1		1,11,21	21	2.088	53.04	21	2-644695-1
SUPERSEDED BY 5-644695-0		1,10,20	20	1.988	50.50	20	2-644695-0
SUPERSEDED BY 4-644695-9		1,10,19	19	1.888	47.96	19	1-644695-9
SUPERSEDED BY 4-644695-8		1,9,18	18	1.788	45.42	18	1-644695-8
SUPERSEDED BY 4-644695-7		1,9,17	17	1.688	42.88	17	1-644695-7
SUPERSEDED BY 4-644695-6		1,8,16	16	1.588	40.34	16	1-644695-6
SUPERSEDED BY 4-644695-5		1,8,15	15	1.488	37.80	15	1-644695-5
SUPERSEDED BY 4-644695-4		1,7,14	14	1.388	35.26	14	1-644695-4
SUPERSEDED BY 4-644695-3		1,7,13	13	1.288	32.72	13	1-644695-3
SUPERSEDED BY 4-644695-2		1,6,12	12	1.188	30.18	12	1-644695-2
SUPERSEDED BY 4-644695-1		1,6,11	11	1.088	27.64	11	1-644695-1
SUPERSEDED BY 4-644695-0		1,10	10	.988	25.10	10	1-644695-0
SUPERSEDED BY 3-644695-9		1,9	9	.888	22.56	9	644695-9
SUPERSEDED BY 3-644695-8		1,8	8	.788	20.02	8	644695-8
SUPERSEDED BY 3-644695-7		1,7	7	.688	17.48	7	644695-7
SUPERSEDED BY 3-644695-6		1,6	6	.588	14.94	6	644695-6
SUPERSEDED BY 3-644695-5		1,5	5	.488	12.40	5	644695-5
SUPERSEDED BY 3-644695-4		1,4	4	.388	9.86	4	644695-4
SUPERSEDED BY 3-644695-3		1,3	3	.288	7.32	3	644695-3
SUPERSEDED BY 3-644695-2		1,2	2	.188	4.78	2	644695-2

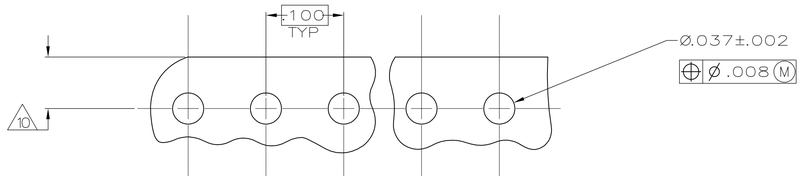

RECOMMENDED MOUNTING HOLE PATTERN FOR .063 THICK P.C. BOARD

THIS DRAWING IS A CONTROLLED DOCUMENT.

DIMENSIONS: INCHES

TOLERANCES UNLESS OTHERWISE SPECIFIED:
0 PLC ± -
1 PLC ± -
2 PLC ± -
3 PLC ± .005
4 PLC ± -
ANGLES ± -

MATERIAL 1 FINISH 1

DWN S. CARPENTER 27MAY2003
CHK D. BOSSI 27MAY2003
APVD D. BOSSI 27MAY2003
PRODUCT SPEC
APPLICATION SPEC
WEIGHT

TE Connectivity

NAME MTA-100 HEADER ASSEMBLY,NARROW .025 SQUARE STRAIGHT POST WITH RETENTIVE LEGS,TIN PLATED

SIZE	CAGE CODE	DRAWING NO	RESTRICTED TO
A1	00779	C-644695	-

CUSTOMER DRAWING SCALE 10:1 SHEET 1 OF 1 REV E2

4805 (3/11)