PIC12F609/615/617
PIC12HV609/615

Data Sheet

8-Pin, Flash-Based 8-Bit CMOS Microcontrollers

*8-bit, 8-pin Devices Protected by Microchip's Low Pin Count Patent: U.S. Patent No. 5,847,450. Additional U.S. and foreign patents and applications may be issued or pending.

© 2010 Microchip Technology Inc.

Note the following details of the code protection feature on Microchip devices:

- Microchip products meet the specification contained in their particular Microchip Data Sheet.
- Microchip believes that its family of products is one of the most secure families of its kind on the market today, when used in the intended manner and under normal conditions.
- There are dishonest and possibly illegal methods used to breach the code protection feature. All of these methods, to our knowledge, require using the Microchip products in a manner outside the operating specifications contained in Microchip's Data Sheets. Most likely, the person doing so is engaged in theft of intellectual property.
- Microchip is willing to work with the customer who is concerned about the integrity of their code.
- Neither Microchip nor any other semiconductor manufacturer can guarantee the security of their code. Code protection does not mean that we are guaranteeing the product as "unbreakable."

Code protection is constantly evolving. We at Microchip are committed to continuously improving the code protection features of our products. Attempts to break Microchip's code protection feature may be a violation of the Digital Millennium Copyright Act. If such acts allow unauthorized access to your software or other copyrighted work, you may have a right to sue for relief under that Act.

Information contained in this publication regarding device applications and the like is provided only for your convenience and may be superseded by updates. It is your responsibility to ensure that your application meets with your specifications. MICROCHIP MAKES NO REPRESENTATIONS OR WARRANTIES OF ANY KIND WHETHER EXPRESS OR IMPLIED, WRITTEN OR ORAL, STATUTORY OR OTHERWISE, RELATED TO THE INFORMATION, INCLUDING BUT NOT LIMITED TO ITS CONDITION, QUALITY, PERFORMANCE, MERCHANTABILITY OR FITNESS FOR PURPOSE**.** Microchip disclaims all liability arising from this information and its use. Use of Microchip devices in life support and/or safety applications is entirely at the buyer's risk, and the buyer agrees to defend, indemnify and hold harmless Microchip from any and all damages, claims, suits, or expenses resulting from such use. No licenses are conveyed, implicitly or otherwise, under any Microchip intellectual property rights.

Trademarks

The Microchip name and logo, the Microchip logo, dsPIC, KEELOQ, KEELOQ logo, MPLAB, PIC, PICmicro, PICSTART, rfPIC and UNI/O are registered trademarks of Microchip Technology Incorporated in the U.S.A. and other countries.

FilterLab, Hampshire, HI-TECH C, Linear Active Thermistor, MXDEV, MXLAB, SEEVAL and The Embedded Control Solutions Company are registered trademarks of Microchip Technology Incorporated in the U.S.A.

Analog-for-the-Digital Age, Application Maestro, CodeGuard, dsPICDEM, dsPICDEM.net, dsPICworks, dsSPEAK, ECAN, ECONOMONITOR, FanSense, HI-TIDE, In-Circuit Serial Programming, ICSP, Mindi, MiWi, MPASM, MPLAB Certified logo, MPLIB, MPLINK, mTouch, Octopus, Omniscient Code Generation, PICC, PICC-18, PICDEM, PICDEM.net, PICkit, PICtail, PIC^{32} logo, REAL ICE, rfLAB, Select Mode, Total Endurance, TSHARC, UniWinDriver, WiperLock and ZENA are trademarks of Microchip Technology Incorporated in the U.S.A. and other countries.

SQTP is a service mark of Microchip Technology Incorporated in the U.S.A.

All other trademarks mentioned herein are property of their respective companies.

© 2010, Microchip Technology Incorporated, Printed in the U.S.A., All Rights Reserved.

Printed on recycled paper.

QUALITY MANAGEMENT SYSTEM
CERTIFIED BY DNV
ISO/TS 16949:2002

Microchip received ISO/TS-16949:2002 certification for its worldwide headquarters, design and wafer fabrication facilities in Chandler and Tempe, Arizona; Gresham, Oregon and design centers in California and India. The Company's quality system processes and procedures are for its PIC® MCUs and dsPIC® DSCs, KEELOQ® code hopping devices, Serial EEPROMs, microperipherals, nonvolatile memory and analog products. In addition, Microchip's quality system for the design and manufacture of development systems is ISO 9001:2000 certified.

PIC12F609/615/617/12HV609/615

8-Pin Flash-Based, 8-Bit CMOS Microcontrollers

High-Performance RISC CPU:

- Only 35 Instructions to Learn:
  - All single-cycle instructions except branches
- Operating Speed:
  - DC – 20 MHz oscillator/clock input
  - DC – 200 ns instruction cycle
- Interrupt Capability
- 8-Level Deep Hardware Stack
- Direct, Indirect and Relative Addressing modes

Special Microcontroller Features:

- Precision Internal Oscillator:
  - Factory calibrated to ±1%, typical
  - Software selectable frequency: 4 MHz or 8 MHz
- Power-Saving Sleep mode
- Voltage Range:
  - PIC12F609/615/617: 2.0V to 5.5V
  - PIC12HV609/615: 2.0V to user defined maximum **(see note)**
- Industrial and Extended Temperature Range
- Power-on Reset (POR)
- Power-up Timer (PWRT) and Oscillator Start-up Timer (OST)
- Brown-out Reset (BOR)
- Watchdog Timer (WDT) with independent Oscillator for Reliable Operation
- Multiplexed Master Clear with Pull-up/Input Pin
- Programmable Code Protection
- High Endurance Flash:
  - 100,000 write Flash endurance
  - Flash retention: > 40 years
- Self Read/ Write Program Memory (PIC12F617 only)

Low-Power Features:

- Standby Current:
  - 50 nA @ 2.0V, typical
- Operating Current:
  - 11 μA @ 32 kHz, 2.0V, typical
  - 260 μA @ 4 MHz, 2.0V, typical
- Watchdog Timer Current:
  - 1 μA @ 2.0V, typical

Note: Voltage across the shunt regulator should not exceed 5V.

Peripheral Features:

- Shunt Voltage Regulator (PIC12HV609/615 only):
  - 5 volt regulation
  - 4 mA to 50 mA shunt range
- 5 I/O Pins and 1 Input Only
- High Current Source/Sink for Direct LED Drive
  - Interrupt-on-pin change or pins
  - Individually programmable weak pull-ups
- Analog Comparator module with:
  - One analog comparator
  - Programmable on-chip voltage reference (CV_{REF}) module (% of V_{DD})
  - Comparator inputs and output externally accessible
  - Built-In Hysteresis (software selectable)
- Timer0: 8-Bit Timer/Counter with 8-Bit Programmable Prescaler
- Enhanced Timer1:
  - 16-bit timer/counter with prescaler
  - External Timer1 Gate (count enable)
  - Option to use OSC1 and OSC2 in LP mode as Timer1 oscillator if INTOSC mode selected
  - Option to use system clock as Timer1
- In-Circuit Serial Programming™ (ICSP™) via Two Pins

PIC12F615/617/HV615 ONLY:

- Enhanced Capture, Compare, PWM module:
  - 16-bit Capture, max. resolution 12.5 ns
  - Compare, max. resolution 200 ns
  - 10-bit PWM with 1 or 2 output channels, 1 output channel programmable “dead time,” max. frequency 20 kHz, auto-shutdown
- A/D Converter:
  - 10-bit resolution and 4 channels, samples internal voltage references
- Timer2: 8-Bit Timer/Counter with 8-Bit Period Register, Prescaler and Postscaler

© 2010 Microchip Technology Inc.

Device	Program Memory	Data Memory	Self Read/ Self Write	I/O	10-bit A/D (ch)	Comparators	ECCP	Timers 8/16-bit	Voltage Range
	Flash (words)	SRAM (bytes)							
PIC12F609	1024	64	—	5	0	1	—	1/1	2.0V-5.5V
PIC12HV609	1024	64	—	5	0	1	—	1/1	2.0V-user defined
PIC12F615	1024	64	—	5	4	1	YES	2/1	2.0V-5.5V
PIC12HV615	1024	64	—	5	4	1	YES	2/1	2.0V-user defined
PIC12F617	2048	128	YES	5	4	1	YES	2/1	2.0V-5.5V

8-Pin Diagram, PIC12F609/HV609 (PDIP, SOIC, MSOP, DFN)

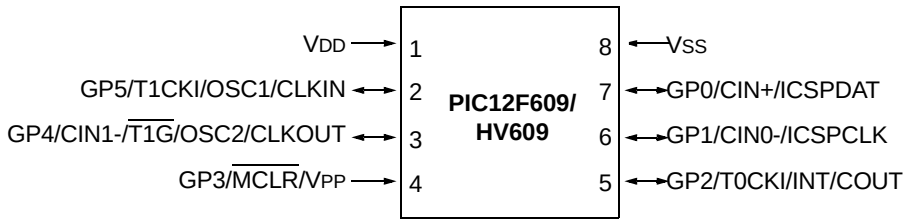

TABLE 1: PIC12F609/HV609 PIN SUMMARY (PDIP, SOIC, MSOP, DFN)

I/O	Pin	Comparators	Timer	Interrupts	Pull-ups	Basic
GP0	7	CIN+	—	IOC	Y	ICSPDAT
GP1	6	CIN0-	—	IOC	Y	ICSPCLK
GP2	5	COUT	T0CKI	INT/IOC	Y	—
GP3(1)	4	—	—	IOC	Y(2)	$\overline{MCLR}$/VPP
GP4	3	CIN1-	$\overline{T1G}$	IOC	Y	OSC2/CLKOUT
GP5	2	—	T1CKI	IOC	Y	OSC1/CLKIN
—	1	—	—	—	—	VDD
—	8	—	—	—	—	VSS

Note 1: Input only.

2: Only when pin is configured for external $\overline{MCLR}$.

© 2010 Microchip Technology Inc.

8-Pin Diagram, PIC12F615/617/HV615 (PDIP, SOIC, MSOP, DFN)

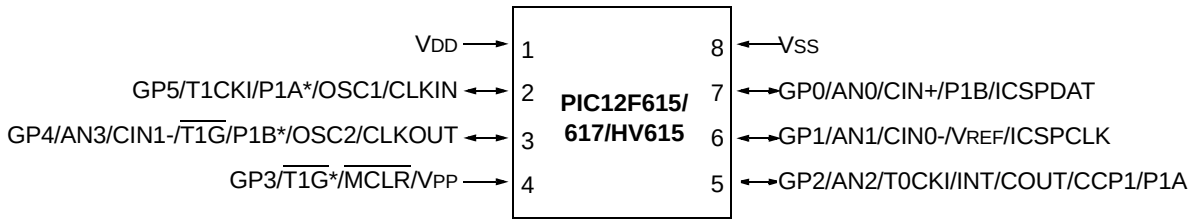

* Alternate pin function.

TABLE 2: PIC12F615/617/HV615 PIN SUMMARY (PDIP, SOIC, MSOP, DFN)

I/O	Pin	Analog	Comparators	Timer	CCP	Interrupts	Pull-ups	Basic
GP0	7	AN0	CIN+	—	P1B	IOC	Y	ICSPDAT
GP1	6	AN1	CIN0-	—	—	IOC	Y	ICSPCLK/VREF
GP2	5	AN2	COUT	T0CKI	CCP1/P1A	INT/IOC	Y	—
GP3(1)	4	—	—	$\overline{\text{T1G}}$*	—	IOC	Y(2)	$\overline{\text{MCLR}}$/VPP
GP4	3	AN3	CIN1-	$\overline{\text{T1G}}$	P1B*	IOC	Y	OSC2/CLKOUT
GP5	2	—	—	T1CKI	P1A*	IOC	Y	OSC1/CLKIN
—	1	—	—	—	—	—	—	VDD
—	8	—	—	—	—	—	—	VSS

* Alternate pin function.

Note 1: Input only.

2: Only when pin is configured for external $\overline{\text{MCLR}}$.

Table of Contents

1.0 Device Overview 7
2.0 Memory Organization 11
3.0 Flash Program Memory Self Read/Self Write Control (PIC12F617 only) 27
4.0 Oscillator Module 37
5.0 I/O Port 43
6.0 Timer0 Module 53
7.0 Timer1 Module with Gate Control 57
8.0 Timer2 Module (PIC12F615/617/HV615 only) 65
9.0 Comparator Module 67
10.0 Analog-to-Digital Converter (ADC) Module (PIC12F615/617/HV615 only) 79
11.0 Enhanced Capture/Compare/PWM (With Auto-Shutdown and Dead Band) Module (PIC12F615/617/HV615 only) 89
12.0 Special Features of the CPU 107
13.0 Voltage Regulator 127
14.0 Instruction Set Summary 129
15.0 Development Support 139
16.0 Electrical Specifications 143
17.0 DC and AC Characteristics Graphs and Tables 171
18.0 Packaging Information 195
Appendix A: Data Sheet Revision History 203
Appendix B: Migrating from other PIC® Devices 203
Index 205
The Microchip Web Site 209
Customer Change Notification Service 209
Customer Support 209
Reader Response 210
Product Identification System 211
Worldwide Sales and Service 212

TO OUR VALUED CUSTOMERS

It is our intention to provide our valued customers with the best documentation possible to ensure successful use of your Microchip products. To this end, we will continue to improve our publications to better suit your needs. Our publications will be refined and enhanced as new volumes and updates are introduced.

If you have any questions or comments regarding this publication, please contact the Marketing Communications Department via E-mail at **docerrors@microchip.com** or fax the **Reader Response Form** in the back of this data sheet to (480) 792-4150. We welcome your feedback.

Most Current Data Sheet

To obtain the most up-to-date version of this data sheet, please register at our Worldwide Web site at:

http://www.microchip.com

You can determine the version of a data sheet by examining its literature number found on the bottom outside corner of any page. The last character of the literature number is the version number, (e.g., DS30000A is version A of document DS30000).

Errata

An errata sheet, describing minor operational differences from the data sheet and recommended workarounds, may exist for current devices. As device/documentation issues become known to us, we will publish an errata sheet. The errata will specify the revision of silicon and revision of document to which it applies.

To determine if an errata sheet exists for a particular device, please check with one of the following:

- Microchip's Worldwide Web site; http://www.microchip.com
- Your local Microchip sales office (see last page)

When contacting a sales office, please specify which device, revision of silicon and data sheet (include literature number) you are using.

Customer Notification System

Register on our web site at **www.microchip.com** to receive the most current information on all of our products.

© 2010 Microchip Technology Inc.

1.0 DEVICE OVERVIEW

The PIC12F609/615/617/12HV609/615 devices are covered by this data sheet. They are available in 8-pin PDIP, SOIC, MSOP and DFN packages.

Block Diagrams and pinout descriptions of the devices are as follows:

- PIC12F609/HV609 (Figure 1-1, Table 1-1)
- PIC12F615/617/HV615 (Figure 1-2, Table 1-2)

FIGURE 1-1: PIC12F609/HV609 BLOCK DIAGRAM

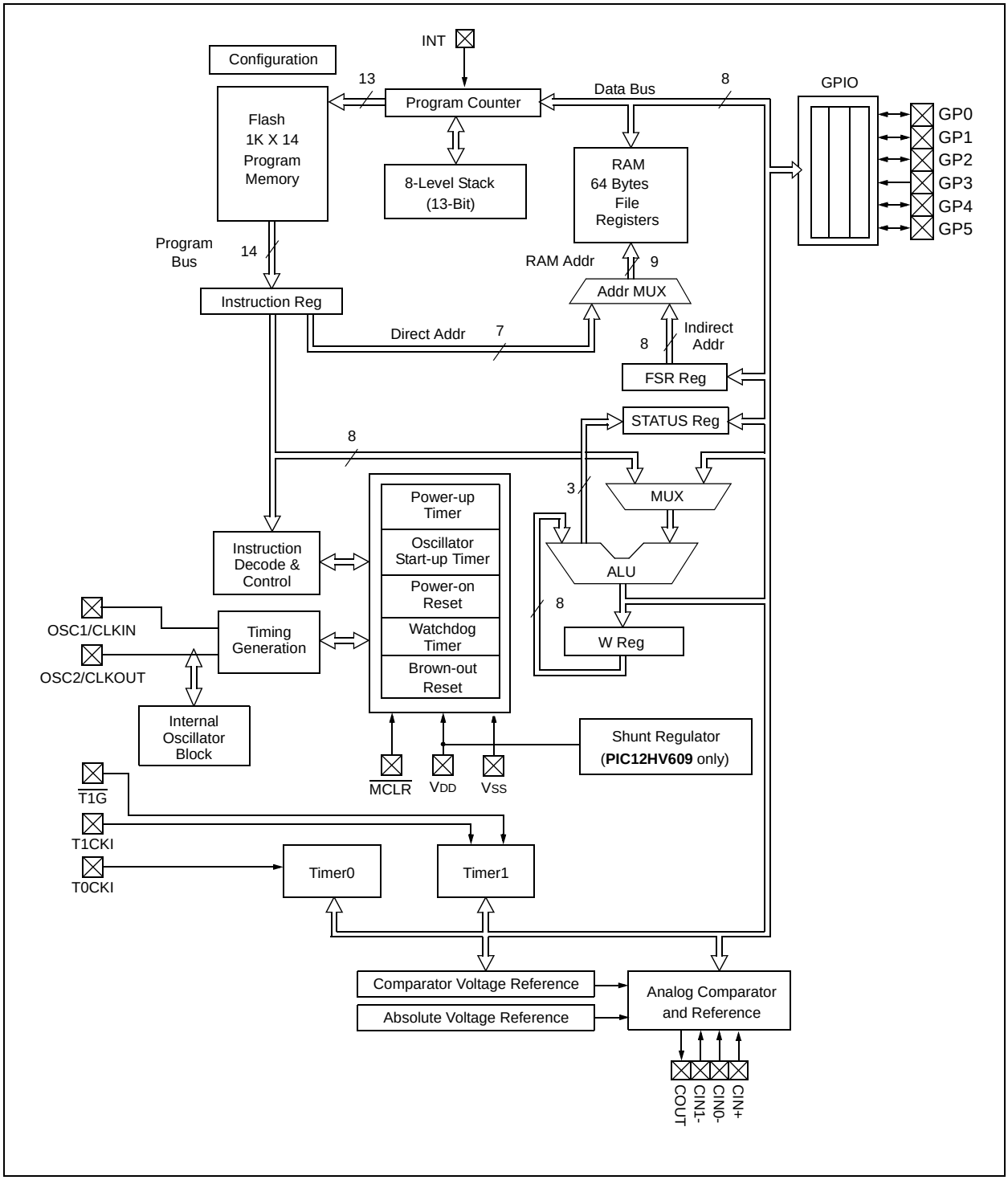

FIGURE 1-2: PIC12F615/617/HV615 BLOCK DIAGRAM

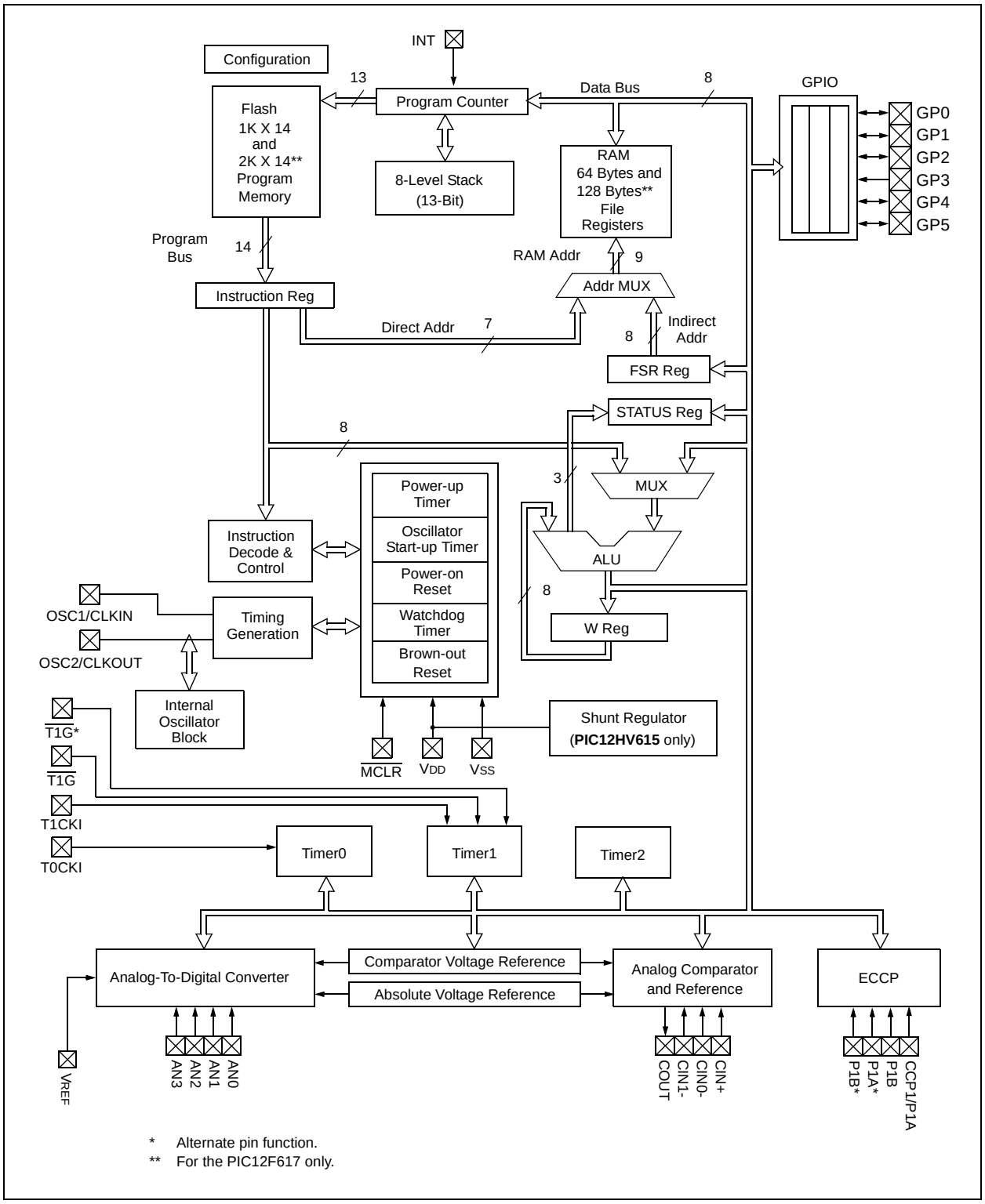

* Alternate pin function.
** For the PIC12F617 only.

© 2010 Microchip Technology Inc.

TABLE 1-1: PIC12F609/HV609 PINOUT DESCRIPTION

Name	Function	Input Type	Output Type	Description
GP0/CIN+/ICSPDAT	GP0	TTL	CMOS	General purpose I/O with prog. pull-up and interrupt-on-change
	CIN+	AN	—	Comparator non-inverting input
	ICSPDAT	ST	CMOS	Serial Programming Data I/O
GP1/CIN0-/ICSPCLK	GP1	TTL	CMOS	General purpose I/O with prog. pull-up and interrupt-on-change
	CIN0-	AN	—	Comparator inverting input
	ICSPCLK	ST	—	Serial Programming Clock
GP2/T0CKI/INT/COUT	GP2	ST	CMOS	General purpose I/O with prog. pull-up and interrupt-on-change
	T0CKI	ST	—	Timer0 clock input
	INT	ST	—	External Interrupt
	COUT	—	CMOS	Comparator output
GP3/$\overline{\text{MCLR}}$/VPP	GP3	TTL	—	General purpose input with interrupt-on-change
	$\overline{\text{MCLR}}$	ST	—	Master Clear w/internal pull-up
	VPP	HV	—	Programming voltage
GP4/CIN1-/$\overline{\text{T1G}}$/OSC2/CLKOUT	GP4	TTL	CMOS	General purpose I/O with prog. pull-up and interrupt-on-change
	CIN1-	AN	—	Comparator inverting input
	$\overline{\text{T1G}}$	ST	—	Timer1 gate (count enable)
	OSC2	—	XTAL	Crystal/Resonator
	CLKOUT	—	CMOS	FOSC/4 output
GP5/T1CKI/OSC1/CLKIN	GP5	TTL	CMOS	General purpose I/O with prog. pull-up and interrupt-on-change
	T1CKI	ST	—	Timer1 clock input
	OSC1	XTAL	—	Crystal/Resonator
	CLKIN	ST	—	External clock input/RC oscillator connection
VDD	VDD	Power	—	Positive supply
VSS	VSS	Power	—	Ground reference

Legend: AN=Analog input or output; ST=Schmitt Trigger input with CMOS levels; CMOS = CMOS compatible input or output; TTL = TTL compatible input; HV= High Voltage; XTAL=Crystal

TABLE 1-2: PIC12F615/617/HV615 PINOUT DESCRIPTION

Name	Function	Input Type	Output Type	Description
GP0/AN0/CIN+/P1B/ICSPDAT	GP0	TTL	CMOS	General purpose I/O with prog. pull-up and interrupt-on-change
	AN0	AN	—	A/D Channel 0 input
	CIN+	AN	—	Comparator non-inverting input
	P1B	—	CMOS	PWM output
	ICSPDAT	ST	CMOS	Serial Programming Data I/O
GP1/AN1/CIN0-/VREF/ICSPCLK	GP1	TTL	CMOS	General purpose I/O with prog. pull-up and interrupt-on-change
	AN1	AN	—	A/D Channel 1 input
	CIN0-	AN	—	Comparator inverting input
	VREF	AN	—	External Voltage Reference for A/D
	ICSPCLK	ST	—	Serial Programming Clock
GP2/AN2/T0CKI/INT/COUT/CCP1/P1A	GP2	ST	CMOS	General purpose I/O with prog. pull-up and interrupt-on-change
	AN2	AN	—	A/D Channel 2 input
	T0CKI	ST	—	Timer0 clock input
	INT	ST	—	External Interrupt
	COUT	—	CMOS	Comparator output
	CCP1	ST	CMOS	Capture input/Compare input/PWM output
	P1A	—	CMOS	PWM output
GP3/$\overline{\text{T1G}}$*/$\overline{\text{MCLR}}$/VPP	GP3	TTL	—	General purpose input with interrupt-on-change
	$\overline{\text{T1G}}$*	ST	—	Timer1 gate (count enable), alternate pin
	$\overline{\text{MCLR}}$	ST	—	Master Clear w/internal pull-up
	VPP	HV	—	Programming voltage
GP4/AN3/CIN1-/$\overline{\text{T1G}}$/P1B*/OSC2/CLKOUT	GP4	TTL	CMOS	General purpose I/O with prog. pull-up and interrupt-on-change
	AN3	AN	—	A/D Channel 3 input
	CIN1-	AN	—	Comparator inverting input
	$\overline{\text{T1G}}$	ST	—	Timer1 gate (count enable)
	P1B*	—	CMOS	PWM output, alternate pin
	OSC2	—	XTAL	Crystal/Resonator
	CLKOUT	—	CMOS	FOSC/4 output
GP5/T1CKI/P1A*/OSC1/CLKIN	GP5	TTL	CMOS	General purpose I/O with prog. pull-up and interrupt-on-change
	T1CKI	ST	—	Timer1 clock input
	P1A*	—	CMOS	PWM output, alternate pin
	OSC1	XTAL	—	Crystal/Resonator
	CLKIN	ST	—	External clock input/RC oscillator connection
VDD	VDD	Power	—	Positive supply
VSS	VSS	Power	—	Ground reference

* Alternate pin function.

Legend: AN=Analog input or output; CMOS=CMOS compatible input or output; HV= High Voltage; ST=Schmitt Trigger input with CMOS levels; TTL = TTL compatible input; XTAL=Crystal

© 2010 Microchip Technology Inc.

2.0 MEMORY ORGANIZATION

2.1 Program Memory Organization

The PIC12F609/615/617/12HV609/615 has a 13-bit program counter capable of addressing an 8K x 14 program memory space. Only the first 1K x 14 (0000h-03FFh) for the PIC12F609/615/12HV609/615 is physically implemented. For the PIC12F617, the first 2K x 14 (0000h-07FFh) is physically implemented. Accessing a location above these boundaries will cause a wrap-around within the first 1K x 14 space for PIC12F609/615/12HV609/615 devices, and within the first 2K x 14 space for the PIC12F617 device. The Reset vector is at 0000h and the interrupt vector is at 0004h (see Figure 2-1).

FIGURE 2-1: PROGRAM MEMORY MAP AND STACK FOR THE PIC12F609/615/12HV609/615

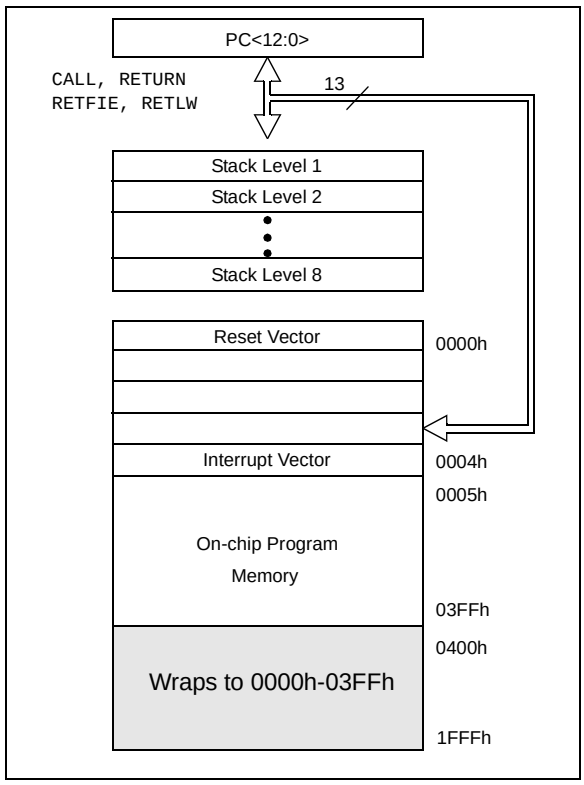

FIGURE 2-2: PROGRAM MEMORY MAP AND STACK FOR THE PIC12F617

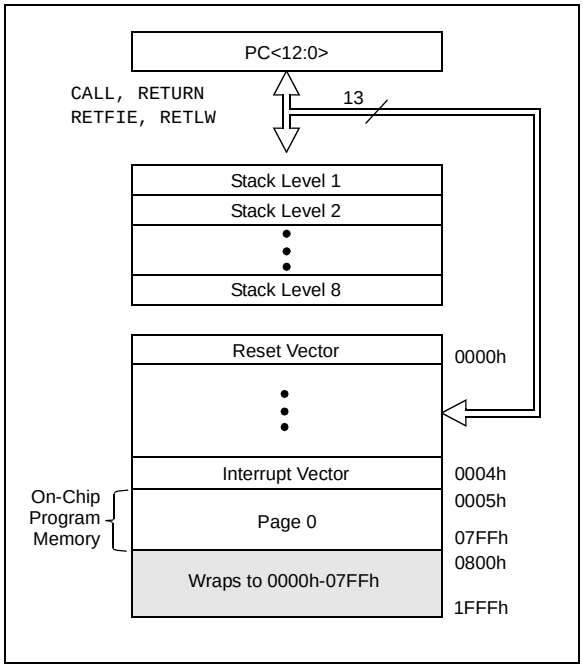

2.2 Data Memory Organization

The data memory (see Figure 2-3) is partitioned into two banks, which contain the General Purpose Registers (GPR) and the Special Function Registers (SFR). The Special Function Registers are located in the first 32 locations of each bank. Register locations 40h-7Fh in Bank 0 are General Purpose Registers, implemented as static RAM. For the PIC12F617, the register locations 20h-7Fh in Bank 0 and A0h-EFh in Bank 1 are general purpose registers implemented as Static RAM. Register locations F0h-FFh in Bank 1 point to addresses 70h-7Fh in Bank 0. All other RAM is unimplemented and returns '0' when read. The RP0 bit of the STATUS register is the bank select bit.

RP0

0 → Bank 0 is selected

1 → Bank 1 is selected

Note:	The IRP and RP1 bits of the STATUS register are reserved and should always be maintained as '0's.

2.2.1 GENERAL PURPOSE REGISTER FILE

The register file is organized as 64 x 8 in the PIC12F609/615/12HV609/615, and as 128 x 8 in the PIC12F617. Each register is accessed, either directly or indirectly, through the File Select Register (FSR) (see **Section 2.4 "Indirect Addressing, INDF and FSR Registers"**).

2.2.2 SPECIAL FUNCTION REGISTERS

The Special Function Registers are registers used by the CPU and peripheral functions for controlling the desired operation of the device (see Table 2-1). These registers are static RAM.

The special registers can be classified into two sets: core and peripheral. The Special Function Registers associated with the "core" are described in this section. Those related to the operation of the peripheral features are described in the section of that peripheral feature.

FIGURE 2-3: DATA MEMORY MAP OF THE PIC12F609/HV609

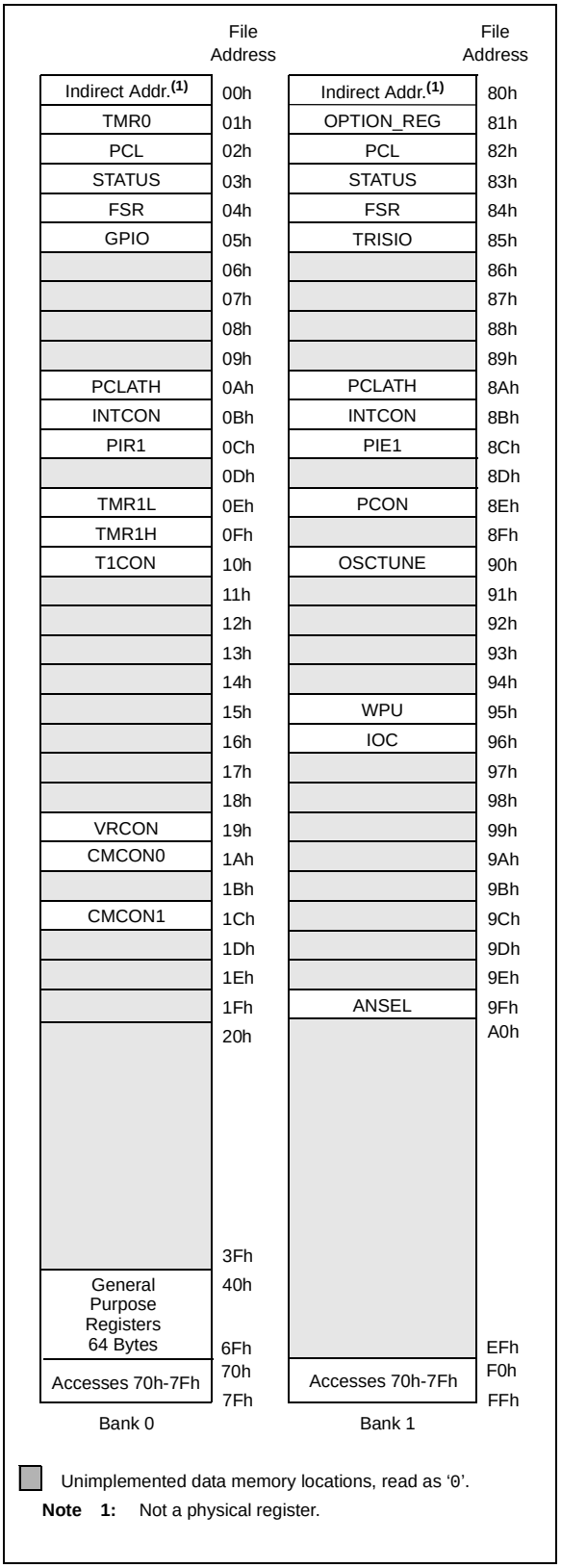

© 2010 Microchip Technology Inc.

FIGURE 2-4: DATA MEMORY MAP OF THE PIC12F615/617/HV615

Bank 0	File Address	Bank 1	File Address
Indirect Addr.(1)	00h	Indirect Addr.(1)	80h
TMR0	01h	OPTION_REG	81h
PCL	02h	PCL	82h
STATUS	03h	STATUS	83h
FSR	04h	FSR	84h
GPIO	05h	TRISIO	85h
	06h		86h
	07h		87h
	08h		88h
	09h		89h
PCLATH	0Ah	PCLATH	8Ah
INTCON	0Bh	INTCON	8Bh
PIR1	0Ch	PIE1	8Ch
	0Dh		8Dh
TMR1L	0Eh	PCON	8Eh
TMR1H	0Fh		8Fh
T1CON	10h	OSCTUNE	90h
TMR2	11h		91h
T2CON	12h	PR2	92h
CCPR1L	13h	APFCON	93h
CCPR1H	14h		94h
CCP1CON	15h	WPU	95h
PWM1CON	16h	IOC	96h
ECCPAS	17h		97h
	18h	PMCON1(2)	98h
VRCON	19h	PMCON2(2)	99h
CMCON0	1Ah	PMADRL(2)	9Ah
	1Bh	PMADRH(2)	9Bh
CMCON1	1Ch	PMDATL(2)	9Ch
	1Dh	PMDATH(2)	9Dh
ADRESH	1Eh	ADRESL	9Eh
ADCON0	1Fh	ANSEL	9Fh
General Purpose Registers 96 Bytes from 20h-7Fh(2) Unimplemented for PIC12F615/HV615	20h … 3Fh	General Purpose Registers 32 Bytes(2) Unimplemented for PIC12F615/HV615	A0h … BFh
General Purpose Registers 64 Bytes	40h … 6Fh		C0h … EFh
Accesses 70h-7Fh	70h … 7Fh	Accesses 70h-7Fh	F0h … FFh

Unimplemented data memory locations, read as '0'.

Note 1: Not a physical register.

2: Used for the PIC12F617 only.

TABLE 2-1: PIC12F609/HV609 SPECIAL FUNCTION REGISTERS SUMMARY BANK 0

Addr	Name	Bit 7	Bit 6	Bit 5	Bit 4	Bit 3	Bit 2	Bit 1	Bit 0	Value on POR, BOR	Page
Bank 0											
00h	INDF	Addressing this location uses contents of FSR to address data memory (not a physical register)								xxxx xxxx	25, 115
01h	TMR0	Timer0 Module's Register								xxxx xxxx	53, 115
02h	PCL	Program Counter's (PC) Least Significant Byte								0000 0000	25, 115
03h	STATUS	IRP(1)	RP1(1)	RP0	$\overline{TO}$	$\overline{PD}$	Z	DC	C	0001 1xxx	18, 115
04h	FSR	Indirect Data Memory Address Pointer								xxxx xxxx	25, 115
05h	GPIO	—	—	GP5	GP4	GP3	GP2	GP1	GP0	--x0 x000	43, 115
06h	—	Unimplemented								—	—
07h	—	Unimplemented								—	—
08h	—	Unimplemented								—	—
09h	—	Unimplemented								—	—
0Ah	PCLATH	—	—	—	Write Buffer for upper 5 bits of Program Counter					---0 0000	25, 115
0Bh	INTCON	GIE	PEIE	T0IE	INTE	GPIE	T0IF	INTF	GPIF	0000 0000	20, 115
0Ch	PIR1	—	—	—	—	CMIF	—	—	TMR1IF	---- 0--0	22, 115
0Dh	—	Unimplemented								—	—
0Eh	TMR1L	Holding Register for the Least Significant Byte of the 16-bit TMR1 Register								xxxx xxxx	57, 115
0Fh	TMR1H	Holding Register for the Most Significant Byte of the 16-bit TMR1 Register								xxxx xxxx	57, 115
10h	T1CON	T1GINV	TMR1GE	T1CKPS1	T1CKPS0	T1OSCEN	$\overline{T1SYNC}$	TMR1CS	TMR1ON	0000 0000	62, 115
11h	—	Unimplemented								—	—
12h	—	Unimplemented								—	—
13h	—	Unimplemented								—	—
14h	—	Unimplemented								—	—
15h	—	Unimplemented								—	—
16h	—	Unimplemented								—	—
17h	—	Unimplemented								—	—
18h	—	Unimplemented								—	—
19h	VRCON	CMVREN	—	VRR	FVREN	VR3	VR2	VR1	VR0	0-00 0000	76, 116
1Ah	CMCON0	CMON	COUT	CMOE	CMPOL	—	CMR	—	CMCH	0000 -0-0	72, 116
1Bh	—					—		—		—	—
1Ch	CMCON1	—	—	—	T1ACS	CMHYS	—	T1GSS	CMSYNC	---0 0-10	73, 116
1Dh	—	Unimplemented								—	—
1Eh	—	Unimplemented								—	—
1Fh	—	Unimplemented								—	—

Legend: – = Unimplemented locations read as '0', u = unchanged, x = unknown, q = value depends on condition, shaded = unimplemented

1: IRP and RP1 bits are reserved, always maintain these bits clear.

2: Read only register.

© 2010 Microchip Technology Inc.

TABLE 2-2: PIC12F615/617/HV615 SPECIAL FUNCTION REGISTERS SUMMARY BANK 0

Addr	Name	Bit 7	Bit 6	Bit 5	Bit 4	Bit 3	Bit 2	Bit 1	Bit 0	Value on POR, BOR	Page
Bank 0											
00h	INDF	Addressing this location uses contents of FSR to address data memory (not a physical register)								xxxx xxxx	25, 116
01h	TMR0	Timer0 Module's Register								xxxx xxxx	53, 116
02h	PCL	Program Counter's (PC) Least Significant Byte								0000 0000	25, 116
03h	STATUS	IRP(1)	RP1(1)	RP0	$\overline{TO}$	$\overline{PD}$	Z	DC	C	0001 1xxx	18, 116
04h	FSR	Indirect Data Memory Address Pointer								xxxx xxxx	25, 116
05h	GPIO	—	—	GP5	GP4	GP3	GP2	GP1	GP0	--x0 x000	43, 116
06h	—	Unimplemented								—	—
07h	—	Unimplemented								—	—
08h	—	Unimplemented								—	—
09h	—	Unimplemented								—	—
0Ah	PCLATH	—	—	—	Write Buffer for upper 5 bits of Program Counter					---0 0000	25, 116
0Bh	INTCON	GIE	PEIE	T0IE	INTE	GPIE	T0IF	INTF	GPIF	0000 0000	20, 116
0Ch	PIR1	—	ADIF	CCP1IF	—	CMIF	—	TMR2IF	TMR1IF	-00- 0-00	22, 116
0Dh	—	Unimplemented								—	—
0Eh	TMR1L	Holding Register for the Least Significant Byte of the 16-bit TMR1 Register								xxxx xxxx	57, 116
0Fh	TMR1H	Holding Register for the Most Significant Byte of the 16-bit TMR1 Register								xxxx xxxx	57, 116
10h	T1CON	T1GINV	TMR1GE	T1CKPS1	T1CKPS0	T1OSCEN	$\overline{T1SYNC}$	TMR1CS	TMR1ON	0000 0000	62, 116
11h	TMR2(3)	Timer2 Module Register								0000 0000	65, 116
12h	T2CON(3)	—	TOUTPS3	TOUTPS2	TOUTPS1	TOUTPS0	TMR2ON	T2CKPS1	T2CKPS0	-000 0000	66, 116
13h	CCPR1L(3)	Capture/Compare/PWM Register 1 Low Byte								XXXX XXXX	90, 116
14h	CCPR1H(3)	Capture/Compare/PWM Register 1 High Byte								XXXX XXXX	90, 116
15h	CCP1CON(3)	P1M	—	DC1B1	DC1B0	CCP1M3	CCP1M2	CCP1M1	CCP1M0	0-00 0000	89, 116
16h	PWM1CON(3)	PRSEN	PDC6	PDC5	PDC4	PDC3	PDC2	PDC1	PDC0	0000 0000	105, 116
17h	ECCPAS(3)	ECCPASE	ECCPAS2	ECCPAS1	ECCPAS0	PSSAC1	PSSAC0	PSSBD1	PSSBD0	0000 0000	102, 116
18h	—	Unimplemented								—	—
19h	VRCON	CMVREN	—	VRR	FVREN	VR3	VR2	VR1	VR0	0-00 0000	76, 116
1Ah	CMCON0	CMON	COUT	CMOE	CMPOL	—	CMR	—	CMCH	0000 -0-0	72, 116
1Bh	—					—		—		—	—
1Ch	CMCON1	—	—	—	T1ACS	CMHYS	—	T1GSS	CMSYNC	---0 0-10	73, 116
1Dh	—	Unimplemented								—	—
1Eh	ADRESH(2, 3)	Most Significant 8 bits of the left shifted A/D result or 2 bits of right shifted result								xxxx xxxx	85, 116
1Fh	ADCON0(3)	ADFM	VCFG	—	CHS2	CHS1	CHS0	GO/$\overline{DONE}$	ADON	00-0 0000	84, 116

Legend: – = Unimplemented locations read as '0', u = unchanged, x = unknown, q = value depends on condition, shaded = unimplemented

Note 1: IRP and RP1 bits are reserved, always maintain these bits clear.

2: Read only register.

3: PIC12F615/617/HV615 only.

TABLE 2-3: PIC12F609/HV609 SPECIAL FUNCTION REGISTERS SUMMARY BANK 1

Addr	Name	Bit 7	Bit 6	Bit 5	Bit 4	Bit 3	Bit 2	Bit 1	Bit 0	Value on POR, BOR	Page
Bank 1											
80h	INDF	Addressing this location uses contents of FSR to address data memory (not a physical register)								xxxx xxxx	25, 116
81h	OPTION_REG	$\overline{\text{GPPU}}$	INTEDG	T0CS	T0SE	PSA	PS2	PS1	PS0	1111 1111	19, 116
82h	PCL	Program Counter's (PC) Least Significant Byte								0000 0000	25, 116
83h	STATUS	IRP(1)	RP1(1)	RP0	$\overline{\text{TO}}$	$\overline{\text{PD}}$	Z	DC	C	0001 1xxx	18, 116
84h	FSR	Indirect Data Memory Address Pointer								xxxx xxxx	25, 116
85h	TRISIO	—	—	TRISIO5	TRISIO4	TRISIO3(4)	TRISIO2	TRISIO1	TRISIO0	--11 1111	44, 116
86h	—	Unimplemented								—	—
87h	—	Unimplemented								—	—
88h	—	Unimplemented								—	—
89h	—	Unimplemented								—	—
8Ah	PCLATH	—	—	—	Write Buffer for upper 5 bits of Program Counter					---0 0000	25, 116
8Bh	INTCON	GIE	PEIE	T0IE	INTE	GPIE	T0IF	INTF	GPIF(3)	0000 0000	20, 116
8Ch	PIE1	—	—	—	—	CMIE	—	—	TMR1IE	---- 0--0	21, 116
8Dh	—	Unimplemented								—	—
8Eh	PCON	—	—	—	—	—	—	$\overline{\text{POR}}$	$\overline{\text{BOR}}$	---- --qq	23, 116
8Fh	—	Unimplemented								—	—
90h	OSCTUNE	—	—	—	TUN4	TUN3	TUN2	TUN1	TUN0	---0 0000	41, 116
91h	—	Unimplemented								—	—
92h	—	Unimplemented								—	—
93h	—	Unimplemented								—	—
94h	—	Unimplemented								—	—
95h	WPU(2)	—	—	WPU5	WPU4	—	WPU2	WPU1	WPU0	--11 -111	46, 116
96h	IOC	—	—	IOC5	IOC4	IOC3	IOC2	IOC1	IOC0	--00 0000	46, 116
97h	—	Unimplemented								—	—
98h	—	Unimplemented								—	—
99h	—	Unimplemented								—	—
9Ah	—	Unimplemented								—	—
9Bh	—	Unimplemented								—	—
9Ch	—	Unimplemented								—	—
9Dh	—	Unimplemented								—	—
9Eh	—	Unimplemented								—	—
9Fh	ANSEL	—	—	—	—	ANS3	—	ANS1	ANS0	---- 1-11	45, 117

Legend: – = Unimplemented locations read as '0', u = unchanged, x = unknown, q = value depends on condition, shaded = unimplemented

Note 1: IRP and RP1 bits are reserved, always maintain these bits clear.

2: GP3 pull-up is enabled when MCLRE is '1' in the Configuration Word register.

3: MCLR and WDT Reset does not affect the previous value data latch. The GPIF bit will clear upon Reset but will set again if the mismatch exists.

4: TRISIO3 always reads as '1' since it is an input only pin.

© 2010 Microchip Technology Inc.

TABLE 2-4: PIC12F615/617/HV615 SPECIAL FUNCTION REGISTERS SUMMARY BANK 1

Addr	Name	Bit 7	Bit 6	Bit 5	Bit 4	Bit 3	Bit 2	Bit 1	Bit 0	Value on POR, BOR	Page
Bank 1											
80h	INDF	Addressing this location uses contents of FSR to address data memory (not a physical register)								xxxx xxxx	25, 116
81h	OPTION_REG	$\overline{\text{GPPU}}$	INTEDG	T0CS	T0SE	PSA	PS2	PS1	PS0	1111 1111	19, 116
82h	PCL	Program Counter's (PC) Least Significant Byte								0000 0000	25, 116
83h	STATUS	IRP(1)	RP1(1)	RP0	$\overline{\text{TO}}$	$\overline{\text{PD}}$	Z	DC	C	0001 1xxx	18, 116
84h	FSR	Indirect Data Memory Address Pointer								xxxx xxxx	25, 116
85h	TRISIO	—	—	TRISIO5	TRISIO4	TRISIO3(4)	TRISIO2	TRISIO1	TRISIO0	--11 1111	44, 116
86h	—	Unimplemented								—	—
87h	—	Unimplemented								—	—
88h	—	Unimplemented								—	—
89h	—	Unimplemented								—	—
8Ah	PCLATH	—	—	—	Write Buffer for upper 5 bits of Program Counter					---0 0000	25, 116
8Bh	INTCON	GIE	PEIE	T0IE	INTE	GPIE	T0IF	INTF	GPIF(3)	0000 0000	20, 116
8Ch	PIE1	—	ADIE	CCP1IE	—	CMIE	—	TMR2IE	TMR1IE	-00- 0-00	21, 116
8Dh	—	Unimplemented								—	—
8Eh	PCON	—	—	—	—	—	—	$\overline{\text{POR}}$	$\overline{\text{BOR}}$	---- --qq	23, 116
8Fh	—	Unimplemented								—	—
90h	OSCTUNE	—	—	—	TUN4	TUN3	TUN2	TUN1	TUN0	---0 0000	41, 116
91h	—	Unimplemented								—	—
92h	PR2	Timer2 Module Period Register								1111 1111	65, 116
93h	APFCON	—	—	—	T1GSEL	—	—	P1BSEL	P1ASEL	---0 --00	21, 116
94h	—	Unimplemented								—	—
95h	WPU(2)	—	—	WPU5	WPU4	—	WPU2	WPU1	WPU0	--11 -111	46, 116
96h	IOC	—	—	IOC5	IOC4	IOC3	IOC2	IOC1	IOC0	--00 0000	46, 116
97h	—	Unimplemented								—	—
98h	PMCON1(7)	—	—	—	—	—	WREN	WR	RD	---- -000	29
99h	PMCON2(7)	Program Memory Control Register 2 (not a physical register).								---- ----	—
9Ah	PMADRL(7)	PMADRL7	PMADRL6	PMADRL5	PMADRL4	PMADRL3	PMADRL2	PMADRL1	PMADRL0	0000 0000	28
9Bh	PMADRH(7)	—	—	—	—	—	PMADRH2	PMADRH1	PMADRH0	---- -000	28
9Ch	PMDATL(7)	PMDATL7	PMDATL6	PMDATL5	PMDATL4	PMDATL3	PMDATL2	PMDATL1	PMDATL0	0000 0000	28
9Dh	PMDATH(7)	—	—	Program Memory Data Register High Byte.						--00 0000	28
9Eh	ADRESL(5, 6)	Least Significant 2 bits of the left shifted result or 8 bits of the right shifted result								xxxx xxxx	85, 117
9Fh	ANSEL	—	ADCS2	ADCS1	ADCS0	ANS3	ANS2	ANS1	ANS0	-000 1111	45, 117

Legend: – = Unimplemented locations read as '0', u = unchanged, x = unknown, q = value depends on condition, shaded = unimplemented

Note 1: IRP and RP1 bits are reserved, always maintain these bits clear.

2: GP3 pull-up is enabled when MCLRE is '1' in the Configuration Word register.

3: $\overline{\text{MCLR}}$ and WDT Reset does not affect the previous value data latch. The GPIF bit will clear upon Reset but will set again if the mismatch exists.

4: TRISIO3 always reads as '1' since it is an input only pin.

5: Read only register.

6: PIC12F615/617/HV615 only.

7: PIC12F617 only.

2.2.2.1 STATUS Register

The STATUS register, shown in Register 2-1, contains:

- the arithmetic status of the ALU
- the Reset status
- the bank select bits for data memory (RAM)

The STATUS register can be the destination for any instruction, like any other register. If the STATUS register is the destination for an instruction that affects the Z, DC or C bits, then the write to these three bits is disabled. These bits are set or cleared according to the device logic. Furthermore, the $\overline{TO}$ and $\overline{PD}$ bits are not writable. Therefore, the result of an instruction with the STATUS register as destination may be different than intended.

For example, `CLRF STATUS,` will clear the upper three bits and set the Z bit. This leaves the STATUS register as `'000u u1uu'` (where u = unchanged).

It is recommended, therefore, that only `BCF, BSF, SWAPF` and `MOVWF` instructions are used to alter the STATUS register, because these instructions do not affect any Status bits. For other instructions not affecting any Status bits, see the **Section 14.0 "Instruction Set Summary"**.

> **Note 1:** Bits IRP and RP1 of the STATUS register are not used by the PIC12F609/615/617/12HV609/615 and should be maintained as clear. Use of these bits is not recommended, since this may affect upward compatibility with future products.
>
> **2:** The C and DC bits operate as a $\overline{Borrow}$ and $\overline{Digit\ Borrow}$ out bit, respectively, in subtraction. See the `SUBLW` and `SUBWF` instructions for examples.

REGISTER 2-1: STATUS: STATUS REGISTER

Reserved	Reserved	R/W-0	R-1	R-1	R/W-x	R/W-x	R/W-x
IRP	RP1	RP0	$\overline{TO}$	$\overline{PD}$	Z	DC	C
bit 7							bit 0

Legend:			
R = Readable bit	W = Writable bit	U = Unimplemented bit, read as '0'	
-n = Value at POR	'1' = Bit is set	'0' = Bit is cleared	x = Bit is unknown

bit 7 **IRP:** This bit is reserved and should be maintained as '0'

bit 6 **RP1:** This bit is reserved and should be maintained as '0'

bit 5 **RP0:** Register Bank Select bit (used for direct addressing)
1 = Bank 1 (80h – FFh)
0 = Bank 0 (00h – 7Fh)

bit 4 **$\overline{TO}$:** Time-out bit
1 = After power-up, `CLRWDT` instruction or `SLEEP` instruction
0 = A WDT time-out occurred

bit 3 **$\overline{PD}$:** Power-down bit
1 = After power-up or by the `CLRWDT` instruction
0 = By execution of the `SLEEP` instruction

bit 2 **Z:** Zero bit
1 = The result of an arithmetic or logic operation is zero
0 = The result of an arithmetic or logic operation is not zero

bit 1 **DC:** Digit Carry/$\overline{Borrow}$ bit (`ADDWF`, `ADDLW`, `SUBLW`, `SUBWF` instructions), For $\overline{Borrow}$, the polarity is reversed.
1 = A carry-out from the 4th low-order bit of the result occurred
0 = No carry-out from the 4th low-order bit of the result

bit 0 **C:** Carry/$\overline{Borrow}$ bit[(1)] (`ADDWF`, `ADDLW`, `SUBLW`, `SUBWF` instructions)
1 = A carry-out from the Most Significant bit of the result occurred
0 = No carry-out from the Most Significant bit of the result occurred

Note 1: For $\overline{Borrow}$, the polarity is reversed. A subtraction is executed by adding the two's complement of the second operand. For rotate (`RRF`, `RLF`) instructions, this bit is loaded with either the high-order or low-order bit of the source register.

© 2010 Microchip Technology Inc.

2.2.2.2 OPTION Register

The OPTION register is a readable and writable register, which contains various control bits to configure:

- Timer0/WDT prescaler
- External GP2/INT interrupt
- Timer0
- Weak pull-ups on GPIO

> **Note:** To achieve a 1:1 prescaler assignment for Timer0, assign the prescaler to the WDT by setting PSA bit to ‘1’ of the OPTION register. See **Section 6.1.3 “Software Programmable Prescaler”**.

REGISTER 2-2: OPTION_REG: OPTION REGISTER

R/W-1	R/W-1	R/W-1	R/W-1	R/W-1	R/W-1	R/W-1	R/W-1
$\overline{\text{GPPU}}$	INTEDG	T0CS	T0SE	PSA	PS2	PS1	PS0
bit 7							bit 0

Legend:			
R = Readable bit	W = Writable bit	U = Unimplemented bit, read as ‘0’	
-n = Value at POR	‘1’ = Bit is set	‘0’ = Bit is cleared	x = Bit is unknown

bit 7 **$\overline{\text{GPPU}}$:** GPIO Pull-up Enable bit
1 = GPIO pull-ups are disabled
0 = GPIO pull-ups are enabled by individual PORT latch values

bit 6 **INTEDG:** Interrupt Edge Select bit
1 = Interrupt on rising edge of GP2/INT pin
0 = Interrupt on falling edge of GP2/INT pin

bit 5 **T0CS:** Timer0 Clock Source Select bit
1 = Transition on GP2/T0CKI pin
0 = Internal instruction cycle clock (FOSC/4)

bit 4 **T0SE:** Timer0 Source Edge Select bit
1 = Increment on high-to-low transition on GP2/T0CKI pin
0 = Increment on low-to-high transition on GP2/T0CKI pin

bit 3 **PSA:** Prescaler Assignment bit
1 = Prescaler is assigned to the WDT
0 = Prescaler is assigned to the Timer0 module

bit 2-0 **PS<2:0>:** Prescaler Rate Select bits

BIT VALUE	TIMER0 RATE	WDT RATE
000	1 : 2	1 : 1
001	1 : 4	1 : 2
010	1 : 8	1 : 4
011	1 : 16	1 : 8
100	1 : 32	1 : 16
101	1 : 64	1 : 32
110	1 : 128	1 : 64
111	1 : 256	1 : 128

2.2.2.3 INTCON Register

The INTCON register is a readable and writable register, which contains the various enable and flag bits for TMR0 register overflow, GPIO change and external GP2/INT pin interrupts.

> **Note:** Interrupt flag bits are set when an interrupt condition occurs, regardless of the state of its corresponding enable bit or the Global Enable bit, GIE of the INTCON register. User software should ensure the appropriate interrupt flag bits are clear prior to enabling an interrupt.

REGISTER 2-3: INTCON: INTERRUPT CONTROL REGISTER

R/W-0	R/W-0	R/W-0	R/W-0	R/W-0	R/W-0	R/W-0	R/W-0
GIE	PEIE	T0IE	INTE	GPIE	T0IF	INTF	GPIF
bit 7							bit 0

Legend:			
R = Readable bit	W = Writable bit	U = Unimplemented bit, read as ‘0’	
-n = Value at POR	‘1’ = Bit is set	‘0’ = Bit is cleared	x = Bit is unknown

bit 7 **GIE:** Global Interrupt Enable bit
`1` = Enables all unmasked interrupts
`0` = Disables all interrupts

bit 6 **PEIE:** Peripheral Interrupt Enable bit
`1` = Enables all unmasked peripheral interrupts
`0` = Disables all peripheral interrupts

bit 5 **T0IE:** Timer0 Overflow Interrupt Enable bit
`1` = Enables the Timer0 interrupt
`0` = Disables the Timer0 interrupt

bit 4 **INTE:** GP2/INT External Interrupt Enable bit
`1` = Enables the GP2/INT external interrupt
`0` = Disables the GP2/INT external interrupt

bit 3 **GPIE:** GPIO Change Interrupt Enable bit(1)
`1` = Enables the GPIO change interrupt
`0` = Disables the GPIO change interrupt

bit 2 **T0IF:** Timer0 Overflow Interrupt Flag bit(2)
`1` = Timer0 register has overflowed (must be cleared in software)
`0` = Timer0 register did not overflow

bit 1 **INTF:** GP2/INT External Interrupt Flag bit
`1` = The GP2/INT external interrupt occurred (must be cleared in software)
`0` = The GP2/INT external interrupt did not occur

bit 0 **GPIF:** GPIO Change Interrupt Flag bit
`1` = When at least one of the GPIO <5:0> pins changed state (must be cleared in software)
`0` = None of the GPIO <5:0> pins have changed state

Note 1: IOC register must also be enabled.
2: T0IF bit is set when TMR0 rolls over. TMR0 is unchanged on Reset and should be initialized before clearing T0IF bit.

© 2010 Microchip Technology Inc.

2.2.2.4 PIE1 Register

The PIE1 register contains the Peripheral Interrupt Enable bits, as shown in Register 2-4.

Note: Bit PEIE of the INTCON register must be set to enable any peripheral interrupt.

REGISTER 2-4: PIE1: PERIPHERAL INTERRUPT ENABLE REGISTER 1

U-0	R/W-0	R/W-0	U-0	R/W-0	U-0	R/W-0	R/W-0
—	ADIE(1)	CCP1IE(1)	—	CMIE	—	TMR2IE(1)	TMR1IE
bit 7							bit 0

Legend:			
R = Readable bit	W = Writable bit	U = Unimplemented bit, read as ‘0’	
-n = Value at POR	‘1’ = Bit is set	‘0’ = Bit is cleared	x = Bit is unknown

bit 7 **Unimplemented:** Read as ‘0’

bit 6 **ADIE:** A/D Converter (ADC) Interrupt Enable bit(1)
1 = Enables the ADC interrupt
0 = Disables the ADC interrupt

bit 5 **CCP1IE:** CCP1 Interrupt Enable bit(1)
1 = Enables the CCP1 interrupt
0 = Disables the CCP1 interrupt

bit 4 **Unimplemented:** Read as ‘0’

bit 3 **CMIE:** Comparator Interrupt Enable bit
1 = Enables the Comparator interrupt
0 = Disables the Comparator interrupt

bit 2 **Unimplemented:** Read as ‘0’

bit 1 **TMR2IE:** Timer2 to PR2 Match Interrupt Enable bit(1)
1 = Enables the Timer2 to PR2 match interrupt
0 = Disables the Timer2 to PR2 match interrupt

bit 0 **TMR1IE:** Timer1 Overflow Interrupt Enable bit
1 = Enables the Timer1 overflow interrupt
0 = Disables the Timer1 overflow interrupt

Note 1: PIC12F615/617/HV615 only. PIC12F609/HV609 unimplemented, read as ‘0’.

2.2.2.5 PIR1 Register

The PIR1 register contains the Peripheral Interrupt flag bits, as shown in Register 2-5.

Note:	Interrupt flag bits are set when an interrupt condition occurs, regardless of the state of its corresponding enable bit or the Global Enable bit, GIE of the INTCON register. User software should ensure the appropriate interrupt flag bits are clear prior to enabling an interrupt.

REGISTER 2-5: PIR1: PERIPHERAL INTERRUPT REQUEST REGISTER 1

U-0	R/W-0	R/W-0	U-0	R/W-0	U-0	R/W-0	R/W-0
—	ADIF(1)	CCP1IF(1)	—	CMIF	—	TMR2IF(1)	TMR1IF
bit 7							bit 0

Legend:			
R = Readable bit	W = Writable bit	U = Unimplemented bit, read as ‘0’	
-n = Value at POR	‘1’ = Bit is set	‘0’ = Bit is cleared	x = Bit is unknown

bit 7 **Unimplemented:** Read as ‘0’

bit 6 **ADIF:** A/D Interrupt Flag bit(1)
1 = A/D conversion complete
0 = A/D conversion has not completed or has not been started

bit 5 **CCP1IF:** CCP1 Interrupt Flag bit(1)
Capture mode:
1 = A TMR1 register capture occurred (must be cleared in software)
0 = No TMR1 register capture occurred
Compare mode:
1 = A TMR1 register compare match occurred (must be cleared in software)
0 = No TMR1 register compare match occurred
PWM mode:
Unused in this mode

bit 4 **Unimplemented:** Read as ‘0’

bit 3 **CMIF:** Comparator Interrupt Flag bit
1 = Comparator output has changed (must be cleared in software)
0 = Comparator output has not changed

bit 2 **Unimplemented:** Read as ‘0’

bit 1 **TMR2IF:** Timer2 to PR2 Match Interrupt Flag bit(1)
1 = Timer2 to PR2 match occurred (must be cleared in software)
0 = Timer2 to PR2 match has not occurred

bit 0 **TMR1IF:** Timer1 Overflow Interrupt Flag bit
1 = Timer1 register overflowed (must be cleared in software)
0 = Timer1 has not overflowed

Note 1: PIC12F615/617/HV615 only. PIC12F609/HV609 unimplemented, read as ‘0’.

© 2010 Microchip Technology Inc.

2.2.2.6 PCON Register

The Power Control (PCON) register (see Table 12-2) contains flag bits to differentiate between a:

- Power-on Reset ($\overline{\text{POR}}$)
- Brown-out Reset ($\overline{\text{BOR}}$)
- Watchdog Timer Reset (WDT)
- External $\overline{\text{MCLR}}$ Reset

The PCON register also controls the software enable of the $\overline{\text{BOR}}$.

The PCON register bits are shown in Register 2-6.

REGISTER 2-6: PCON: POWER CONTROL REGISTER

U-0	U-0	U-0	U-0	U-0	U-0	R/W-0	R/W-0(1)
—	—	—	—	—	—	$\overline{\text{POR}}$	$\overline{\text{BOR}}$
bit 7							bit 0

Legend:			
R = Readable bit	W = Writable bit	U = Unimplemented bit, read as ‘0’	
-n = Value at POR	‘1’ = Bit is set	‘0’ = Bit is cleared	x = Bit is unknown

bit 7-2 **Unimplemented:** Read as ‘0’

bit 1 **$\overline{\text{POR}}$:** Power-on Reset Status bit
1 = No Power-on Reset occurred
0 = A Power-on Reset occurred (must be set in software after a Power-on Reset occurs)

bit 0 **$\overline{\text{BOR}}$:** Brown-out Reset Status bit
1 = No Brown-out Reset occurred
0 = A Brown-out Reset occurred (must be set in software after a Brown-out Reset occurs)

Note 1: Reads as ‘0’ if Brown-out Reset is disabled.

2.2.2.7 APFCON Register (PIC12F615/617/HV615 only)

The Alternate Pin Function Control (APFCON) register is used to steer specific peripheral input and output functions between different pins. For this device, the P1A, P1B and Timer1 Gate functions can be moved between different pins.

The APFCON register bits are shown in Register 2-7.

REGISTER 2-7: APFCON:ALTERNATE PIN FUNCTION REGISTER(1)

U-0	U-0	U-0	R/W-0	U-0	U-0	R/W-0	R/W-0
—	—	—	T1GSEL	—	—	P1BSEL	P1ASEL
bit 7							bit 0

Legend:			
R = Readable bit	W = Writable bit	U = Unimplemented bit, read as ‘0’	
-n = Value at POR	‘1’ = Bit is set	‘0’ = Bit is cleared	x = Bit is unknown

bit 7-5 **Unimplemented:** Read as ‘0’

bit 4 **T1GSEL:** TMR1 Input Pin Select bit
1 = T1G function is on GP3/$\overline{\text{T1G}}$(2)/$\overline{\text{MCLR}}$/VPP
0 = T1G function is on GP4/AN3/CIN1-/$\overline{\text{T1G}}$/P1B(2)/OSC2/CLKOUT

bit 3-2 **Unimplemented:** Read as ‘0’

bit 1 **P1BSEL:** P1B Output Pin Select bit
1 = P1B function is on GP4/AN3/CIN1-/$\overline{\text{T1G}}$/P1B(2)/OSC2/CLKOUT
0 = P1B function is on GP0/AN0/CIN+/P1B/ICSPDAT

bit 0 **P1ASEL:** P1A Output Pin Select bit
1 = P1A function is on GP5/T1CKI/P1A(2)/OSC1/CLKIN
0 = P1A function is on GP2/AN2/T0CKI/INT/COUT/CCP1/P1A

Note 1: PIC12F615/617/HV615 only.

2: Alternate pin function.

© 2010 Microchip Technology Inc.

2.3 PCL and PCLATH

The Program Counter (PC) is 13 bits wide. The low byte comes from the PCL register, which is a readable and writable register. The high byte (PC<12:8>) is not directly readable or writable and comes from PCLATH. On any Reset, the PC is cleared. Figure 2-5 shows the two situations for the loading of the PC. The upper example in Figure 2-5 shows how the PC is loaded on a write to PCL (PCLATH<4:0> → PCH). The lower example in Figure 2-5 shows how the PC is loaded during a `CALL` or `GOTO` instruction (PCLATH<4:3> → PCH).

FIGURE 2-5: LOADING OF PC IN DIFFERENT SITUATIONS

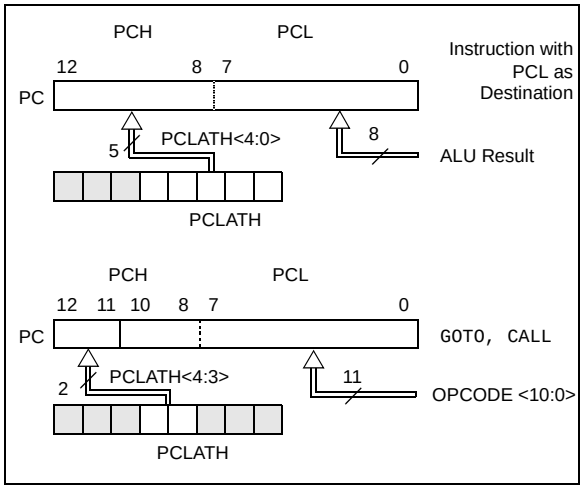

2.3.1 MODIFYING PCL

Executing any instruction with the PCL register as the destination simultaneously causes the Program Counter PC<12:8> bits (PCH) to be replaced by the contents of the PCLATH register. This allows the entire contents of the program counter to be changed by writing the desired upper 5 bits to the PCLATH register. When the lower 8 bits are written to the PCL register, all 13 bits of the program counter will change to the values contained in the PCLATH register and those being written to the PCL register.

A computed `GOTO` is accomplished by adding an offset to the program counter (`ADDWF PCL`). Care should be exercised when jumping into a look-up table or program branch table (computed `GOTO`) by modifying the PCL register. Assuming that PCLATH is set to the table start address, if the table length is greater than 255 instructions or if the lower 8 bits of the memory address rolls over from 0xFF to 0x00 in the middle of the table, then PCLATH must be incremented for each address rollover that occurs between the table beginning and the target location within the table.

For more information refer to Application Note AN556, "*Implementing a Table Read*" (DS00556).

2.3.2 STACK

The PIC12F609/615/617/12HV609/615 Family has an 8-level x 13-bit wide hardware stack (see Figure 2-1). The stack space is not part of either program or data space and the Stack Pointer is not readable or writable. The PC is PUSHed onto the stack when a `CALL` instruction is executed or an interrupt causes a branch. The stack is POPed in the event of a `RETURN, RETLW` or a `RETFIE` instruction execution. PCLATH is not affected by a PUSH or POP operation.

The stack operates as a circular buffer. This means that after the stack has been PUSHed eight times, the ninth push overwrites the value that was stored from the first push. The tenth push overwrites the second push (and so on).

> **Note 1:** There are no Status bits to indicate stack overflow or stack underflow conditions.
>
> **2:** There are no instructions/mnemonics called PUSH or POP. These are actions that occur from the execution of the `CALL, RETURN, RETLW` and `RETFIE` instructions or the vectoring to an interrupt address.

2.4 Indirect Addressing, INDF and FSR Registers

The INDF register is not a physical register. Addressing the INDF register will cause indirect addressing.

Indirect addressing is possible by using the INDF register. Any instruction using the INDF register actually accesses data pointed to by the File Select Register (FSR). Reading INDF itself indirectly will produce 00h. Writing to the INDF register indirectly results in a no operation (although Status bits may be affected). An effective 9-bit address is obtained by concatenating the 8-bit FSR and the IRP bit of the STATUS register, as shown in Figure 2-6.

A simple program to clear RAM location 40h-7Fh using indirect addressing is shown in Example 2-1.

EXAMPLE 2-1: INDIRECT ADDRESSING

```
        MOVLW   0x40    ;initialize pointer
        MOVWF   FSR     ;to RAM
NEXT    CLRF    INDF    ;clear INDF register
        INCF    FSR     ;inc pointer
        BTFSS   FSR,7   ;all done?
        GOTO    NEXT    ;no clear next
CONTINUE                ;yes continue
```

FIGURE 2-6: DIRECT/INDIRECT ADDRESSING PIC12F609/615/617/12HV609/615

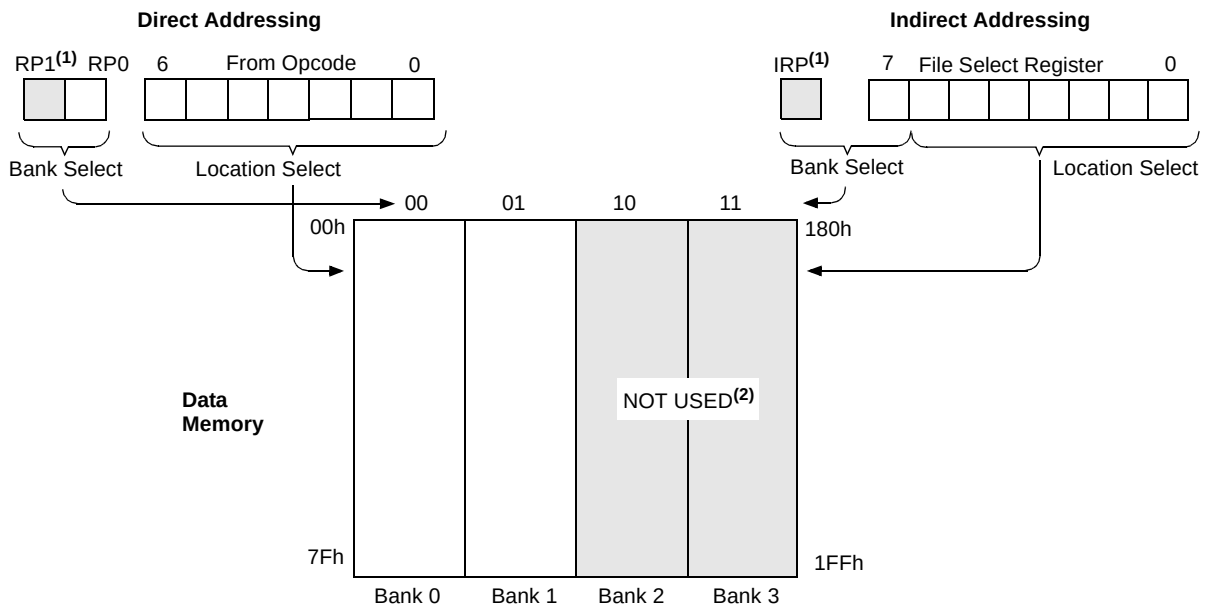

For memory map detail, see Figure 2-3.

Note 1: The RP1 and IRP bits are reserved; always maintain these bits clear.

2: Accesses in this area are mirrored back into Bank 0 and Bank 1.

© 2010 Microchip Technology Inc.

3.0 FLASH PROGRAM MEMORY SELF READ/SELF WRITE CONTROL (FOR PIC12F617 ONLY)

The Flash program memory is readable and writable during normal operation (full V_{DD} range). This memory is not directly mapped in the register file space. Instead, it is indirectly addressed through the Special Function Registers (see Registers 3-1 to 3-5). There are six SFRs used to read and write this memory:

- PMCON1
- PMCON2
- PMDATL
- PMDATH
- PMADRL
- PMADRH

When interfacing the program memory block, the PMDATL and PMDATH registers form a two-byte word which holds the 14-bit data for read/write, and the PMADRL and PMADRH registers form a two-byte word which holds the 13-bit address of the Flash location being accessed. These devices have 2K words of program Flash with an address range from 0000h to 07FFh.

The program memory allows single word read and a by four word write. A four word write automatically erases the row of the location and writes the new data (erase before write).

The write time is controlled by an on-chip timer. The write/erase voltages are generated by an on-chip charge pump rated to operate over the voltage range of the device for byte or word operations.

When the device is code-protected, the CPU may continue to read and write the Flash program memory.

Depending on the settings of the Flash Program Memory Enable (WRT<1:0>) bits, the device may or may not be able to write certain blocks of the program memory, however, reads of the program memory are allowed.

When the Flash program memory Code Protection ($\overline{CP}$) bit in the Configuration Word register is enabled, the program memory is code-protected, and the device programmer (ICSP™) cannot access data or program memory.

3.1 PMADRH and PMADRL Registers

The PMADRH and PMADRL registers can address up to a maximum of 8K words of program memory.

When selecting a program address value, the Most Significant Byte (MSB) of the address is written to the PMADRH register and the Least Significant Byte (LSB) is written to the PMADRL register.

3.2 PMCON1 and PMCON2 Registers

PMCON1 is the control register for the data program memory accesses.

Control bits RD and WR initiate read and write, respectively. These bits cannot be cleared, only set in software. They are cleared in hardware at completion of the read or write operation. The inability to clear the WR bit in software prevents the accidental premature termination of a write operation.

The WREN bit, when set, will allow a write operation. On power-up, the WREN bit is clear.

PMCON2 is not a physical register. Reading PMCON2 will read all ‘0’s. The PMCON2 register is used exclusively in the Flash memory write sequence.

REGISTER 3-1: PMDATL: PROGRAM MEMORY DATA REGISTER

R/W-0	R/W-0	R/W-0	R/W-0	R/W-0	R/W-0	R/W-0	R/W-0
PMDATL7	PMDATL6	PMDATL5	PMDATL4	PMDATL3	PMDATL2	PMDATL1	PMDATL0
bit 7							bit 0

Legend:			
R = Readable bit	W = Writable bit	U = Unimplemented bit, read as ‘0’	
-n = Value at POR	‘1’ = Bit is set	‘0’ = Bit is cleared	x = Bit is unknown

bit 7-0 **PMDATL<7:0>**: 8 Least Significant Address bits to Write or Read from Program Memory

REGISTER 3-2: PMADRL: PROGRAM MEMORY ADDRESS REGISTER

R/W-0	R/W-0	R/W-0	R/W-0	R/W-0	R/W-0	R/W-0	R/W-0
PMADRL7	PMADRL6	PMADRL5	PMADRL4	PMADRL3	PMADRL2	PMADRL1	PMADRL0
bit 7							bit 0

Legend:			
R = Readable bit	W = Writable bit	U = Unimplemented bit, read as ‘0’	
-n = Value at POR	‘1’ = Bit is set	‘0’ = Bit is cleared	x = Bit is unknown

bit 7-0 **PMADRL<7:0>**: 8 Least Significant Address bits for Program Memory Read/Write Operation

REGISTER 3-3: PMDATH: PROGRAM MEMORY DATA HIGH BYTE REGISTER

U-0	U-0	R/W-0	R/W-0	R/W-0	R/W-0	R/W-0	R/W-0
—	—	PMDATH5	PMDATH4	PMDATH3	PMDATH2	PMDATH1	PMDATH0
bit 7							bit 0

Legend:			
R = Readable bit	W = Writable bit	U = Unimplemented bit, read as ‘0’	
-n = Value at POR	‘1’ = Bit is set	‘0’ = Bit is cleared	x = Bit is unknown

bit 7-6 **Unimplemented:** Read as ‘0’

bit 5-0 **PMDATH<5:0>**: 6 Most Significant Data bits from Program Memory

REGISTER 3-4: PMADRH: PROGRAM MEMORY ADDRESS HIGH BYTE REGISTER

U-0	U-0	U-0	U-0	U-0	R/W-0	R/W-0	R/W-0
—	—	—	—	—	PMADRH2	PMADRH1	PMADRH0
bit 7							bit 0

Legend:			
R = Readable bit	W = Writable bit	U = Unimplemented bit, read as ‘0’	
-n = Value at POR	‘1’ = Bit is set	‘0’ = Bit is cleared	x = Bit is unknown

bit 3 **Unimplemented:** Read as ‘0’

bit 2-0 **PMADRH<2:0>**: Specifies the 3 Most Significant Address bits or high bits for program memory reads.

© 2010 Microchip Technology Inc.

REGISTER 3-5: PMCON1 – PROGRAM MEMORY CONTROL REGISTER 1 (ADDRESS: 93h)

U-1	U-0	U-0	U-0	U-0	R/W-0	R/S-0	R/S-0
—	—	—	—	—	WREN	WR	RD
bit 7							bit 0

bit 7 **Unimplemented:** Read as '1'

bit 6-3 **Unimplemented:** Read as '0'

bit 2 **WREN:** Program Memory Write Enable bit

1 = Allows write cycles
0 = Inhibits write to the EEPROM

bit 1 **WR:** Write Control bit

1 = Initiates a write cycle to program memory. (The bit is cleared by hardware when write is complete. The WR bit can only be set (not cleared) in software.)
0 = Write cycle to the Flash memory is complete

bit 0 **RD:** Read Control bit

1 = Initiates a program memory read (The read takes one cycle. The RD is cleared in hardware; the RD bit can only be set (not cleared) in software).
0 = Does not initiate a Flash memory read

Legend:			
R = Readable bit	W = Writable bit	U = Unimplemented bit, read as '0'	
-n = Value at POR	1 = bit is set	0 = bit is cleared	x = bit is unknown

3.3 Reading the Flash Program Memory

To read a program memory location, the user must write two bytes of the address to the PMADRL and PMADRH registers, and then set control bit RD (PMCON1<0>). Once the read control bit is set, the program memory Flash controller will use the second instruction cycle after to read the data. This causes the second instruction immediately following the "`BSF PMCON1,RD`" instruction to be ignored. The data is available in the very next cycle in the PMDATL and PMDATH registers; it can be read as two bytes in the following instructions. PMDATL and PMDATH registers will hold this value until another read or until it is written to by the user (during a write operation).

EXAMPLE 3-1: FLASH PROGRAM READ

```
BANKSEL PM_ADR            ; Change STATUS bits RP1:0 to select bank with PMADRL
MOVLW   MS_PROG_PM_ADDR   ;
MOVWF   PMADRH            ; MS Byte of Program Address to read
MOVLW   LS_PROG_PM_ADDR   ;
MOVWF   PMADRL            ; LS Byte of Program Address to read
BANKSEL PMCON1            ; Bank to containing PMCON1
BSF     PMCON1, RD        ; PM Read

NOP                       ; First instruction after BSF PMCON1,RD executes normally

NOP                       ; Any instructions here are ignored as program
                          ; memory is read in second cycle after BSF PMCON1,RD
                          ;
BANKSEL PMDATL            ; Bank to containing PMADRL
MOVF    PMDATL, W         ; W = LS Byte of Program PMDATL
MOVF    PMDATH, W         ; W = MS Byte of Program PMDATL
```


© 2010 Microchip Technology Inc.

FIGURE 3-1: FLASH PROGRAM MEMORY READ CYCLE EXECUTION

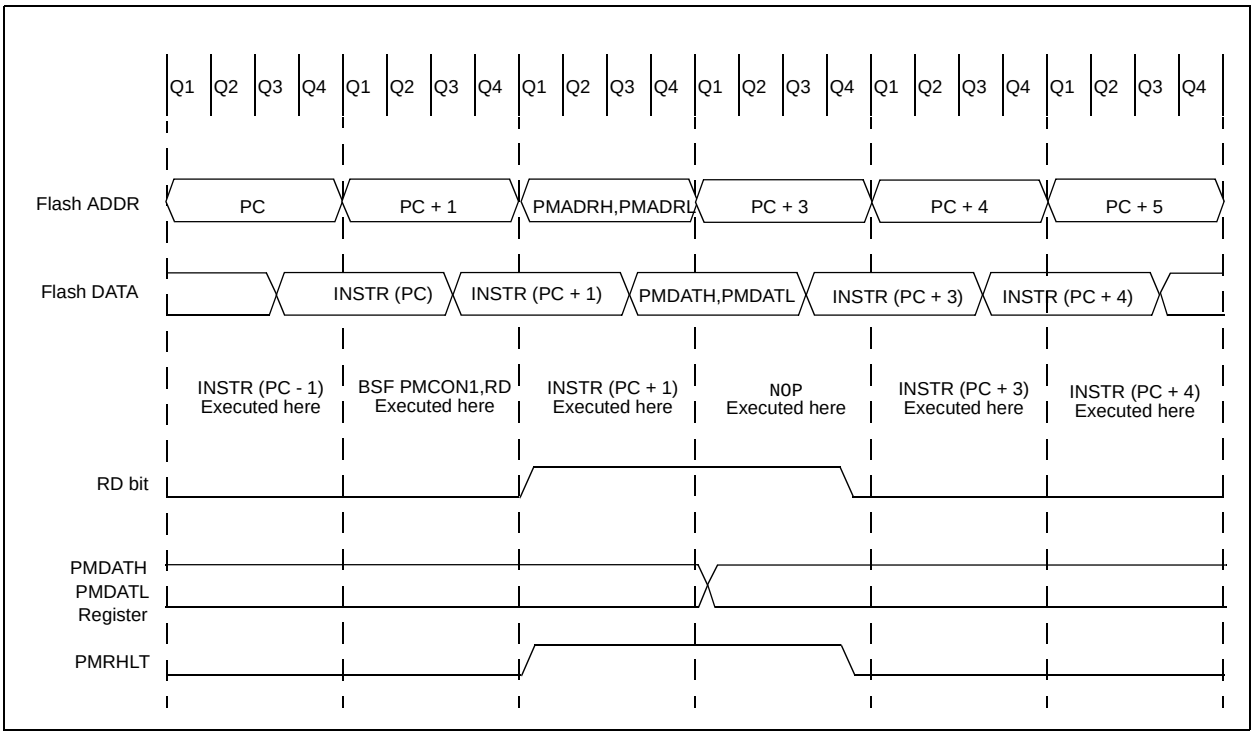

3.4 Writing the Flash Program Memory

A word of the Flash program memory may only be written to if the word is in an unprotected segment of memory.

Flash program memory must be written in four-word blocks. See Figure 3-2 and Figure 3-3 for more details. A block consists of four words with sequential addresses, with a lower boundary defined by an address, where PMADRL<1:0> = 00. All block writes to program memory are done as 16-word erase by four-word write operations. The write operation is edge-aligned and cannot occur across boundaries.

To write program data, it must first be loaded into the buffer registers (see Figure 3-2). This is accomplished by first writing the destination address to PMADRL and PMADRH and then writing the data to PMDATL and PMDATH. After the address and data have been set up, then the following sequence of events must be executed:

1. Write 55h, then AAh, to PMCON2 (Flash programming sequence).
2. Set the WR control bit of the PMCON1 register.

All four buffer register locations should be written to with correct data. If less than four words are being written to in the block of four words, then a read from the program memory location(s) not being written to must be performed. This takes the data from the program location(s) not being written and loads it into the PMDATL and PMDATH registers. Then the sequence of events to transfer data to the buffer registers must be executed.

To transfer data from the buffer registers to the program memory, the PMADRL and PMADRH must point to the last location in the four-word block (PMADRL<1:0> = 11). Then the following sequence of events must be executed:

1. Write 55h, then AAh, to PMCON2 (Flash programming sequence).
2. Set control bit WR of the PMCON1 register to begin the write operation.

The user must follow the same specific sequence to initiate the write for each word in the program block, writing each program word in sequence (000, 001, 010, 011). When the write is performed on the last word (PMADRL<1:0> = 11), a block of sixteen words is automatically erased and the content of the four-word buffer registers are written into the program memory.

After the "BSF PMCON1,WR" instruction, the processor requires two cycles to set up the erase/write operation. The user must place two NOP instructions after the WR bit is set. Since data is being written to buffer registers, the writing of the first three words of the block appears to occur immediately. The processor will halt internal operations for the typical 4 ms, only during the cycle in which the erase takes place (i.e., the last word of the sixteen-word block erase). This is not Sleep mode as the clocks and peripherals will continue to run. After the four-word write cycle, the processor will resume operation with the third instruction after the PMCON1 write instruction. The above sequence must be repeated for the higher 12 words.

3.5 Protection Against Spurious Write

There are conditions when the device should not write to the program memory. To protect against spurious writes, various mechanisms have been built in. On power-up, WREN is cleared. Also, the Power-up Timer (64 ms duration) prevents program memory writes.

The write initiate sequence and the WREN bit help prevent an accidental write during brown-out, power glitch or software malfunction.

3.6 Operation During Code-Protect

When the device is code-protected, the CPU is able to read and write unscrambled data to the program memory. The test mode access is disabled.

3.7 Operation During Write Protect

When the program memory is write-protected, the CPU can read and execute from the program memory. The portions of program memory that are write protected can be modified by the CPU using the PMCON registers, but the protected program memory cannot be modified using ICSP mode.

© 2010 Microchip Technology Inc.

FIGURE 3-2: BLOCK WRITES TO 2K FLASH PROGRAM MEMORY

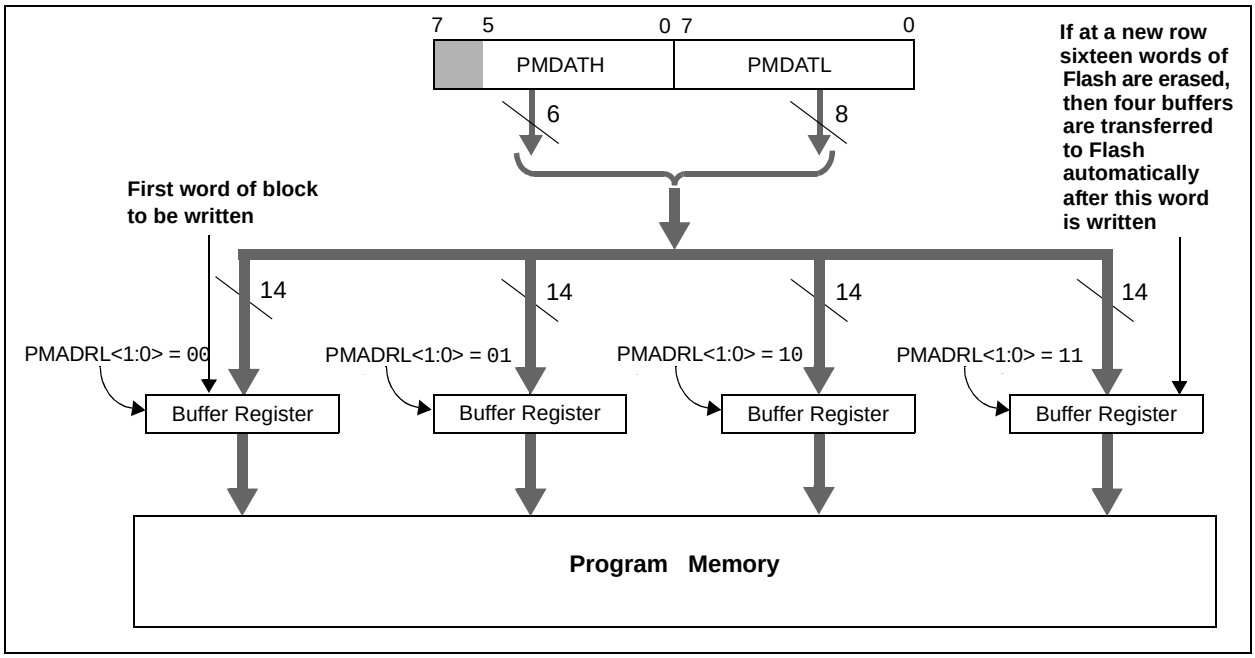

FIGURE 3-3: FLASH PROGRAM MEMORY LONG WRITE CYCLE EXECUTION

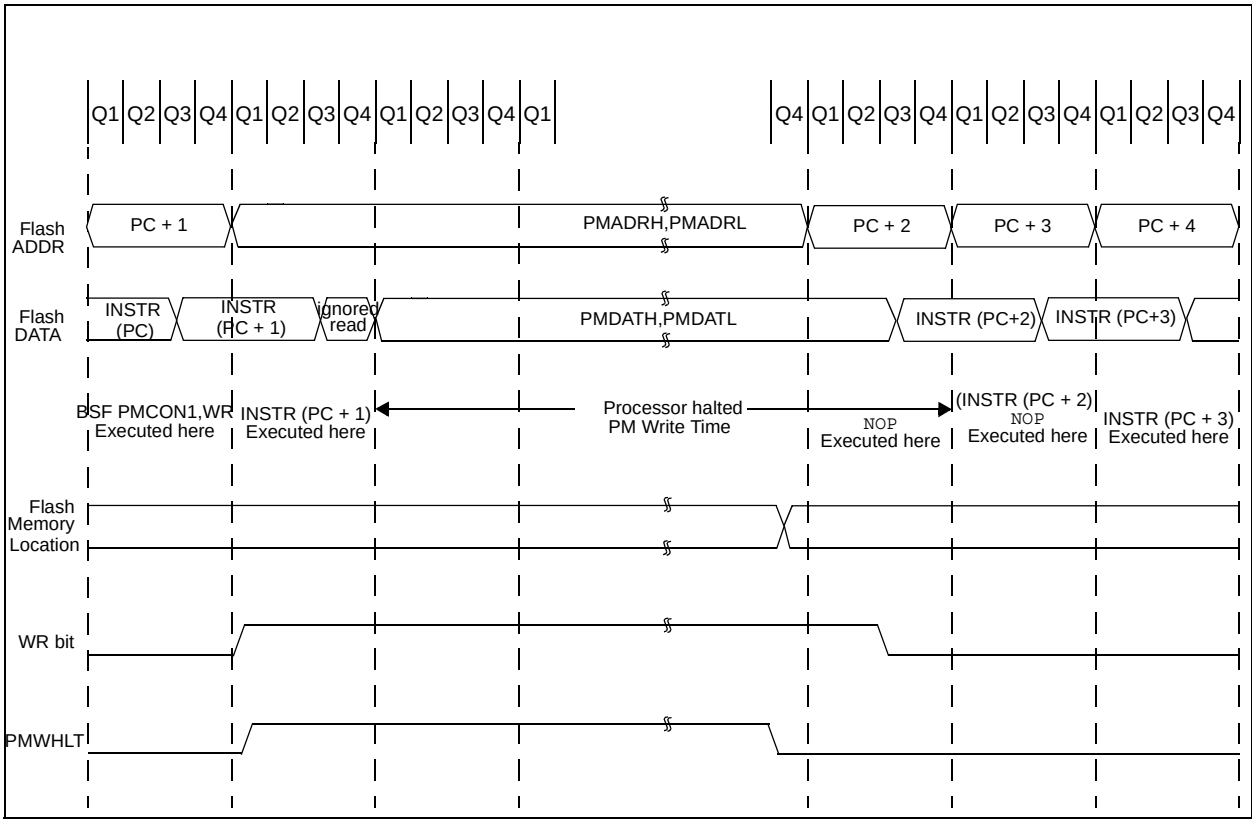

An example of the complete four-word write sequence is shown in Example 3-2. The initial address is loaded into the PMADRH and PMADRL register pair; the eight words of data are loaded using indirect addressing.

EXAMPLE 3-2: WRITING TO FLASH PROGRAM MEMORY

```
        ;;;;;;;;;;;;;;;;;;;;;;;;;;;;;;;;;;;;;;;;;;;;;;;;;;;;;;;;;;;;;;;;;;;;;;;;;;;;;;;;;
        ; This write routine assumes the following:
        ;     A valid starting address (the least significant bits = '00')
        ;     is loaded in ADDRH:ADDRL
        ;     ADDRH, ADDRL and DATADDR are all located in data memory
        ;
        BANKSEL  PMADRH
        MOVF     ADDRH,W      ; Load initial address
        MOVWF    PMADRH       ;
        MOVF     ADDRL,W      ;
        MOVWF    PMADRL       ;
        MOVF     DATAADDR,W   ; Load initial data address
        MOVWF    FSR          ;
LOOP    MOVF     INDF,W       ; Load first data byte into lower
        MOVWF    PMDATL       ;
        INCF     FSR,F        ; Next byte
        MOVF     INDF,W       ; Load second data byte into upper
        MOVWF    PMDATH       ;
        INCF     FSR,F        ;
        BANKSEL  PMCON1
        BSF      PMCON1,WREN  ; Enable writes
        BCF      INTCON,GIE   ; Disable interrupts (if using)
        BTFSC    INTCON,GIE   ; See AN576
        GOTO     $-2
        ;;;;;;;;;;;;;;;;;;;;;;;;;;;;;;;;;;;;;;;;;;;;;;;;;;;;;;;;;;;;;;;;;;;;;;;;;;;;;;;;;
        ;                        Required Sequence
        MOVLW    55h          ; Start of required write sequence:
        MOVWF    PMCON2       ; Write 55h
        MOVLW    0AAh         ;
        MOVWF    PMCON2       ; Write 0AAh
        BSF      PMCON1,WR    ; Set WR bit to begin write
        NOP                   ; Required to transfer data to the buffer
        NOP                   ; registers
        ;;;;;;;;;;;;;;;;;;;;;;;;;;;;;;;;;;;;;;;;;;;;;;;;;;;;;;;;;;;;;;;;;;;;;;;;;;;;;;;;;
        BCF      PMCON1,WREN  ; Disable writes
        BSF      INTCON,GIE   ; Enable interrupts (comment out if not using interrupts)
        BANKSEL  PMADRL
        MOVF     PMADRL, W
        INCF     PMADRL,F     ; Increment address
        ANDLW    0x03         ; Indicates when sixteen words have been programmed
        SUBLW    0x03         ;   0x0F = 16 words
                              ;   0x0B = 12 words
                              ;   0x07 = 8 words
                              ;   0x03 = 4 words
        BTFSS    STATUS,Z     ; Exit on a match,
        GOTO     LOOP         ; Continue if more data needs to be written
```


© 2010 Microchip Technology Inc.

TABLE 3-1: SUMMARY OF REGISTERS ASSOCIATED WITH PROGRAM MEMORY

Name	Bit 7	Bit 6	Bit 5	Bit 4	Bit 3	Bit 2	Bit 1	Bit 0	Value on POR, BOR	Value on all other Resets
PMCON1	—	—	—	—	—	WREN	WR	RD	---- -000	---- -000
PMCON2	Program Memory Control Register 2 (not a physical register)								---- ----	---- ----
PMADRL	PMADRL7	PMADRL6	PMADRL5	PMADRL4	PMADRL3	PMADRL2	PMADRL1	PMADRL0	0000 0000	0000 0000
PMADRH	—	—	—	—	—	PMADRH2	PMADRH1	PMADRH0	---- -000	---- -000
PMDATL	PMDATL7	PMDATL6	PMDATL5	PMDATL4	PMDATL3	PMDATL2	PMDATL1	PMDATL0	0000 0000	0000 0000
PMDATH	—	—	PMDATH5	PMDATH4	PMDATH3	PMDATH2	PMDATH1	PMDATH0	--00 0000	--00 0000

Legend: x = unknown, u = unchanged, – = unimplemented read as '0', q = value depends upon condition.
Shaded cells are not used by Program Memory module.

NOTES:

© 2010 Microchip Technology Inc.

4.0 OSCILLATOR MODULE

4.1 Overview

The Oscillator module has a wide variety of clock sources and selection features that allow it to be used in a wide range of applications while maximizing performance and minimizing power consumption. Figure 4-1 illustrates a block diagram of the Oscillator module.

Clock sources can be configured from external oscillators, quartz crystal resonators, ceramic resonators and Resistor-Capacitor (RC) circuits. In addition, the system clock source can be configured with a choice of two selectable speeds: internal or external system clock source.

The Oscillator module can be configured in one of eight clock modes.

3. EC – External clock with I/O on OSC2/CLKOUT.
4. LP – 32 kHz Low-Power Crystal mode.
5. XT – Medium Gain Crystal or Ceramic Resonator Oscillator mode.
6. HS – High Gain Crystal or Ceramic Resonator mode.
7. RC – External Resistor-Capacitor (RC) with FOSC/4 output on OSC2/CLKOUT.
8. RCIO – External Resistor-Capacitor (RC) with I/O on OSC2/CLKOUT.
9. INTOSC – Internal oscillator with FOSC/4 output on OSC2 and I/O on OSC1/CLKIN.
10. INTOSCIO – Internal oscillator with I/O on OSC1/CLKIN and OSC2/CLKOUT.

Clock Source modes are configured by the FOSC<2:0> bits in the Configuration Word register (CONFIG). The Internal Oscillator module provides a selectable system clock mode of either 4 MHz (Postscaler) or 8 MHz (INTOSC).

FIGURE 4-1: PIC® MCU CLOCK SOURCE BLOCK DIAGRAM

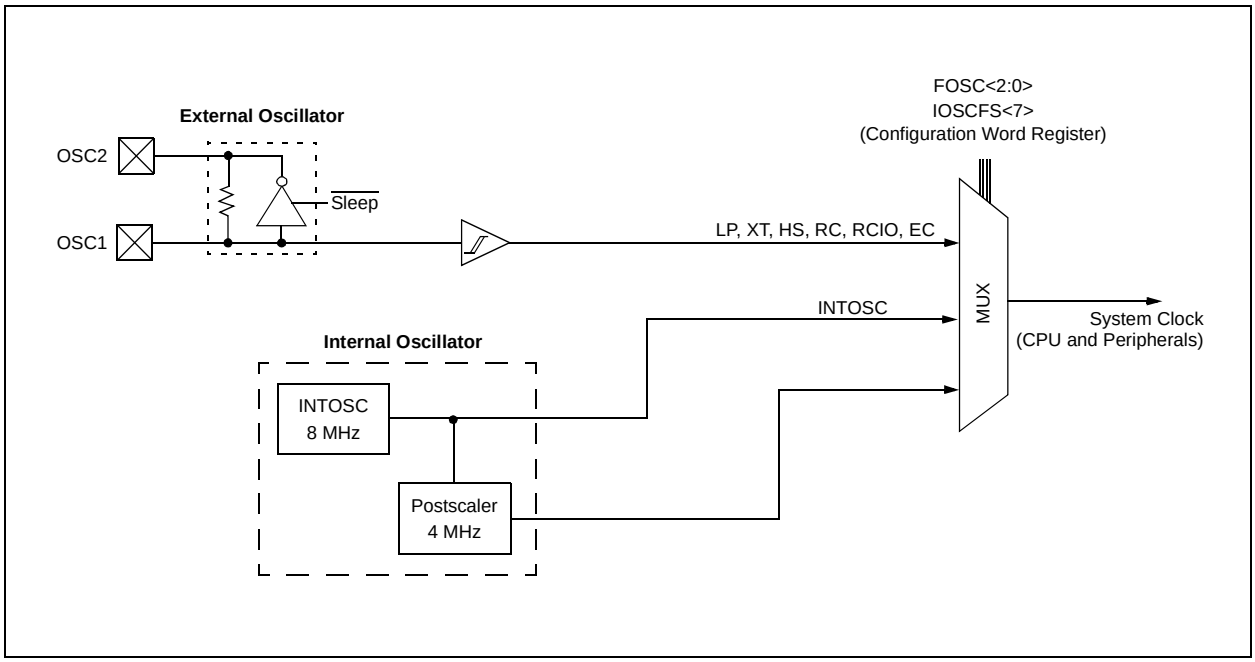

4.2 Clock Source Modes

Clock Source modes can be classified as external or internal.

- External Clock modes rely on external circuitry for the clock source. Examples are: Oscillator modules (EC mode), quartz crystal resonators or ceramic resonators (LP, XT and HS modes) and Resistor-Capacitor (RC) mode circuits.
- Internal clock sources are contained internally within the Oscillator module. The Oscillator module has two selectable clock frequencies: 4 MHz and 8 MHz

The system clock can be selected between external or internal clock sources via the FOSC<2:0> bits of the Configuration Word register.

4.3 External Clock Modes

4.3.1 OSCILLATOR START-UP TIMER (OST)

If the Oscillator module is configured for LP, XT or HS modes, the Oscillator Start-up Timer (OST) counts 1024 oscillations from OSC1. This occurs following a Power-on Reset (POR) and when the Power-up Timer (PWRT) has expired (if configured), or a wake-up from Sleep. During this time, the program counter does not increment and program execution is suspended. The OST ensures that the oscillator circuit, using a quartz crystal resonator or ceramic resonator, has started and is providing a stable system clock to the Oscillator module. When switching between clock sources, a delay is required to allow the new clock to stabilize. These oscillator delays are shown in Table 4-1.

TABLE 4-1: OSCILLATOR DELAY EXAMPLES

Switch From	Switch To	Frequency	Oscillator Delay
Sleep/POR	INTOSC	125 kHz to 8 MHz	Oscillator Warm-Up Delay (TWARM)
Sleep/POR	EC, RC	DC – 20 MHz	2 instruction cycles
Sleep/POR	LP, XT, HS	32 kHz to 20 MHz	1024 Clock Cycles (OST)

4.3.2 EC MODE

The External Clock (EC) mode allows an externally generated logic level as the system clock source. When operating in this mode, an external clock source is connected to the OSC1 input and the OSC2 is available for general purpose I/O. Figure 4-2 shows the pin connections for EC mode.

The Oscillator Start-up Timer (OST) is disabled when EC mode is selected. Therefore, there is no delay in operation after a Power-on Reset (POR) or wake-up from Sleep. Because the PIC® MCU design is fully static, stopping the external clock input will have the effect of halting the device while leaving all data intact. Upon restarting the external clock, the device will resume operation as if no time had elapsed.

FIGURE 4-2: EXTERNAL CLOCK (EC) MODE OPERATION

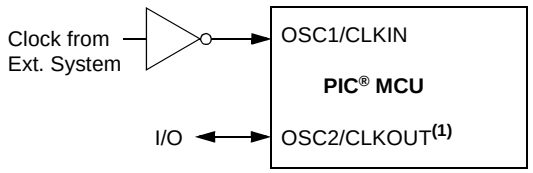

Note 1: Alternate pin functions are listed in the **Section 1.0 "Device Overview"**.

© 2010 Microchip Technology Inc.

4.3.3 LP, XT, HS MODES

The LP, XT and HS modes support the use of quartz crystal resonators or ceramic resonators connected to OSC1 and OSC2 (Figure 4-3). The mode selects a low, medium or high gain setting of the internal inverter-amplifier to support various resonator types and speed.

LP Oscillator mode selects the lowest gain setting of the internal inverter-amplifier. LP mode current consumption is the least of the three modes. This mode is designed to drive only 32.768 kHz tuning-fork type crystals (watch crystals).

XT Oscillator mode selects the intermediate gain setting of the internal inverter-amplifier. XT mode current consumption is the medium of the three modes. This mode is best suited to drive resonators with a medium drive level specification.

HS Oscillator mode selects the highest gain setting of the internal inverter-amplifier. HS mode current consumption is the highest of the three modes. This mode is best suited for resonators that require a high drive setting.

Figure 4-3 and Figure 4-4 show typical circuits for quartz crystal and ceramic resonators, respectively.

FIGURE 4-3: QUARTZ CRYSTAL OPERATION (LP, XT OR HS MODE)

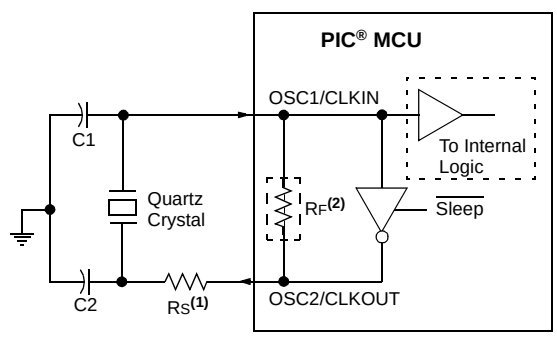

Note 1: A series resistor (R_S) may be required for quartz crystals with low drive level.

2: The value of R_F varies with the Oscillator mode selected (typically between 2 MΩ to 10 MΩ).

Note 1: Quartz crystal characteristics vary according to type, package and manufacturer. The user should consult the manufacturer data sheets for specifications and recommended application.

2: Always verify oscillator performance over the V_{DD} and temperature range that is expected for the application.

3: For oscillator design assistance, reference the following Microchip Applications Notes:

- AN826, "*Crystal Oscillator Basics and Crystal Selection for rfPIC® and PIC® Devices*" (DS00826)
- AN849, "*Basic PIC® Oscillator Design*" (DS00849)
- AN943, "*Practical PIC® Oscillator Analysis and Design*" (DS00943)
- AN949, "*Making Your Oscillator Work*" (DS00949)

FIGURE 4-4: CERAMIC RESONATOR OPERATION (XT OR HS MODE)

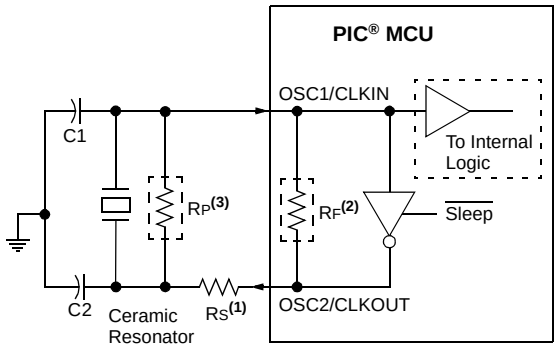

Note 1: A series resistor (R_S) may be required for ceramic resonators with low drive level.

2: The value of R_F varies with the Oscillator mode selected (typically between 2 MΩ to 10 MΩ).

3: An additional parallel feedback resistor (R_P) may be required for proper ceramic resonator operation.

4.3.4 EXTERNAL RC MODES

The external Resistor-Capacitor (RC) modes support the use of an external RC circuit. This allows the designer maximum flexibility in frequency choice while keeping costs to a minimum when clock accuracy is not required. There are two modes: RC and RCIO.

In RC mode, the RC circuit connects to OSC1. OSC2/CLKOUT outputs the RC oscillator frequency divided by 4. This signal may be used to provide a clock for external circuitry, synchronization, calibration, test or other application requirements. Figure 4-5 shows the external RC mode connections.

FIGURE 4-5: EXTERNAL RC MODES

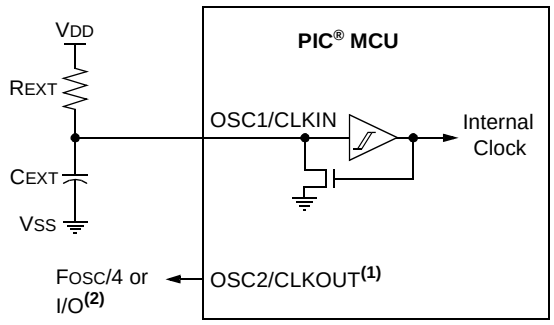

Recommended values: 10 kΩ ≤ REXT ≤ 100 kΩ, <3V
3 kΩ ≤ REXT ≤ 100 kΩ, 3-5V
CEXT > 20 pF, 2-5V

Note 1: Alternate pin functions are listed in **Section 1.0 "Device Overview"**.

2: Output depends upon RC or RCIO Clock mode.

In RCIO mode, the RC circuit is connected to OSC1. OSC2 becomes an additional general purpose I/O pin.

The RC oscillator frequency is a function of the supply voltage, the resistor (REXT) and capacitor (CEXT) values and the operating temperature. Other factors affecting the oscillator frequency are:

- threshold voltage variation
- component tolerances
- packaging variations in capacitance

The user also needs to take into account variation due to tolerance of external RC components used.

4.4 Internal Clock Modes

The Oscillator module provides a selectable system clock source of either 4 MHz or 8 MHz. The selectable frequency is configured through the IOSCFS bit of the Configuration Word.

The frequency of the internal oscillator can be trimmed with a calibration value in the OSCTUNE register.

4.4.1 INTOSC AND INTOSCIO MODES

The INTOSC and INTOSCIO modes configure the internal oscillators as the system clock source when the device is programmed using the oscillator selection or the FOSC<2:0> bits in the Configuration Word register (CONFIG). See **Section 12.0 "Special Features of the CPU"** for more information.

In **INTOSC** mode, OSC1/CLKIN is available for general purpose I/O. OSC2/CLKOUT outputs the selected internal oscillator frequency divided by 4. The CLKOUT signal may be used to provide a clock for external circuitry, synchronization, calibration, test or other application requirements.

In **INTOSCIO** mode, OSC1/CLKIN and OSC2/CLKOUT are available for general purpose I/O.

© 2010 Microchip Technology Inc.

4.4.1.1 OSCTUNE Register

The oscillator is factory calibrated but can be adjusted in software by writing to the OSCTUNE register (Register 4-1).

The default value of the OSCTUNE register is '0'. The value is a 5-bit two's complement number.

When the OSCTUNE register is modified, the frequency will begin shifting to the new frequency. Code execution continues during this shift. There is no indication that the shift has occurred.

REGISTER 4-1: OSCTUNE: OSCILLATOR TUNING REGISTER

U-0	U-0	U-0	R/W-0	R/W-0	R/W-0	R/W-0	R/W-0
—	—	—	TUN4	TUN3	TUN2	TUN1	TUN0
bit 7							bit 0

Legend:			
R = Readable bit	W = Writable bit	U = Unimplemented bit, read as '0'	
-n = Value at POR	'1' = Bit is set	'0' = Bit is cleared	x = Bit is unknown

bit 7-5 **Unimplemented:** Read as '0'

bit 4-0 **TUN<4:0>:** Frequency Tuning bits
01111 = Maximum frequency
01110 =
•
•
•
00001 =
00000 = Oscillator module is running at the calibrated frequency.
11111 =
•
•
•
10000 = Minimum frequency

TABLE 4-2: SUMMARY OF REGISTERS ASSOCIATED WITH CLOCK SOURCES

Name	Bit 7	Bit 6	Bit 5	Bit 4	Bit 3	Bit 2	Bit 1	Bit 0	Value on POR, BOR	Value on all other Resets(1)
CONFIG(2)	IOSCFS	$\overline{CP}$	MCLRE	$\overline{PWRTE}$	WDTE	FOSC2	FOSC1	FOSC0	—	—
OSCTUNE	—	—	—	TUN4	TUN3	TUN2	TUN1	TUN0	---0 0000	---u uuuu

Legend: x = unknown, u = unchanged, – = unimplemented locations read as '0'. Shaded cells are not used by oscillators.
Note 1: Other (non Power-up) Resets include $\overline{MCLR}$ Reset and Watchdog Timer Reset during normal operation.
2: See Configuration Word register (Register 12-1) for operation of all register bits.

NOTES:

© 2010 Microchip Technology Inc.

5.0 I/O PORT

There are as many as six general purpose I/O pins available. Depending on which peripherals are enabled, some or all of the pins may not be available as general purpose I/O. In general, when a peripheral is enabled, the associated pin may not be used as a general purpose I/O pin.

5.1 GPIO and the TRISIO Registers

GPIO is a 6-bit wide port with 5 bidirectional and 1 input-only pin. The corresponding data direction register is TRISIO (Register 5-2). Setting a TRISIO bit (= 1) will make the corresponding GPIO pin an input (i.e., disable the output driver). Clearing a TRISIO bit (= 0) will make the corresponding GPIO pin an output (i.e., enables output driver and puts the contents of the output latch on the selected pin). The exception is GP3, which is input only and its TRIS bit will always read as '1'. Example 5-1 shows how to initialize GPIO.

Note:	GPIO = PORTA TRISIO = TRISA

Reading the GPIO register (Register 5-1) reads the status of the pins, whereas writing to it will write to the PORT latch. All write operations are read-modify-write operations. Therefore, a write to a port implies that the port pins are read, this value is modified and then written to the PORT data latch. GP3 reads '0' when MCLRE = 1.

The TRISIO register controls the direction of the GPIO pins, even when they are being used as analog inputs. The user must ensure the bits in the TRISIO register are maintained set when using them as analog inputs. I/O pins configured as analog input always read '0'.

Note:	The ANSEL register must be initialized to configure an analog channel as a digital input. Pins configured as analog inputs will read '0' and cannot generate an interrupt.

EXAMPLE 5-1: INITIALIZING GPIO

```
BANKSEL  GPIO     ;
CLRF     GPIO     ;Init GPIO
BANKSEL  ANSEL    ;
CLRF     ANSEL    ;digital I/O, ADC clock
                  ;setting 'don't care'
MOVLW    0Ch      ;Set GP<3:2> as inputs
MOVWF    TRISIO    ;and set GP<5:4,1:0>
                   ;as outputs
```

REGISTER 5-1: GPIO: GPIO REGISTER

U-0	U-0	R/W-x	R/W-x	R-x	R/W-x	R/W-x	R/W-x
—	—	GP5	GP4	GP3	GP2	GP1	GP0
bit 7							bit 0

Legend:			
R = Readable bit	W = Writable bit	U = Unimplemented bit, read as '0'	
-n = Value at POR	'1' = Bit is set	'0' = Bit is cleared	x = Bit is unknown

bit 7-6 **Unimplemented**: Read as '0'

bit 5-0 **GP<5:0>**: GPIO I/O Pin bit
1 = GPIO pin is > V_{IH}
0 = GPIO pin is < V_{IL}

REGISTER 5-2: TRISIO: GPIO TRI-STATE REGISTER

U-0	U-0	R/W-1	R/W-1	R-1	R/W-1	R/W-1	R/W-1
—	—	TRISIO5	TRISIO4	TRISIO3	TRISIO2	TRISIO1	TRISIO0
bit 7							bit 0

Legend:			
R = Readable bit	W = Writable bit	U = Unimplemented bit, read as ‘0’	
-n = Value at POR	‘1’ = Bit is set	‘0’ = Bit is cleared	x = Bit is unknown

bit 7-6 **Unimplemented**: Read as ‘0’

bit 5-0 **TRISIO<5:0>:** GPIO Tri-State Control bit
1 = GPIO pin configured as an input (tri-stated)
0 = GPIO pin configured as an output

Note 1: TRISIO<3> always reads ‘1’.
2: TRISIO<5:4> always reads ‘1’ in XT, HS and LP Oscillator modes.

5.2 Additional Pin Functions

Every GPIO pin on the PIC12F609/615/617/12HV609/615 has an interrupt-on-change option and a weak pull-up option. The next three sections describe these functions.

5.2.1 ANSEL REGISTER

The ANSEL register is used to configure the Input mode of an I/O pin to analog. Setting the appropriate ANSEL bit high will cause all digital reads on the pin to be read as ‘0’ and allow analog functions on the pin to operate correctly.

The state of the ANSEL bits has no affect on digital output functions. A pin with TRIS clear and ANSEL set will still operate as a digital output, but the Input mode will be analog. This can cause unexpected behavior when executing read-modify-write instructions on the affected port.

5.2.2 WEAK PULL-UPS

Each of the GPIO pins, except GP3, has an individually configurable internal weak pull-up. Control bits WPUx enable or disable each pull-up. Refer to Register 5-5. Each weak pull-up is automatically turned off when the port pin is configured as an output. The pull-ups are disabled on a Power-on Reset by the $\overline{\text{GPPU}}$ bit of the OPTION register). A weak pull-up is automatically enabled for GP3 when configured as $\overline{\text{MCLR}}$ and disabled when GP3 is an I/O. There is no software control of the $\overline{\text{MCLR}}$ pull-up.

5.2.3 INTERRUPT-ON-CHANGE

Each GPIO pin is individually configurable as an interrupt-on-change pin. Control bits IOCx enable or disable the interrupt function for each pin. Refer to Register 5-6. The interrupt-on-change is disabled on a Power-on Reset.

For enabled interrupt-on-change pins, the values are compared with the old value latched on the last read of GPIO. The ‘mismatch’ outputs of the last read are OR’d together to set the GPIO Change Interrupt Flag bit (GPIF) in the INTCON register (Register 2-3).

This interrupt can wake the device from Sleep. The user, in the Interrupt Service Routine, clears the interrupt by:

a) Any read of GPIO AND Clear flag bit GPIF. This will end the mismatch condition;

OR

b) Any write of GPIO AND Clear flag bit GPIF will end the mismatch condition;

A mismatch condition will continue to set flag bit GPIF. Reading GPIO will end the mismatch condition and allow flag bit GPIF to be cleared. The latch holding the last read value is not affected by a $\overline{\text{MCLR}}$ nor BOR Reset. After these resets, the GPIF flag will continue to be set if a mismatch is present.

Note: If a change on the I/O pin should occur when any GPIO operation is being executed, then the GPIF interrupt flag may not get set.

© 2010 Microchip Technology Inc.

REGISTER 5-3: ANSEL: ANALOG SELECT REGISTER (PIC12F609/HV609)

U-0	U-0	U-0	U-0	R/W-1	U-0	R/W-1	R/W-1
—	—	—	—	ANS3	—	ANS1	ANS0
bit 7							bit 0

Legend:			
R = Readable bit	W = Writable bit	U = Unimplemented bit, read as ‘0’	
-n = Value at POR	‘1’ = Bit is set	‘0’ = Bit is cleared	x = Bit is unknown

bit 7-4 **Unimplemented**: Read as ‘0’

bit 3 **ANS3**: Analog Select Between Analog or Digital Function on Pin GP4
1 = Analog input. Pin is assigned as analog input[(1)].
0 = Digital I/O. Pin is assigned to port or special function.

bit 2 **Unimplemented**: Read as ‘0’

bit 1 **ANS1:** Analog Select Between Analog or Digital Function on Pin GP1
1 = Analog input. Pin is assigned as analog input.[(1)]
0 = Digital I/O. Pin is assigned to port or special function.

bit 0 **ANS0:** Analog Select Between Analog or Digital Function on Pin GP0
0 = Digital I/O. Pin is assigned to port or special function.
1 = Analog input. Pin is assigned as analog input.[(1)]

Note 1: Setting a pin to an analog input automatically disables the digital input circuitry, weak pull-ups, and interrupt-on-change if available. The corresponding TRIS bit must be set to Input mode in order to allow external control of the voltage on the pin.

REGISTER 5-4: ANSEL: ANALOG SELECT REGISTER (PIC12F615/617/HV615)

U-0	R/W-1	R/W-1	R/W-1	R/W-1	R/W-1	R/W-1	R/W-1
—	ADCS2	ADCS1	ADCS0	ANS3	ANS2	ANS1	ANS0
bit 7							bit 0

Legend:			
R = Readable bit	W = Writable bit	U = Unimplemented bit, read as ‘0’	
-n = Value at POR	‘1’ = Bit is set	‘0’ = Bit is cleared	x = Bit is unknown

bit 7 **Unimplemented**: Read as ‘0’

bit 6-4 **ADCS<2:0>:** A/D Conversion Clock Select bits
000 = FOSC/2
001 = FOSC/8
010 = FOSC/32
x11 = FRC (clock derived from a dedicated internal oscillator = 500 kHz max)
100 = FOSC/4
101 = FOSC/16
110 = FOSC/64

bit 3-0 **ANS<3:0>**: Analog Select Between Analog or Digital Function on Pins GP4, GP2, GP1, GP0, respectively.
1 = Analog input. Pin is assigned as analog input[(1)].
0 = Digital I/O. Pin is assigned to port or special function.

Note 1: Setting a pin to an analog input automatically disables the digital input circuitry, weak pull-ups, and interrupt-on-change if available. The corresponding TRIS bit must be set to Input mode in order to allow external control of the voltage on the pin.

REGISTER 5-5: WPU: WEAK PULL-UP GPIO REGISTER

U-0	U-0	R/W-1	R/W-1	U-0	R/W-1	R/W-1	R/W-1
—	—	WPU5	WPU4	—	WPU2	WPU1	WPU0
bit 7							bit 0

Legend:			
R = Readable bit	W = Writable bit	U = Unimplemented bit, read as ‘0’	
-n = Value at POR	‘1’ = Bit is set	‘0’ = Bit is cleared	x = Bit is unknown

bit 7-6 **Unimplemented**: Read as ‘0’

bit 5-4 **WPU<5:4>:** Weak Pull-up Control bits
1 = Pull-up enabled
0 = Pull-up disabled

bit 3 **WPU<3>:** Weak Pull-up Register bit(3)

bit 2-0 **WPU<2:0>:** Weak Pull-up Control bits
1 = Pull-up enabled
0 = Pull-up disabled

Note 1: Global $\overline{\text{GPPU}}$ must be enabled for individual pull-ups to be enabled.
2: The weak pull-up device is automatically disabled if the pin is in Output mode (TRISIO = 0).
3: The GP3 pull-up is enabled when configured as $\overline{\text{MCLR}}$ in the Configuration Word, otherwise it is disabled as an input and reads as ‘0’.
4: WPU<5:4> always reads ‘1’ in XT, HS and LP Oscillator modes.

REGISTER 5-6: IOC: INTERRUPT-ON-CHANGE GPIO REGISTER

U-0	U-0	R/W-0	R/W-0	R/W-0	R/W-0	R/W-0	R/W-0
—	—	IOC5	IOC4	IOC3	IOC2	IOC1	IOC0
bit 7							bit 0

Legend:			
R = Readable bit	W = Writable bit	U = Unimplemented bit, read as ‘0’	
-n = Value at POR	‘1’ = Bit is set	‘0’ = Bit is cleared	x = Bit is unknown

bit 7-6 **Unimplemented**: Read as ‘0’

bit 5-0 **IOC<5:0>:** Interrupt-on-change GPIO Control bit
1 = Interrupt-on-change enabled
0 = Interrupt-on-change disabled

Note 1: Global Interrupt Enable (GIE) must be enabled for individual interrupts to be recognized.
2: IOC<5:4> always reads ‘1’ in XT, HS and LP Oscillator modes.

© 2010 Microchip Technology Inc.

5.2.4 PIN DESCRIPTIONS AND DIAGRAMS

Each GPIO pin is multiplexed with other functions. The pins and their combined functions are briefly described here. For specific information about individual functions such as the Comparator or the ADC, refer to the appropriate section in this data sheet.

5.2.4.1 GP0/AN0(1)/CIN+/P1B(1)/ICSPDAT

Figure 5-1 shows the diagram for this pin. The GP0 pin is configurable to function as one of the following:

- a general purpose I/O
- an analog input for the ADC(1)
- an analog non-inverting input to the comparator
- a PWM output(1)
- In-Circuit Serial Programming data

5.2.4.2 GP1/AN1(1)/CIN0-/VREF(1)/ICSPCLK

Figure 5-1 shows the diagram for this pin. The GP1 pin is configurable to function as one of the following:

- a general purpose I/O
- an analog input for the ADC(1)
- an analog inverting input to the comparator
- a voltage reference input for the ADC(1)
- In-Circuit Serial Programming clock

Note 1: PIC12F615/617/HV615 only.

FIGURE 5-1: BLOCK DIAGRAM OF GP<1:0>

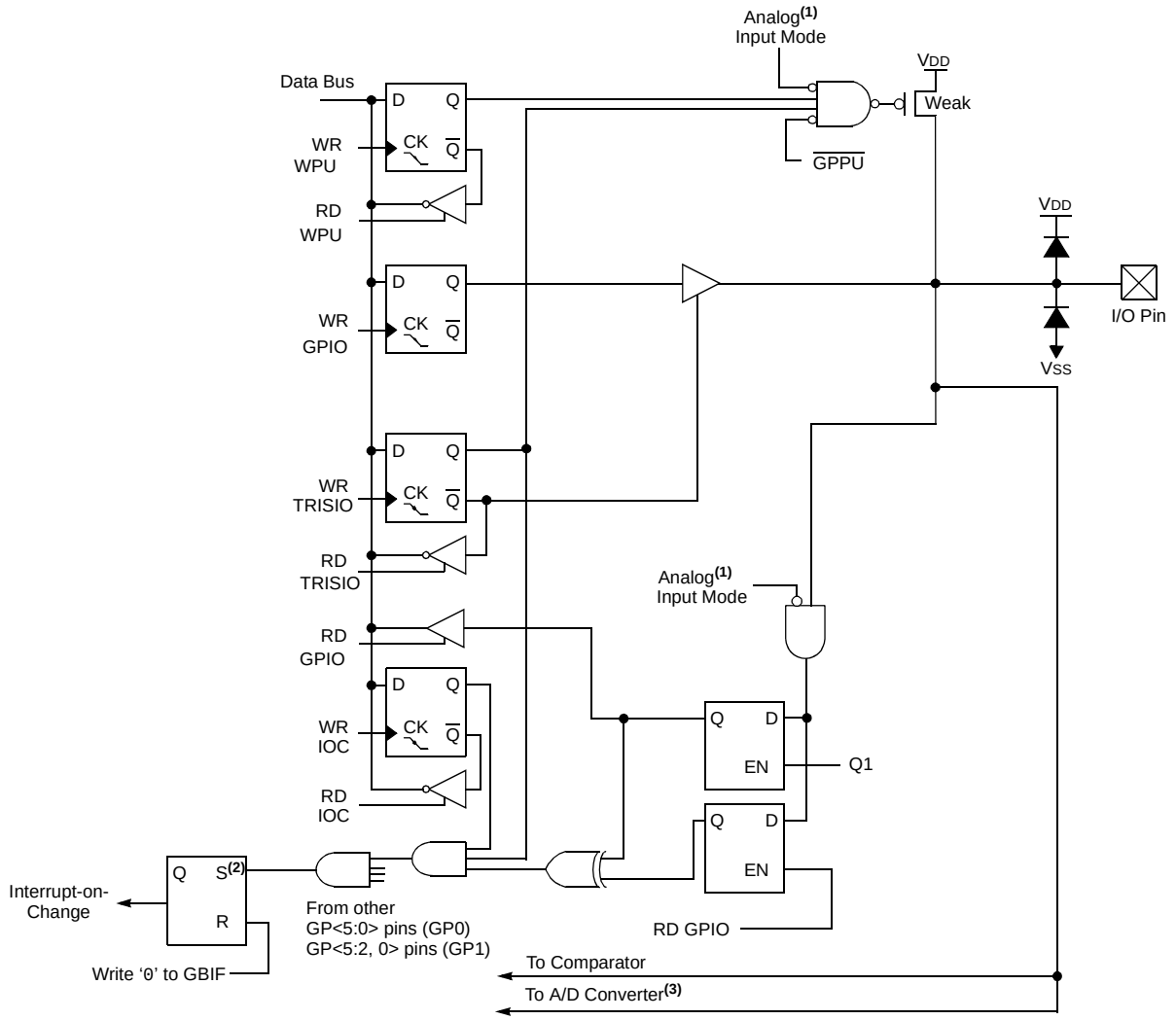

Note 1: Comparator mode and ANSEL determines Analog Input mode.
2: Set has priority over Reset.
3: PIC12F615/617/HV615 only.

5.2.4.3 GP2/AN2[(1)]/T0CKI/INT/COUT/CCP1[(1)]/P1A[(1)]

Note 1: PIC12F615/617/HV615 only.

Figure 5-2 shows the diagram for this pin. The GP2 pin is configurable to function as one of the following:

- a general purpose I/O
- an analog input for the ADC[(1)]
- the clock input for TMR0
- an external edge triggered interrupt
- a digital output from Comparator
- a Capture input/Compare input/PWM output[(1)]
- a PWM output[(1)]

FIGURE 5-2: BLOCK DIAGRAM OF GP2

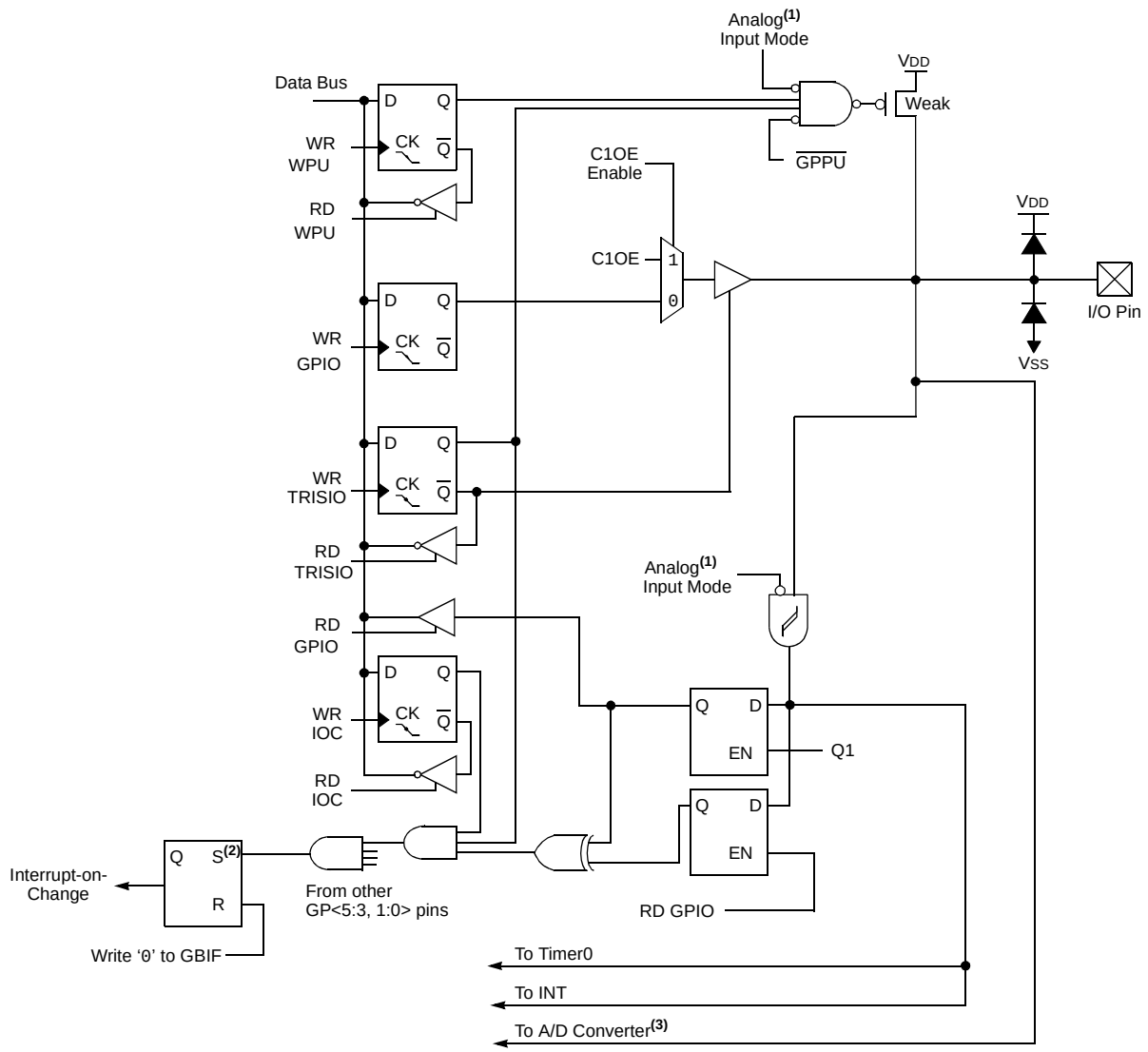

Note 1: Comparator mode and ANSEL determines Analog Input mode.
2: Set has priority over Reset.
3: PIC12F615/617/HV615 only.

© 2010 Microchip Technology Inc.

5.2.4.4 GP3/$\overline{\text{T1G}}$[1, 2]/$\overline{\text{MCLR}}$/VPP

Figure 5-3 shows the diagram for this pin. The GP3 pin is configurable to function as one of the following:

- a general purpose input
- a Timer1 gate (count enable), alternate pin[1, 2]
- as Master Clear Reset with weak pull-up

Note 1:	Alternate pin function.
2:	PIC12F615/617/HV615 only.

FIGURE 5-3: BLOCK DIAGRAM OF GP3

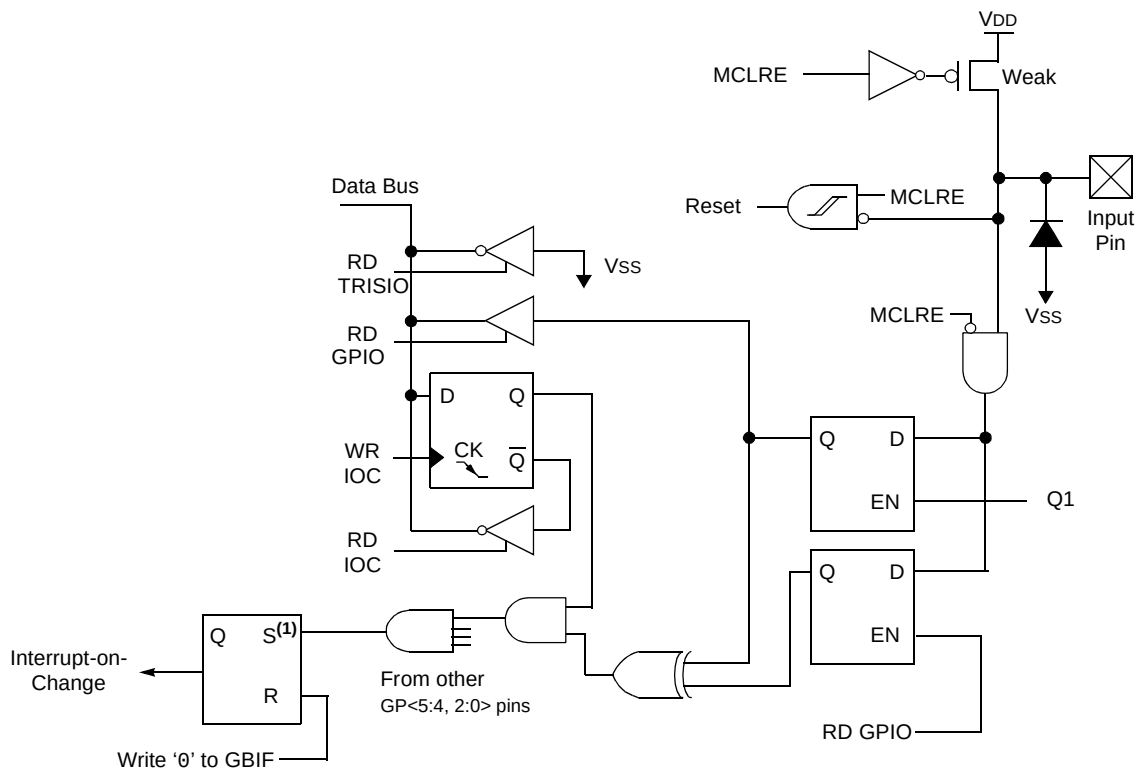

Note 1: Set has priority over Reset

5.2.4.5 GP4/AN3[2]/CIN1-/$\overline{\text{T1G}}$/P1B[1, 2]/OSC2/CLKOUT

Figure 5-4 shows the diagram for this pin. The GP4 pin is configurable to function as one of the following:

- a general purpose I/O
- an analog input for the ADC[2]
- Comparator inverting input
- a Timer1 gate (count enable)
- PWM output, alternate pin[1, 2]
- a crystal/resonator connection
- a clock output

Note 1: Alternate pin function.
2: PIC12F615/617/HV615 only.

FIGURE 5-4: BLOCK DIAGRAM OF GP4

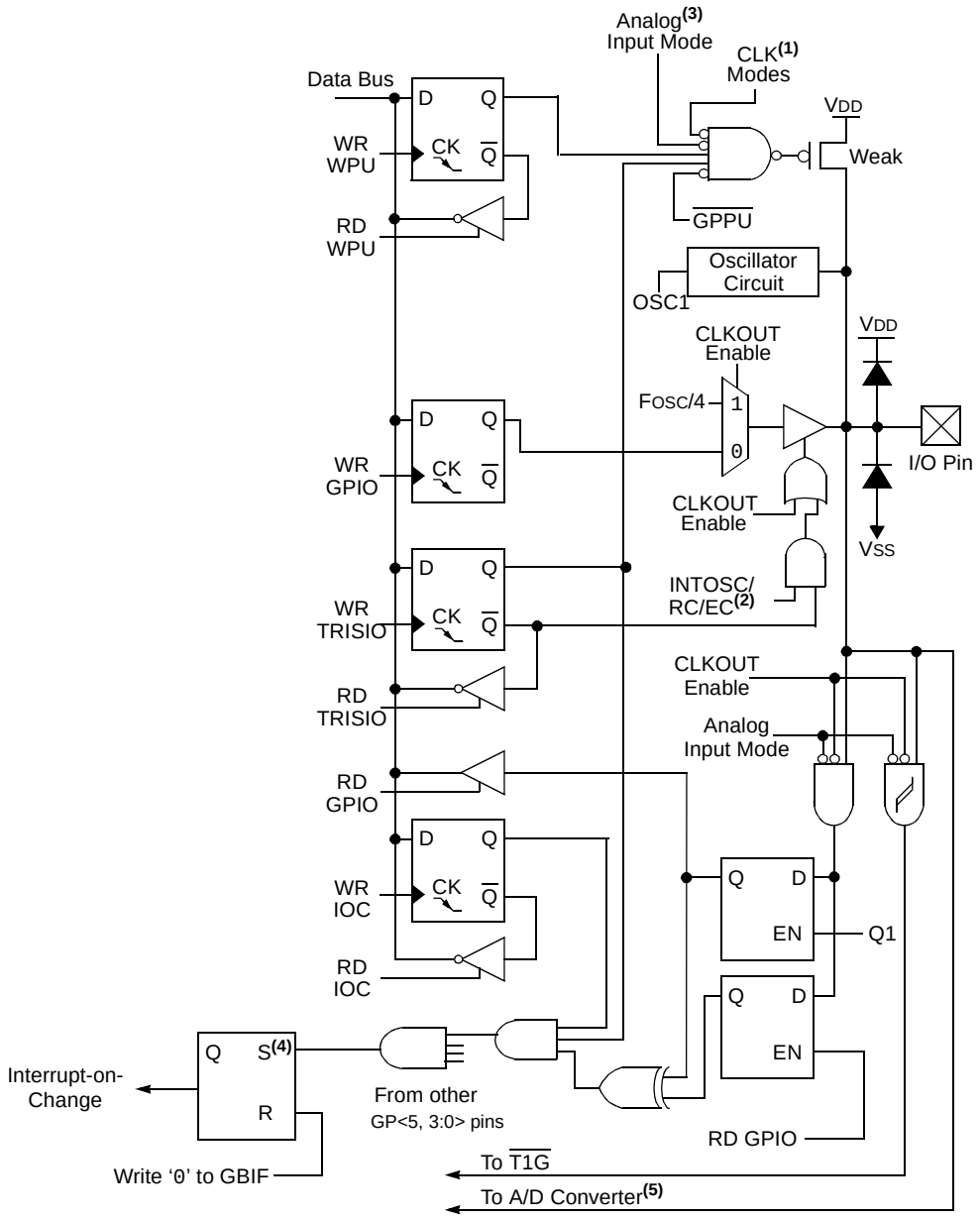

Note 1: CLK modes are XT, HS, LP, TMR1 LP and CLKOUT Enable.
2: With CLKOUT option.
3: Analog Input mode comes from ANSEL.
4: Set has priority over Reset.
5: PIC12F615/617/HV615 only.

© 2010 Microchip Technology Inc.

5.2.4.6 GP5/T1CKI/P1A[1, 2]/OSC1/CLKIN

Figure 5-5 shows the diagram for this pin. The GP5 pin is configurable to function as one of the following:

- a general purpose I/O
- a Timer1 clock input
- PWM output, alternate pin[1, 2]
- a crystal/resonator connection
- a clock input

Note 1: Alternate pin function.
2: PIC12F615/617/HV615 only.

FIGURE 5-5: BLOCK DIAGRAM OF GP5

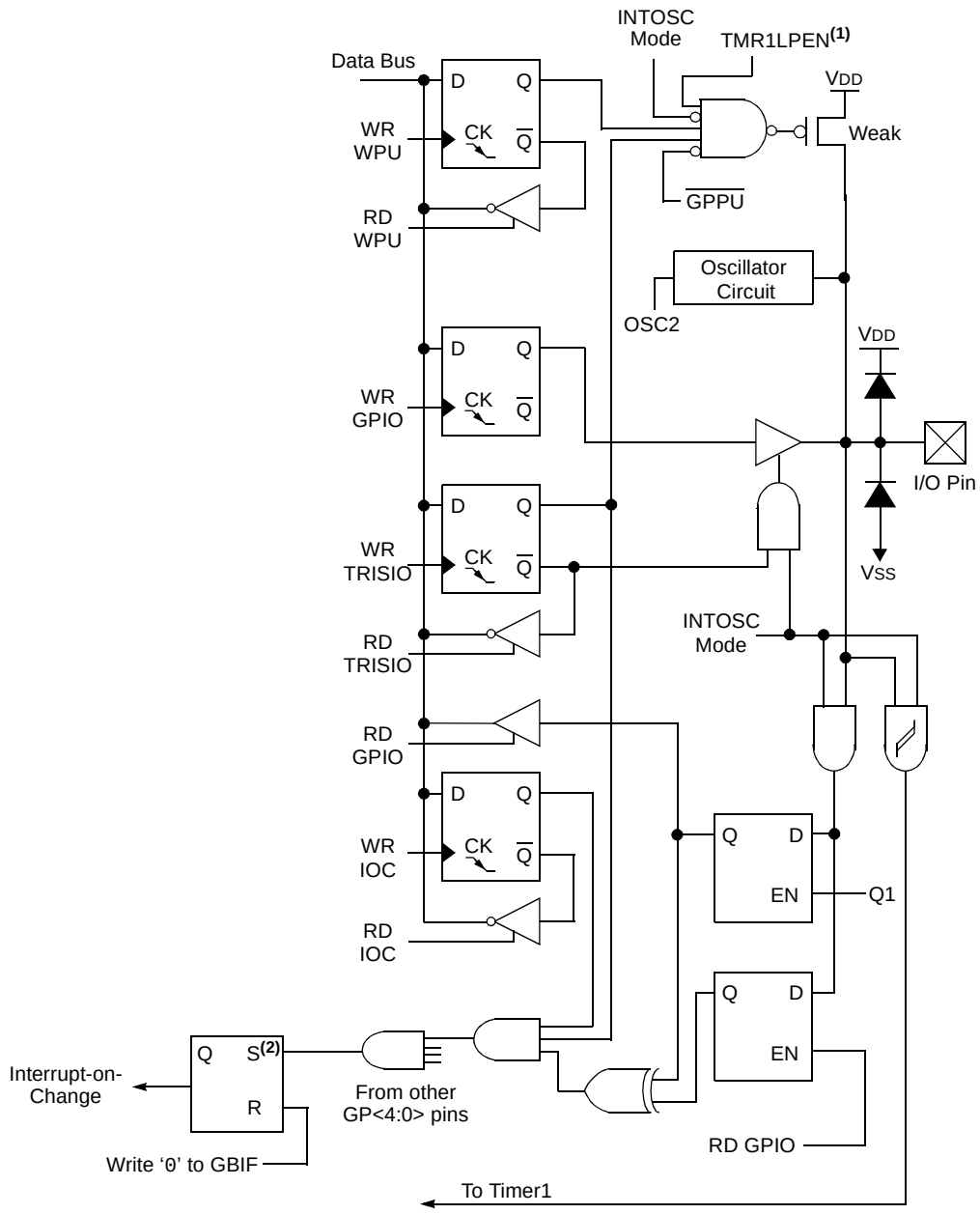

Note 1: Timer1 LP Oscillator enabled.
2: Set has priority over Reset.

TABLE 5-1: SUMMARY OF REGISTERS ASSOCIATED WITH GPIO

Name	Bit 7	Bit 6	Bit 5	Bit 4	Bit 3	Bit 2	Bit 1	Bit 0	Value on POR, BOR	Value on all other Resets
ANSEL	—	ADCS2(1)	ADCS1(1)	ADCS0(1)	ANS3	ANS2(1)	ANS1	ANS0	-000 1111	-000 1111
CMCON0	CMON	COUT	CMOE	CMPOL	—	CMR	—	CMCH	0000 -0-0	0000 -0-0
INTCON	GIE	PEIE	T0IE	INTE	GPIE	T0IF	INTF	GPIF	0000 0000	0000 0000
IOC	—	—	IOC5	IOC4	IOC3	IOC2	IOC1	IOC0	--00 0000	--00 0000
OPTION_REG	$\overline{\text{GPPU}}$	INTEDG	T0CS	T0SE	PSA	PS2	PS1	PS0	1111 1111	1111 1111
GPIO	—	—	GP5	GP4	GP3	GP2	GP1	GP0	--xx xxxx	--u0 u000
TRISIO	—	—	TRISIO5	TRISIO4	TRISIO3	TRISIO2	TRISIO1	TRISIO0	--11 1111	--11 1111
WPU	—	—	WPU5	WPU4	WPU3	WPU2	WPU1	WPU0	--11 1111	--11 -111
T1CON	T1GINV	TMR1GE	TICKPS1	T1CKPS0	T1OSCEN	$\overline{\text{T1SYNC}}$	TMR1CS	TMR1ON	0000 0000	uuuu uuuu
CCP1CON(1)	P1M	—	DC1B1	DC1B0	CCP1M3	CCP1M2	CCP1M1	CCP1M0	0-00 0000	0-00 0000
APFCON(1)	—	—	—	T1GSEL	—	—	P1BSEL	P1ASEL	---0 --00	---0 --00

Legend: x = unknown, u = unchanged, – = unimplemented locations read as ‘0’. Shaded cells are not used by GPIO.
Note 1: PIC12F615/617/HV615 only.

© 2010 Microchip Technology Inc.

6.0 TIMER0 MODULE

The Timer0 module is an 8-bit timer/counter with the following features:

- 8-bit timer/counter register (TMR0)
- 8-bit prescaler (shared with Watchdog Timer)
- Programmable internal or external clock source
- Programmable external clock edge selection
- Interrupt on overflow

Figure 6-1 is a block diagram of the Timer0 module.

6.1 Timer0 Operation

When used as a timer, the Timer0 module can be used as either an 8-bit timer or an 8-bit counter.

6.1.1 8-BIT TIMER MODE

When used as a timer, the Timer0 module will increment every instruction cycle (without prescaler). Timer mode is selected by clearing the T0CS bit of the OPTION register to '0'.

When TMR0 is written, the increment is inhibited for two instruction cycles immediately following the write.

Note:	The value written to the TMR0 register can be adjusted, in order to account for the two instruction cycle delay when TMR0 is written.

6.1.2 8-BIT COUNTER MODE

When used as a counter, the Timer0 module will increment on every rising or falling edge of the T0CKI pin. The incrementing edge is determined by the T0SE bit of the OPTION register. Counter mode is selected by setting the T0CS bit of the OPTION register to '1'.

FIGURE 6-1: BLOCK DIAGRAM OF THE TIMER0/WDT PRESCALER

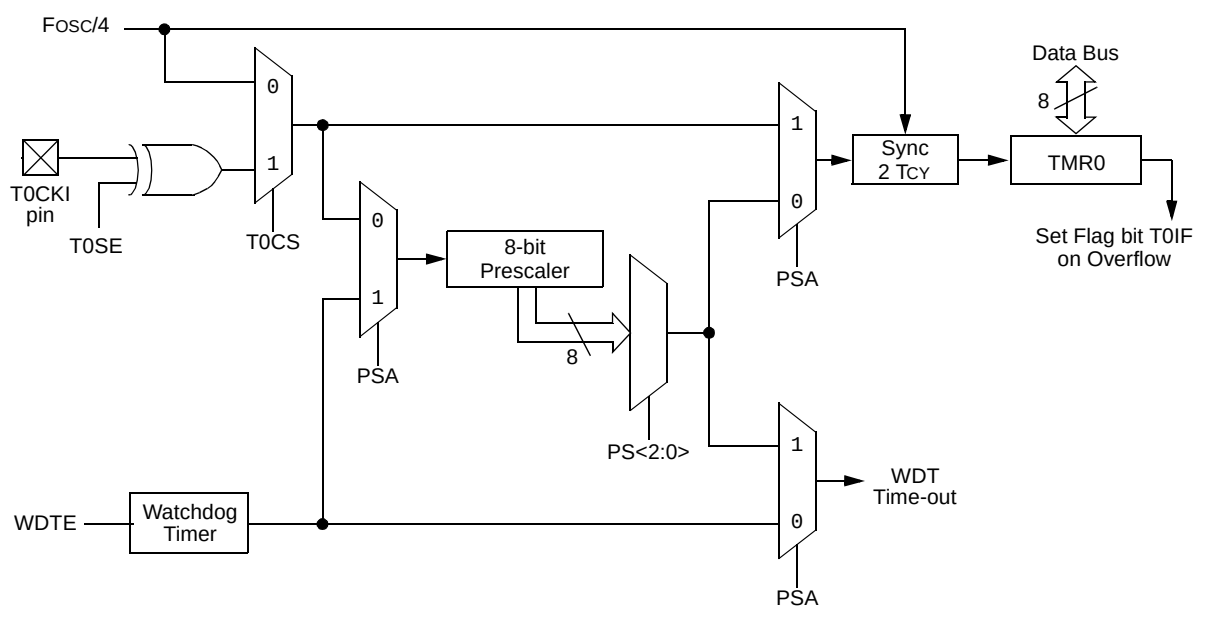

Note 1: T0SE, T0CS, PSA, PS<2:0> are bits in the OPTION register.

2: WDTE bit is in the Configuration Word register.

6.1.3 SOFTWARE PROGRAMMABLE PRESCALER

A single software programmable prescaler is available for use with either Timer0 or the Watchdog Timer (WDT), but not both simultaneously. The prescaler assignment is controlled by the PSA bit of the OPTION register. To assign the prescaler to Timer0, the PSA bit must be cleared to a '0'.

There are 8 prescaler options for the Timer0 module ranging from 1:2 to 1:256. The prescale values are selectable via the PS<2:0> bits of the OPTION register. In order to have a 1:1 prescaler value for the Timer0 module, the prescaler must be assigned to the WDT module.

The prescaler is not readable or writable. When assigned to the Timer0 module, all instructions writing to the TMR0 register will clear the prescaler.

When the prescaler is assigned to WDT, a `CLRWDT` instruction will clear the prescaler along with the WDT.

6.1.3.1 Switching Prescaler Between Timer0 and WDT Modules

As a result of having the prescaler assigned to either Timer0 or the WDT, it is possible to generate an unintended device Reset when switching prescaler values. When changing the prescaler assignment from Timer0 to the WDT module, the instruction sequence shown in Example 6-1, must be executed.

EXAMPLE 6-1: CHANGING PRESCALER (TIMER0 → WDT)

```
BANKSEL  TMR0            ;
CLRWDT                   ;Clear WDT
CLRF     TMR0            ;Clear TMR0 and
                         ;prescaler
BANKSEL  OPTION_REG      ;
BSF      OPTION_REG,PSA  ;Select WDT
CLRWDT                   ;
                         ;
MOVLW    b'11111000'     ;Mask prescaler
ANDWF    OPTION_REG,W    ;bits
IORLW    b'00000101'     ;Set WDT prescaler
MOVWF    OPTION_REG      ;to 1:32
```

When changing the prescaler assignment from the WDT to the Timer0 module, the following instruction sequence must be executed (see Example 6-2).

EXAMPLE 6-2: CHANGING PRESCALER (WDT → TIMER0)

```
CLRWDT                   ;Clear WDT and
                         ;prescaler
BANKSEL OPTION_REG       ;
MOVLW   b'11110000'      ;Mask TMR0 select and
ANDWF   OPTION_REG,W     ;prescaler bits
IORLW   b'00000011'      ;Set prescale to 1:16
MOVWF   OPTION_REG       ;
```

6.1.4 TIMER0 INTERRUPT

Timer0 will generate an interrupt when the TMR0 register overflows from FFh to 00h. The T0IF interrupt flag bit of the INTCON register is set every time the TMR0 register overflows, regardless of whether or not the Timer0 interrupt is enabled. The T0IF bit must be cleared in software. The Timer0 interrupt enable is the T0IE bit of the INTCON register.

Note:	The Timer0 interrupt cannot wake the processor from Sleep since the timer is frozen during Sleep.

6.1.5 USING TIMER0 WITH AN EXTERNAL CLOCK

When Timer0 is in Counter mode, the synchronization of the T0CKI input and the Timer0 register is accomplished by sampling the prescaler output on the Q2 and Q4 cycles of the internal phase clocks. Therefore, the high and low periods of the external clock source must meet the timing requirements as shown in **Section 16.0 "Electrical Specifications"**.

© 2010 Microchip Technology Inc.

REGISTER 6-1: OPTION_REG: OPTION REGISTER

R/W-1	R/W-1	R/W-1	R/W-1	R/W-1	R/W-1	R/W-1	R/W-1
$\overline{\text{GPPU}}$	INTEDG	T0CS	T0SE	PSA	PS2	PS1	PS0
bit 7							bit 0

Legend:			
R = Readable bit	W = Writable bit	U = Unimplemented bit, read as ‘0’	
-n = Value at POR	‘1’ = Bit is set	‘0’ = Bit is cleared	x = Bit is unknown

bit 7 **$\overline{\text{GPPU}}$:** GPIO Pull-up Enable bit
`1` = GPIO pull-ups are disabled
`0` = GPIO pull-ups are enabled by individual PORT latch values in WPU register

bit 6 **INTEDG:** Interrupt Edge Select bit
`1` = Interrupt on rising edge of INT pin
`0` = Interrupt on falling edge of INT pin

bit 5 **T0CS:** TMR0 Clock Source Select bit
`1` = Transition on T0CKI pin
`0` = Internal instruction cycle clock (FOSC/4)

bit 4 **T0SE:** TMR0 Source Edge Select bit
`1` = Increment on high-to-low transition on T0CKI pin
`0` = Increment on low-to-high transition on T0CKI pin

bit 3 **PSA:** Prescaler Assignment bit
`1` = Prescaler is assigned to the WDT
`0` = Prescaler is assigned to the Timer0 module

bit 2-0 **PS<2:0>:** Prescaler Rate Select bits

BIT VALUE	TMR0 RATE	WDT RATE
000	1 : 2	1 : 1
001	1 : 4	1 : 2
010	1 : 8	1 : 4
011	1 : 16	1 : 8
100	1 : 32	1 : 16
101	1 : 64	1 : 32
110	1 : 128	1 : 64
111	1 : 256	1 : 128

TABLE 6-1: SUMMARY OF REGISTERS ASSOCIATED WITH TIMER0

Name	Bit 7	Bit 6	Bit 5	Bit 4	Bit 3	Bit 2	Bit 1	Bit 0	Value on POR, BOR	Value on all other Resets
TMR0	Timer0 Module Register								xxxx xxxx	uuuu uuuu
INTCON	GIE	PEIE	T0IE	INTE	GPIE	T0IF	INTF	GPIF	0000 000x	0000 000x
OPTION_REG	$\overline{\text{GPPU}}$	INTEDG	T0CS	T0SE	PSA	PS2	PS1	PS0	1111 1111	1111 1111
TRISIO	—	—	TRISIO5	TRISIO4	TRISIO3	TRISIO2	TRISIO1	TRISIO0	--11 1111	--11 1111

Legend: – = Unimplemented locations, read as ‘0’, u = unchanged, x = unknown. Shaded cells are not used by the Timer0 module.

NOTES:

© 2010 Microchip Technology Inc.

7.0 TIMER1 MODULE WITH GATE CONTROL

The Timer1 module is a 16-bit timer/counter with the following features:

- 16-bit timer/counter register pair (TMR1H:TMR1L)
- Programmable internal or external clock source
- 3-bit prescaler
- Optional LP oscillator
- Synchronous or asynchronous operation
- Timer1 gate (count enable) via comparator or $\overline{\text{T1G}}$ pin
- Interrupt on overflow
- Wake-up on overflow (external clock, Asynchronous mode only)
- Time base for the Capture/Compare function
- Special Event Trigger (with ECCP)
- Comparator output synchronization to Timer1 clock

Figure 7-1 is a block diagram of the Timer1 module.

7.1 Timer1 Operation

The Timer1 module is a 16-bit incrementing counter which is accessed through the TMR1H:TMR1L register pair. Writes to TMR1H or TMR1L directly update the counter.

When used with an internal clock source, the module is a timer. When used with an external clock source, the module can be used as either a timer or counter.

7.2 Clock Source Selection

The TMR1CS bit of the T1CON register is used to select the clock source. When TMR1CS = 0, the clock source is FOSC/4. When TMR1CS = 1, the clock source is supplied externally.

Clock Source	TMR1CS	T1ACS
FOSC/4	0	0
FOSC	0	1
T1CKI pin	1	x

FIGURE 7-1: TIMER1 BLOCK DIAGRAM

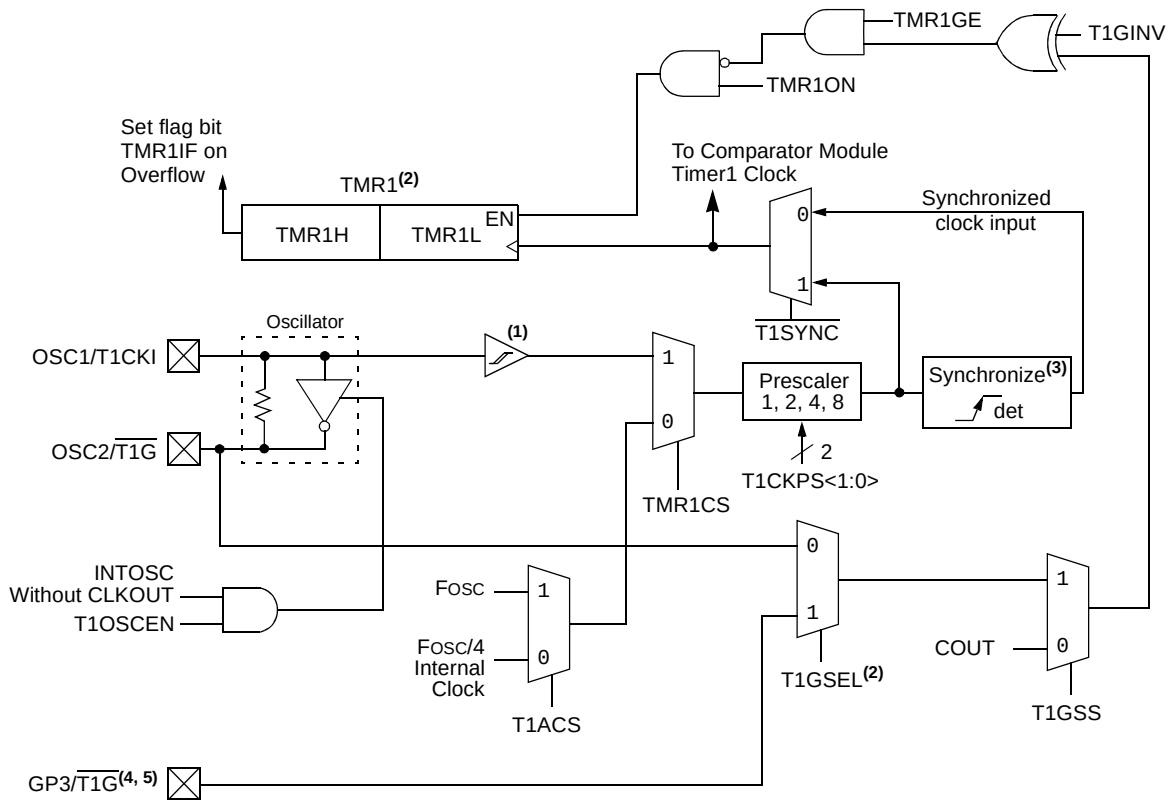

Note 1: ST Buffer is low power type when using LP oscillator, or high speed type when using T1CKI.
2: Timer1 register increments on rising edge.
3: Synchronize does not operate while in Sleep.
4: Alternate pin function.
5: PIC12F615/617/HV615 only.

© 2010 Microchip Technology Inc.

7.2.1 INTERNAL CLOCK SOURCE

When the internal clock source is selected, the TMR1H:TMR1L register pair will increment on multiples of T_{CY} as determined by the Timer1 prescaler.

7.2.2 EXTERNAL CLOCK SOURCE

When the external clock source is selected, the Timer1 module may work as a timer or a counter.

When counting, Timer1 is incremented on the rising edge of the external clock input T1CKI. In addition, the Counter mode clock can be synchronized to the microcontroller system clock or run asynchronously.

If an external clock oscillator is needed (and the microcontroller is using the INTOSC without CLKOUT), Timer1 can use the LP oscillator as a clock source.

In Counter mode, a falling edge must be registered by the counter prior to the first incrementing rising edge after one or more of the following conditions:

- Timer1 is enabled after POR or BOR Reset
- A write to TMR1H or TMR1L
- T1CKI is high when Timer1 is disabled and when Timer1 is re-enabled T1CKI is low. See Figure 7-2.

7.3 Timer1 Prescaler

Timer1 has four prescaler options allowing 1, 2, 4 or 8 divisions of the clock input. The T1CKPS bits of the T1CON register control the prescale counter. The prescale counter is not directly readable or writable; however, the prescaler counter is cleared upon a write to TMR1H or TMR1L.

7.4 Timer1 Oscillator

A low-power 32.768 kHz crystal oscillator is built-in between pins OSC1 (input) and OSC2 (output). The oscillator is enabled by setting the T1OSCEN control bit of the T1CON register. The oscillator will continue to run during Sleep.

The Timer1 oscillator is shared with the system LP oscillator. Thus, Timer1 can use this mode only when the primary system clock is derived from the internal oscillator or when in LP oscillator mode. The user must provide a software time delay to ensure proper oscillator start-up.

TRISIO5 and TRISIO4 bits are set when the Timer1 oscillator is enabled. GP5 and GP4 bits read as ‘0’ and TRISIO5 and TRISIO4 bits read as ‘1’.

Note:	The oscillator requires a start-up and stabilization time before use. Thus, T1OSCEN should be set and a suitable delay observed prior to enabling Timer1.

7.5 Timer1 Operation in Asynchronous Counter Mode

If control bit $\overline{\text{T1SYNC}}$ of the T1CON register is set, the external clock input is not synchronized. The timer continues to increment asynchronous to the internal phase clocks. The timer will continue to run during Sleep and can generate an interrupt on overflow, which will wake-up the processor. However, special precautions in software are needed to read/write the timer (see **Section 7.5.1 “Reading and Writing Timer1 in Asynchronous Counter Mode”**).

Note:	When switching from synchronous to asynchronous operation, it is possible to skip an increment. When switching from asynchronous to synchronous operation, it is possible to produce a single spurious increment.

Note:	In asynchronous counter mode or when using the internal oscillator and T1ACS=1, Timer1 can not be used as a time base for the capture or compare modes of the ECCP module (for PIC12F615/617/HV615 only).

7.5.1 READING AND WRITING TIMER1 IN ASYNCHRONOUS COUNTER MODE

Reading TMR1H or TMR1L while the timer is running from an external asynchronous clock will ensure a valid read (taken care of in hardware). However, the user should keep in mind that reading the 16-bit timer in two 8-bit values itself poses certain problems, since the timer may overflow between the reads.

For writes, it is recommended that the user simply stop the timer and write the desired values. A write contention may occur by writing to the timer registers, while the register is incrementing. This may produce an unpredictable value in the TMR1H:TTMR1L register pair.

7.6 Timer1 Gate

Timer1 gate source is software configurable to be the T1G pin (or the alternate T1G pin) or the output of the Comparator. This allows the device to directly time external events using T1G or analog events using the Comparator. See the CMCON1 Register (Register 9-2) for selecting the Timer1 gate source. This feature can simplify the software for a Delta-Sigma A/D converter and many other applications. For more information on Delta-Sigma A/D converters, see the Microchip web site (www.microchip.com).

Note:	TMR1GE bit of the T1CON register must be set to use either T1G or COUT as the Timer1 gate source. See Register 9-2 for more information on selecting the Timer1 gate source.

Timer1 gate can be inverted using the T1GINV bit of the T1CON register, whether it originates from the T1G pin or the Comparator output. This configures Timer1 to measure either the active-high or active-low time between events.

7.7 Timer1 Interrupt

The Timer1 register pair (TMR1H:TMR1L) increments to FFFFh and rolls over to 0000h. When Timer1 rolls over, the Timer1 interrupt flag bit of the PIR1 register is set. To enable the interrupt on rollover, you must set these bits:

- Timer1 interrupt enable bit of the PIE1 register
- PEIE bit of the INTCON register
- GIE bit of the INTCON register

The interrupt is cleared by clearing the TMR1IF bit in the Interrupt Service Routine.

Note:	The TMR1H:TTMR1L register pair and the TMR1IF bit should be cleared before enabling interrupts.

7.8 Timer1 Operation During Sleep

Timer1 can only operate during Sleep when setup in Asynchronous Counter mode. In this mode, an external crystal or clock source can be used to increment the counter. To set up the timer to wake the device:

- TMR1ON bit of the T1CON register must be set
- TMR1IE bit of the PIE1 register must be set
- PEIE bit of the INTCON register must be set

The device will wake-up on an overflow and execute the next instruction. If the GIE bit of the INTCON register is set, the device will call the Interrupt Service Routine (0004h).

7.9 ECCP Capture/Compare Time Base (PIC12F615/617/HV615 only)

The ECCP module uses the TMR1H:TMR1L register pair as the time base when operating in Capture or Compare mode.

In Capture mode, the value in the TMR1H:TMR1L register pair is copied into the CCPR1H:CCPR1L register pair on a configured event.

In Compare mode, an event is triggered when the value CCPR1H:CCPR1L register pair matches the value in the TMR1H:TMR1L register pair. This event can be a Special Event Trigger.

For more information, see **Section 11.0 “Enhanced Capture/Compare/PWM (With Auto-Shutdown and Dead Band) Module (PIC12F615/617/HV615 only)”**.

© 2010 Microchip Technology Inc.

7.10 ECCP Special Event Trigger (PIC12F615/617/HV615 only)

If a ECCP is configured to trigger a special event, the trigger will clear the TMR1H:TMR1L register pair. This special event does not cause a Timer1 interrupt. The ECCP module may still be configured to generate a ECCP interrupt.

In this mode of operation, the CCPR1H:CCPR1L register pair effectively becomes the period register for Timer1.

Timer1 should be synchronized to the FOSC to utilize the Special Event Trigger. Asynchronous operation of Timer1 can cause a Special Event Trigger to be missed.

In the event that a write to TMR1H or TMR1L coincides with a Special Event Trigger from the ECCP, the write will take precedence.

For more information, see **Section 11.0 "Enhanced Capture/Compare/PWM (With Auto-Shutdown and Dead Band) Module (PIC12F615/617/HV615 only)"**.

7.11 Comparator Synchronization

The same clock used to increment Timer1 can also be used to synchronize the comparator output. This feature is enabled in the Comparator module.

When using the comparator for Timer1 gate, the comparator output should be synchronized to Timer1. This ensures Timer1 does not miss an increment if the comparator changes.

For more information, see **Section 9.0 "Comparator Module"**.

FIGURE 7-2: TIMER1 INCREMENTING EDGE

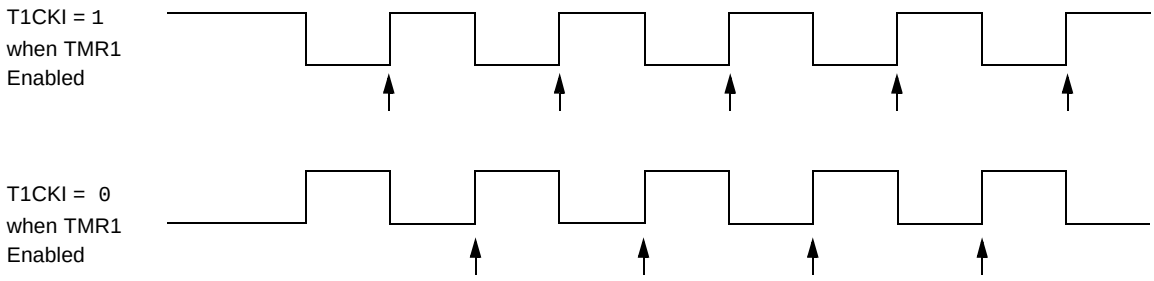

Note 1: Arrows indicate counter increments.

2: In Counter mode, a falling edge must be registered by the counter prior to the first incrementing rising edge of the clock.

7.12 Timer1 Control Register

The Timer1 Control register (T1CON), shown in Register 7-1, is used to control Timer1 and select the various features of the Timer1 module.

REGISTER 7-1: T1CON: TIMER 1 CONTROL REGISTER

R/W-0	R/W-0	R/W-0	R/W-0	R/W-0	R/W-0	R/W-0	R/W-0
T1GINV(1)	TMR1GE(2)	T1CKPS1	T1CKPS0	T1OSCEN	$\overline{\text{T1SYNC}}$	TMR1CS	TMR1ON
bit 7							bit 0

Legend:			
R = Readable bit	W = Writable bit	U = Unimplemented bit, read as ‘0’	
-n = Value at POR	‘1’ = Bit is set	‘0’ = Bit is cleared	x = Bit is unknown

bit 7 **T1GINV:** Timer1 Gate Invert bit(1)
1 = Timer1 gate is active-high (Timer1 counts when gate is high)
0 = Timer1 gate is active-low (Timer1 counts when gate is low)

bit 6 **TMR1GE:** Timer1 Gate Enable bit(2)
If TMR1ON = 0:
This bit is ignored
If TMR1ON = 1:
1 = Timer1 is on if Timer1 gate is active
0 = Timer1 is on

bit 5-4 **T1CKPS<1:0>:** Timer1 Input Clock Prescale Select bits
11 = 1:8 Prescale Value
10 = 1:4 Prescale Value
01 = 1:2 Prescale Value
00 = 1:1 Prescale Value

bit 3 **T1OSCEN:** LP Oscillator Enable Control bit
If INTOSC without CLKOUT oscillator is active:
1 = LP oscillator is enabled for Timer1 clock
0 = LP oscillator is off
For all other system clock modes:
This bit is ignored. LP oscillator is disabled.

bit 2 **$\overline{\text{T1SYNC}}$:** Timer1 External Clock Input Synchronization Control bit
TMR1CS = 1:
1 = Do not synchronize external clock input
0 = Synchronize external clock input
TMR1CS = 0:
This bit is ignored. Timer1 uses the internal clock

bit 1 **TMR1CS:** Timer1 Clock Source Select bit
1 = External clock from T1CKI pin (on the rising edge)
0 = Internal clock (FOSC/4) or system clock (FOSC)(3)

bit 0 **TMR1ON:** Timer1 On bit
1 = Enables Timer1
0 = Stops Timer1

Note 1: T1GINV bit inverts the Timer1 gate logic, regardless of source.
2: TMR1GE bit must be set to use either $\overline{\text{T1G}}$ pin or COUT, as selected by the T1GSS bit of the CMCON1 register, as a Timer1 gate source.
3: See T1ACS bit in CMCON1 register.

© 2010 Microchip Technology Inc.

TABLE 7-1: SUMMARY OF REGISTERS ASSOCIATED WITH TIMER1

Name	Bit 7	Bit 6	Bit 5	Bit 4	Bit 3	Bit 2	Bit 1	Bit 0	Value on POR, BOR	Value on all other Resets
APFCON(1)	—	—	—	T1GSEL	—	—	P1BSEL	P1ASEL	---0 --00	---0 --00
CMCON0	CMON	COUT	CMOE	CMPOL	—	CMR	—	CMCH	0000 -0-0	0000 -0-0
CMCON1	—	—	—	T1ACS	CMHYS	—	T1GSS	CMSYNC	---0 0-10	---0 0-10
INTCON	GIE	PEIE	T0IE	INTE	GPIE	T0IF	INTF	GPIF	0000 000x	0000 000x
PIE1	—	ADIE(1)	CCP1IE(1)	—	CMIE	—	TMR2IE(1)	TMR1IE	-00- 0-00	-00- 0-00
PIR1	—	ADIF(1)	CCP1IF(1)	—	CMIF	—	TMR2IF(1)	TMR1IF	-00- 0-00	-00- 0-00
TMR1H	Holding Register for the Most Significant Byte of the 16-bit TMR1 Register								xxxx xxxx	uuuu uuuu
TMR1L	Holding Register for the Least Significant Byte of the 16-bit TMR1 Register								xxxx xxxx	uuuu uuuu
T1CON	T1GINV	TMR1GE	T1CKPS1	T1CKPS0	T1OSCEN	$\overline{\text{T1SYNC}}$	TMR1CS	TMR1ON	0000 0000	uuuu uuuu

Legend: x = unknown, u = unchanged, - = unimplemented, read as '0'. Shaded cells are not used by the Timer1 module.

Note 1: PIC12F615/617/HV615 only.

NOTES:

© 2010 Microchip Technology Inc.

8.0 TIMER2 MODULE (PIC12F615/617/HV615 ONLY)

The Timer2 module is an 8-bit timer with the following features:

- 8-bit timer register (TMR2)
- 8-bit period register (PR2)
- Interrupt on TMR2 match with PR2
- Software programmable prescaler (1:1, 1:4, 1:16)
- Software programmable postscaler (1:1 to 1:16)

See Figure 8-1 for a block diagram of Timer2.

8.1 Timer2 Operation

The clock input to the Timer2 module is the system instruction clock (FOSC/4). The clock is fed into the Timer2 prescaler, which has prescale options of 1:1, 1:4 or 1:16. The output of the prescaler is then used to increment the TMR2 register.

The values of TMR2 and PR2 are constantly compared to determine when they match. TMR2 will increment from 00h until it matches the value in PR2. When a match occurs, two things happen:

- TMR2 is reset to 00h on the next increment cycle.
- The Timer2 postscaler is incremented

The match output of the Timer2/PR2 comparator is then fed into the Timer2 postscaler. The postscaler has postscale options of 1:1 to 1:16 inclusive. The output of the Timer2 postscaler is used to set the TMR2IF interrupt flag bit in the PIR1 register.

The TMR2 and PR2 registers are both fully readable and writable. On any Reset, the TMR2 register is set to 00h and the PR2 register is set to FFh.

Timer2 is turned on by setting the TMR2ON bit in the T2CON register to a ‘1’. Timer2 is turned off by clearing the TMR2ON bit to a ‘0’.

The Timer2 prescaler is controlled by the T2CKPS bits in the T2CON register. The Timer2 postscaler is controlled by the TOUTPS bits in the T2CON register. The prescaler and postscaler counters are cleared when:

- A write to TMR2 occurs.
- A write to T2CON occurs.
- Any device Reset occurs (Power-on Reset, $\overline{\text{MCLR}}$ Reset, Watchdog Timer Reset, or Brown-out Reset).

Note:	TMR2 is not cleared when T2CON is written.

FIGURE 8-1: TIMER2 BLOCK DIAGRAM

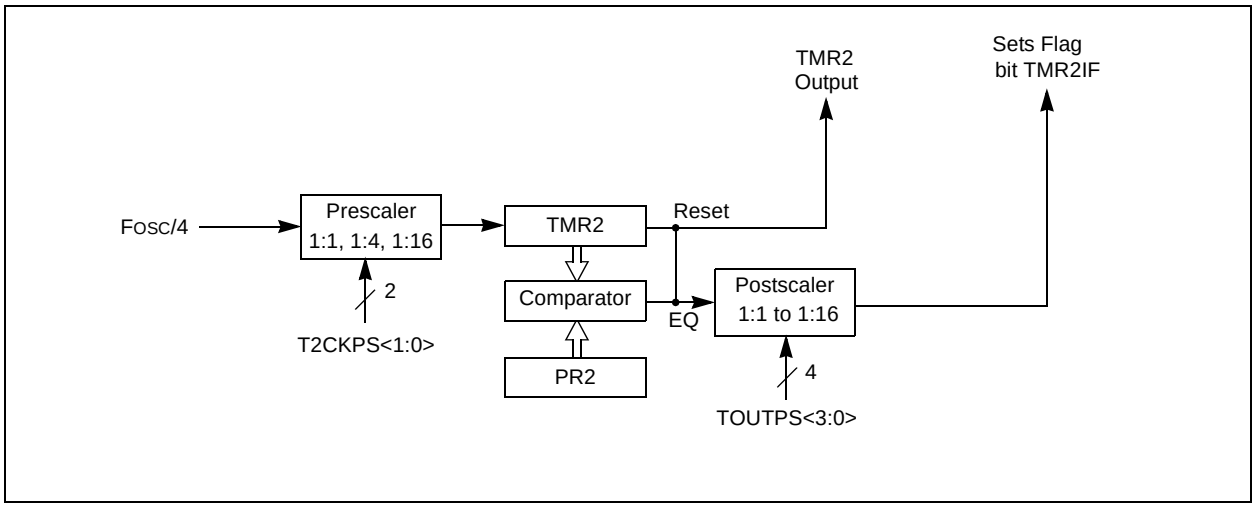

REGISTER 8-1: T2CON: TIMER 2 CONTROL REGISTER

U-0	R/W-0	R/W-0	R/W-0	R/W-0	R/W-0	R/W-0	R/W-0
—	TOUTPS3	TOUTPS2	TOUTPS1	TOUTPS0	TMR2ON	T2CKPS1	T2CKPS0
bit 7							bit 0

Legend:			
R = Readable bit	W = Writable bit	U = Unimplemented bit, read as ‘0’	
-n = Value at POR	‘1’ = Bit is set	‘0’ = Bit is cleared	x = Bit is unknown

bit 7 **Unimplemented:** Read as ‘0’

bit 6-3 **TOUTPS<3:0>:** Timer2 Output Postscaler Select bits
0000 =1:1 Postscaler
0001 =1:2 Postscaler
0010 =1:3 Postscaler
0011 =1:4 Postscaler
0100 =1:5 Postscaler
0101 =1:6 Postscaler
0110 =1:7 Postscaler
0111 =1:8 Postscaler
1000 =1:9 Postscaler
1001 =1:10 Postscaler
1010 =1:11 Postscaler
1011 =1:12 Postscaler
1100 =1:13 Postscaler
1101 =1:14 Postscaler
1110 =1:15 Postscaler
1111 =1:16 Postscaler

bit 2 **TMR2ON:** Timer2 On bit
1 = Timer2 is on
0 = Timer2 is off

bit 1-0 **T2CKPS<1:0>:** Timer2 Clock Prescale Select bits
00 =Prescaler is 1
01 =Prescaler is 4
1x =Prescaler is 16

TABLE 8-1: SUMMARY OF REGISTERS ASSOCIATED WITH TIMER2

Name	Bit 7	Bit 6	Bit 5	Bit 4	Bit 3	Bit 2	Bit 1	Bit 0	Value on POR, BOR	Value on all other Resets
INTCON	GIE	PEIE	T0IE	INTE	GPIE	T0IF	INTF	GPIF	0000 0000	0000 0000
PIE1	—	ADIE(1)	CCP1IE(1)	—	CMIE	—	TMR2IE(1)	TMR1IE	-00- 0-00	-00- 0-00
PIR1	—	ADIF(1)	CCP1IF(1)	—	CMIF	—	TMR2IF(1)	TMR1IF	-00- 0-00	-00- 0-00
PR2(1)	Timer2 Module Period Register								1111 1111	1111 1111
TMR2(1)	Holding Register for the 8-bit TMR2 Register								0000 0000	0000 0000
T2CON(1)	—	TOUTPS3	TOUTPS2	TOUTPS1	TOUTPS0	TMR2ON	T2CKPS1	T2CKPS0	-000 0000	-000 0000

Legend: x = unknown, u = unchanged, - = unimplemented read as ‘0’. Shaded cells are not used for Timer2 module.
Note 1: For PIC12F615/617/HV615 only.

© 2010 Microchip Technology Inc.

9.0 COMPARATOR MODULE

The comparator can be used to interface analog circuits to a digital circuit by comparing two analog voltages and providing a digital indication of their relative magnitudes. The comparator is a very useful mixed signal building block because it provides analog functionality independent of the program execution. The Analog Comparator module includes the following features:

- Programmable input section
- Comparator output is available internally/externally
- Programmable output polarity
- Interrupt-on-change
- Wake-up from Sleep
- PWM shutdown
- Timer1 gate (count enable)
- Output synchronization to Timer1 clock input
- Programmable voltage reference
- User-enable Comparator Hysteresis

9.1 Comparator Overview

The comparator is shown in Figure 9-1 along with the relationship between the analog input levels and the digital output. When the analog voltage at VIN+ is less than the analog voltage at VIN-, the output of the comparator is a digital low level. When the analog voltage at VIN+ is greater than the analog voltage at VIN-, the output of the comparator is a digital high level.

FIGURE 9-1:SINGLE COMPARATOR

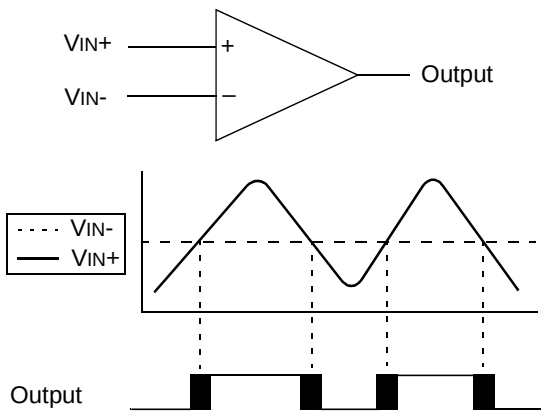

Note: The black areas of the output of the comparator represents the uncertainty due to input offsets and response time.

FIGURE 9-2: COMPARATOR SIMPLIFIED BLOCK DIAGRAM

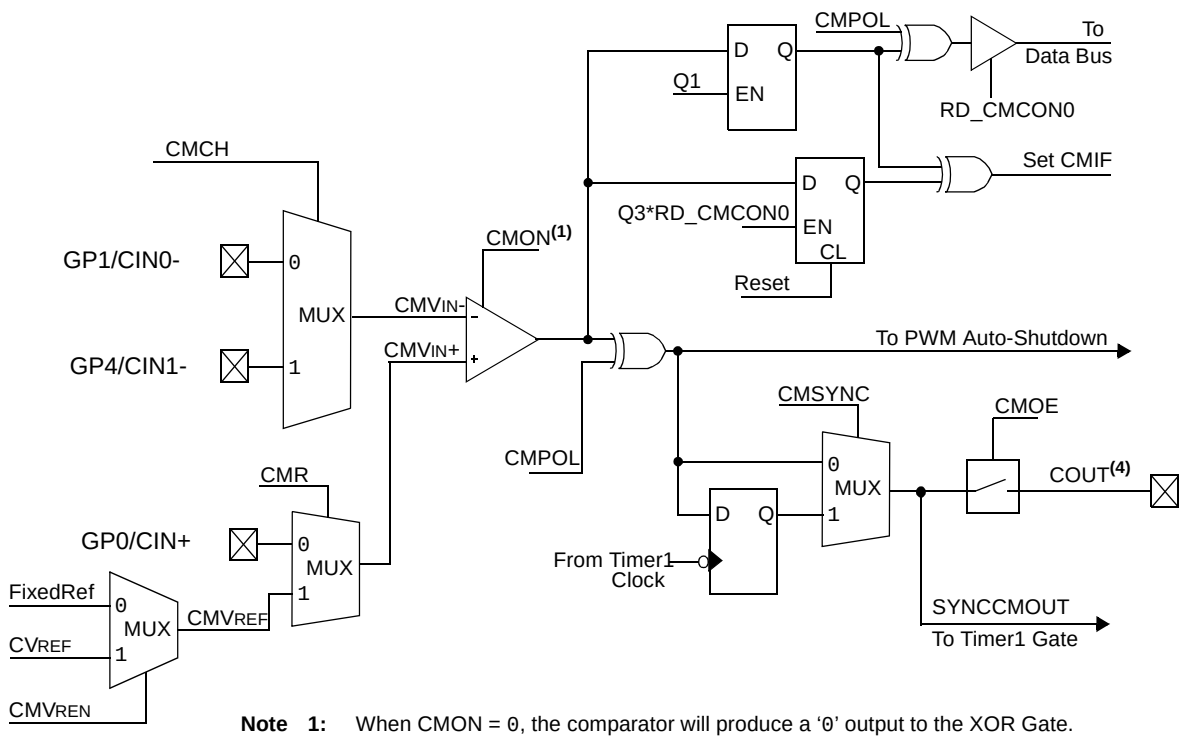

Note 1: When CMON = 0, the comparator will produce a '0' output to the XOR Gate.
2: Q1 and Q3 are phases of the four-phase system clock (FOSC).
3: Q1 is held high during Sleep mode.
4: Output shown for reference only. See I/O port pin diagram for more details.

9.2 Analog Input Connection Considerations

A simplified circuit for an analog input is shown in Figure 9-3. Since the analog input pins share their connection with a digital input, they have reverse biased ESD protection diodes to V_{DD} and V_{SS}. The analog input, therefore, must be between V_{SS} and V_{DD}. If the input voltage deviates from this range by more than 0.6V in either direction, one of the diodes is forward biased and a latch-up may occur.

A maximum source impedance of 10 kΩ is recommended for the analog sources. Also, any external component connected to an analog input pin, such as a capacitor or a Zener diode, should have very little leakage current to minimize inaccuracies introduced.

> **Note 1:** When reading a GPIO register, all pins configured as analog inputs will read as a '0'. Pins configured as digital inputs will convert as an analog input, according to the input specification.
>
> **2:** Analog levels on any pin defined as a digital input, may cause the input buffer to consume more current than is specified.

FIGURE 9-3: ANALOG INPUT MODEL

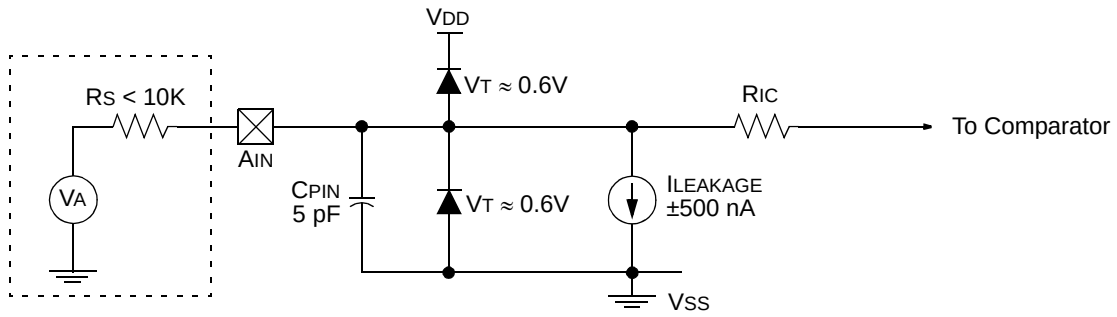

Legend:
- C_{PIN} = Input Capacitance
- $I_{LEAKAGE}$ = Leakage Current at the pin due to various junctions
- R_{IC} = Interconnect Resistance
- R_S = Source Impedance
- V_A = Analog Voltage
- V_T = Threshold Voltage

© 2010 Microchip Technology Inc.

9.3 Comparator Control

The comparator has two control and Configuration registers: CMCON0 and CMCON1. The CMCON1 register is used for controlling the interaction with Timer1 and simultaneously reading the comparator output.

The CMCON0 register (Register 9-1) contain the control and Status bits for the following:

- Enable
- Input selection
- Reference selection
- Output selection
- Output polarity

9.3.1 COMPARATOR ENABLE

Setting the CMON bit of the CMCON0 register enables the comparator for operation. Clearing the CMON bit disables the comparator for minimum current consumption.

9.3.2 COMPARATOR INPUT SELECTION

The CMCH bit of the CMCON0 register directs one of four analog input pins to the comparator inverting input.

Note:	To use CIN+ and CIN- pins as analog inputs, the appropriate bits must be set in the ANSEL register and the corresponding TRIS bits must also be set to disable the output drivers.

9.3.3 COMPARATOR REFERENCE SELECTION

Setting the CMR bit of the CMxCON0 register directs an internal voltage reference or an analog input pin to the non-inverting input of the comparator. See **Section 9.10 "Comparator Voltage Reference"** for more information on the internal voltage reference module.

9.3.4 COMPARATOR OUTPUT SELECTION

The output of the comparator can be monitored by reading either the COUT bit of the CMCON0 register. In order to make the output available for an external connection, the following conditions must be true:

- CMOE bit of the CMxCON0 register must be set
- Corresponding TRIS bit must be cleared
- CMON bit of the CMCON0 register must be set.

Note 1:	The CMOE bit overrides the PORT data latch. Setting the CMON has no impact on the port override.
2:	The internal output of the comparator is latched with each instruction cycle. Unless otherwise specified, external outputs are not latched.

9.3.5 COMPARATOR OUTPUT POLARITY

Inverting the output of the comparator is functionally equivalent to swapping the comparator inputs. The polarity of the comparator output can be inverted by setting the CMPOL bit of the CMCON0 register. Clearing CMPOL results in a non-inverted output. A complete table showing the output state versus input conditions and the polarity bit is shown in Table 9-1.

TABLE 9-1: OUTPUT STATE VS. INPUT CONDITIONS

Input Conditions	CMPOL	COUT
$CMV_{IN-} > CMV_{IN+}$	0	0
$CMV_{IN-} < CMV_{IN+}$	0	1
$CMV_{IN-} > CMV_{IN+}$	1	1
$CMV_{IN-} < CMV_{IN+}$	1	0

Note: COUT refers to both the register bit and output pin.

9.4 Comparator Response Time

The comparator output is indeterminate for a period of time after the change of an input source or the selection of a new reference voltage. This period is referred to as the response time. The response time of the comparator differs from the settling time of the voltage reference. Therefore, both of these times must be considered when determining the total response time to a comparator input change. See **Section 16.0 "Electrical Specifications"** for more details.

9.5 Comparator Interrupt Operation

The comparator interrupt flag can be set whenever there is a change in the output value of the comparator. Changes are recognized by means of a mismatch circuit which consists of two latches and an exclusive-or gate (see Figure 9-4 and Figure 9-5). One latch is updated with the comparator output level when the CMCON0 register is read. This latch retains the value until the next read of the CMCON0 register or the occurrence of a Reset. The other latch of the mismatch circuit is updated on every Q1 system clock. A mismatch condition will occur when a comparator output change is clocked through the second latch on the Q1 clock cycle. At this point the two mismatch latches have opposite output levels which is detected by the exclusive-or gate and fed to the interrupt circuitry. The mismatch condition persists until either the CMCON0 register is read or the comparator output returns to the previous state.

> **Note 1:** A write operation to the CMCON0 register will also clear the mismatch condition because all writes include a read operation at the beginning of the write cycle.
>
> **2:** Comparator interrupts will operate correctly regardless of the state of CMOE.

The comparator interrupt is set by the mismatch edge and not the mismatch level. This means that the interrupt flag can be reset without the additional step of reading or writing the CMCON0 register to clear the mismatch registers. When the mismatch registers are cleared, an interrupt will occur upon the comparator's return to the previous state, otherwise no interrupt will be generated.

Software will need to maintain information about the status of the comparator output, as read from the CMCON1 register, to determine the actual change that has occurred.

The CMIF bit of the PIR1 register is the Comparator Interrupt flag. This bit must be reset in software by clearing it to '0'. Since it is also possible to write a '1' to this register, an interrupt can be generated.

The CMIE bit of the PIE1 register and the PEIE and GIE bits of the INTCON register must all be set to enable comparator interrupts. If any of these bits are cleared, the interrupt is not enabled, although the CMIF bit of the PIR1 register will still be set if an interrupt condition occurs.

FIGURE 9-4: COMPARATOR INTERRUPT TIMING W/O CMCON0 READ

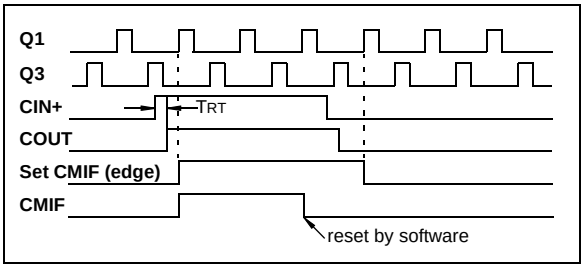

FIGURE 9-5: COMPARATOR INTERRUPT TIMING WITH CMCON0 READ

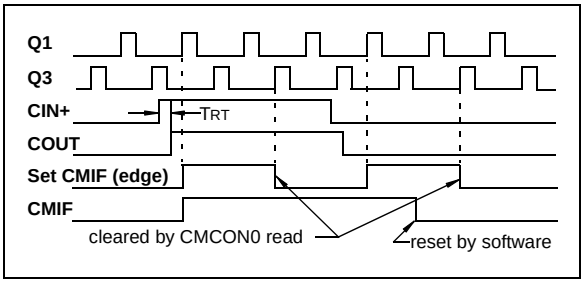

> **Note 1:** If a change in the CMCON0 register (COUT) should occur when a read operation is being executed (start of the Q2 cycle), then the CMIF of the PIR1 register interrupt flag may not get set.
>
> **2:** When a comparator is first enabled, bias circuitry in the comparator module may cause an invalid output from the comparator until the bias circuitry is stable. Allow about 1 μs for bias settling then clear the mismatch condition and interrupt flags before enabling comparator interrupts.

© 2010 Microchip Technology Inc.

9.6 Operation During Sleep

The comparator, if enabled before entering Sleep mode, remains active during Sleep. The additional current consumed by the comparator is shown separately in the **Section 16.0 "Electrical Specifications"**. If the comparator is not used to wake the device, power consumption can be minimized while in Sleep mode by turning off the comparator. The comparator is turned off by clearing the CMON bit of the CMCON0 register.

A change to the comparator output can wake-up the device from Sleep. To enable the comparator to wake the device from Sleep, the CMIE bit of the PIE1 register and the PEIE bit of the INTCON register must be set. The instruction following the SLEEP instruction always executes following a wake from Sleep. If the GIE bit of the INTCON register is also set, the device will then execute the Interrupt Service Routine.

9.7 Effects of a Reset

A device Reset forces the CMCON1 register to its Reset state. This sets the comparator and the voltage reference to the OFF state.

REGISTER 9-1: CMCON0: COMPARATOR CONTROL REGISTER 0

R/W-0	R-0	R/W-0	R/W-0	U-0	R/W-0	U-0	R/W-0
CMON	COUT	CMOE	CMPOL	—	CMR	—	CMCH
bit 7							bit 0

Legend:			
R = Readable bit	W = Writable bit	U = Unimplemented bit, read as ‘0’	
-n = Value at POR	‘1’ = Bit is set	‘0’ = Bit is cleared	x = Bit is unknown

bit 7 **CMON:** Comparator Enable bit
1 = Comparator is enabled
0 = Comparator is disabled

bit 6 **COUT:** Comparator Output bit
If C1POL = 1 (inverted polarity):
COUT = 0 when $CMV_{IN}+ > CMV_{IN}-$
COUT = 1 when $CMV_{IN}+ < CMV_{IN}-$
If C1POL = 0 (non-inverted polarity):
COUT = 1 when $CMV_{IN}+ > CMV_{IN}-$
COUT = 0 when $CMV_{IN}+ < CMV_{IN}-$

bit 5 **CMOE:** Comparator Output Enable bit
1 = COUT is present on the COUT pin(1)
0 = COUT is internal only

bit 4 **CMPOL:** Comparator Output Polarity Select bit
1 = COUT logic is inverted
0 = COUT logic is not inverted

bit 3 **Unimplemented:** Read as ‘0’

bit 2 **CMR:** Comparator Reference Select bit (non-inverting input)
1 = $CMV_{IN}+$ connects to CMV_{REF} output
0 = $CMV_{IN}+$ connects to CIN+ pin

bit 1 **Unimplemented:** Read as ‘0’

bit 0 **CMCH:** Comparator C1 Channel Select bit
0 = $CMV_{IN}-$ pin of the Comparator connects to CIN0-
1 = $CMV_{IN}-$ pin of the Comparator connects to CIN1-

Note 1: Comparator output requires the following three conditions: CMOE = 1, CMON = 1 and corresponding port TRIS bit = 0.

© 2010 Microchip Technology Inc.

9.8 Comparator Gating Timer1

This feature can be used to time the duration or interval of analog events. Clearing the T1GSS bit of the CMCON1 register will enable Timer1 to increment based on the output of the comparator. This requires that Timer1 is on and gating is enabled. See **Section 7.0 "Timer1 Module with Gate Control"** for details.

It is recommended to synchronize the comparator with Timer1 by setting the CMSYNC bit when the comparator is used as the Timer1 gate source. This ensures Timer1 does not miss an increment if the comparator changes during an increment.

9.9 Synchronizing Comparator Output to Timer1

The comparator output can be synchronized with Timer1 by setting the CMSYNC bit of the CMCON1 register. When enabled, the comparator output is latched on the falling edge of the Timer1 clock source. If a prescaler is used with Timer1, the comparator output is latched after the prescaling function. To prevent a race condition, the comparator output is latched on the falling edge of the Timer1 clock source and Timer1 increments on the rising edge of its clock source. See the Comparator Block Diagram (Figure 9-2) and the Timer1 Block Diagram (Figure 7-1) for more information.

REGISTER 9-2: CMCON1: COMPARATOR CONTROL REGISTER 1

U-0	U-0	U-0	R/W-0	R/W-0	U-0	R/W-1	R/W-0
—	—	—	T1ACS	CMHYS	—	T1GSS	CMSYNC
bit 7							bit 0

Legend:			
R = Readable bit	W = Writable bit	U = Unimplemented bit, read as '0'	
-n = Value at POR	'1' = Bit is set	'0' = Bit is cleared	x = Bit is unknown

bit 7-5 **Unimplemented:** Read as '0'

bit 4 **T1ACS:** Timer1 Alternate Clock Select bit
1 = Timer 1 Clock Source is System Clock (FOSC)
0 = Timer 1 Clock Source is Instruction Clock (FOSC\4)

bit 3 **CMHYS:** Comparator Hysteresis Select bit
1 = Comparator Hysteresis enabled
0 = Comparator Hysteresis disabled

bit 2 **Unimplemented:** Read as '0'

bit 1 **T1GSS:** Timer1 Gate Source Select bit(1)
1 = Timer 1 Gate Source is $\overline{T1G}$ pin (pin should be configured as digital input)
0 = Timer 1 Gate Source is comparator output

bit 0 **CMSYNC:** Comparator Output Synchronization bit(2)
1 = Output is synchronized with falling edge of Timer1 clock
0 = Output is asynchronous

Note 1: Refer to **Section 7.6 "Timer1 Gate"**.
2: Refer to Figure 9-2.

9.10 Comparator Voltage Reference

The Comparator Voltage Reference module provides an internally generated voltage reference for the comparators. The following features are available:

- Independent from Comparator operation
- 16-level voltage range
- Output clamped to VSS
- Ratiometric with VDD
- Fixed Reference (0.6)

The VRCON register (Register 9-3) controls the Voltage Reference module shown in Register 9-6.

9.10.1 INDEPENDENT OPERATION

The comparator voltage reference is independent of the comparator configuration. Setting the VREN bit of the VRCON register will enable the voltage reference.

9.10.2 OUTPUT VOLTAGE SELECTION

The CVREF voltage reference has 2 ranges with 16 voltage levels in each range. Range selection is controlled by the VRR bit of the VRCON register. The 16 levels are set with the VR<3:0> bits of the VRCON register.

The CVREF output voltage is determined by the following equations:

EQUATION 9-1: CVREF OUTPUT VOLTAGE

$$V_{RR} = 1 \text{ (low range):}$$
$$CV_{REF} = (VR<3:0>/24) \times V_{DD}$$
$$V_{RR} = 0 \text{ (high range):}$$
$$CV_{REF} = (V_{DD}/4) + (VR<3:0> \times V_{DD}/32)$$

The full range of VSS to VDD cannot be realized due to the construction of the module. See Figure 9-6.

9.10.3 OUTPUT CLAMPED TO VSS

The CVREF output voltage can be set to Vss with no power consumption by configuring VRCON as follows:

- FVREN = 0

This allows the comparator to detect a zero-crossing while not consuming additional CVREF module current.

9.10.4 OUTPUT RATIOMETRIC TO VDD

The comparator voltage reference is VDD derived and therefore, the CVREF output changes with fluctuations in VDD. The tested absolute accuracy of the Comparator Voltage Reference can be found in **Section 16.0 “Electrical Specifications”**.

9.10.5 FIXED VOLTAGE REFERENCE

The fixed voltage reference is independent of VDD, with a nominal output voltage of 0.6V. This reference can be enabled by setting the FVREN bit of the VRCON register to ‘1’. This reference is always enabled when the HFINTOSC oscillator is active.

9.10.6 FIXED VOLTAGE REFERENCE STABILIZATION PERIOD

When the Fixed Voltage Reference module is enabled, it will require some time for the reference and its amplifier circuits to stabilize. The user program must include a small delay routine to allow the module to settle. See **Section 16.0 “Electrical Specifications”** for the minimum delay requirement.

9.10.7 VOLTAGE REFERENCE SELECTION

Multiplexers on the output of the Voltage Reference module enable selection of either the CVREF or fixed voltage reference for use by the comparators.

Setting the CMVREN bit of the VRCON register enables current to flow in the CVREF voltage divider and selects the CVREF voltage for use by the Comparator. Clearing the CMVREN bit selects the fixed voltage for use by the Comparator.

When the CMVREN bit is cleared, current flow in the CVREF voltage divider is disabled minimizing the power drain of the voltage reference peripheral.

© 2010 Microchip Technology Inc.

FIGURE 9-6: COMPARATOR VOLTAGE REFERENCE BLOCK DIAGRAM

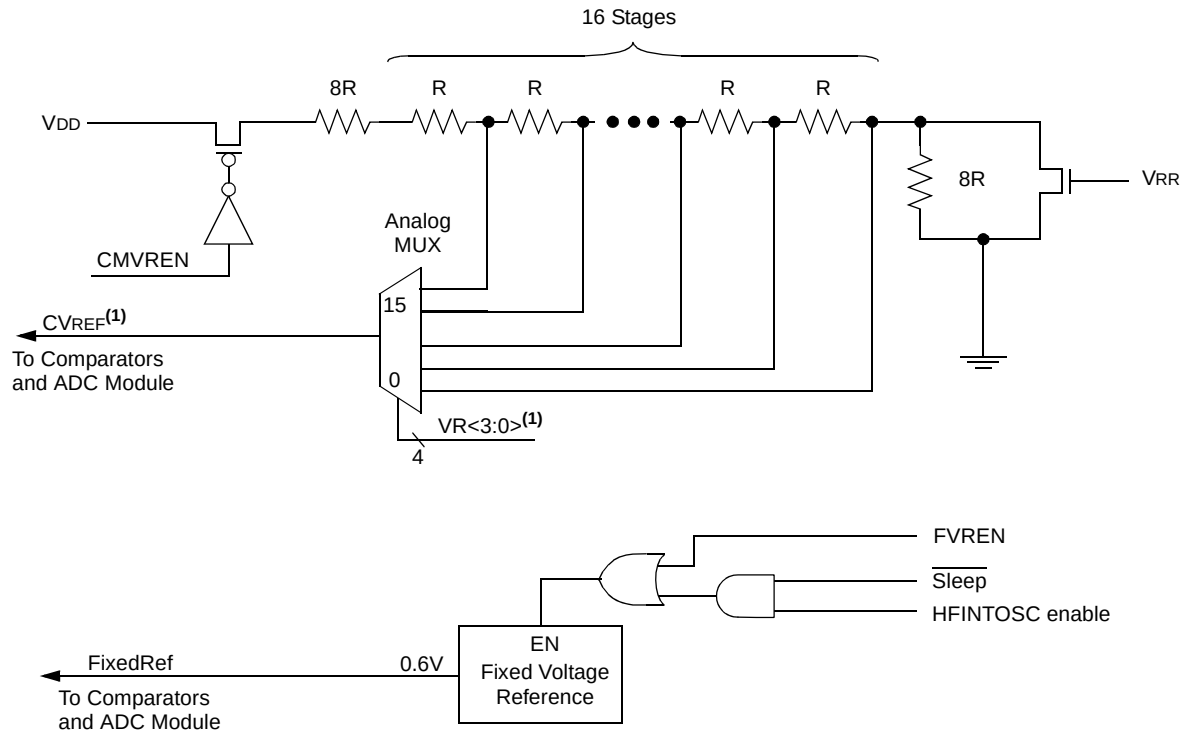

Note 1: Care should be taken to ensure CVREF remains within the comparator common mode input range. See **Section 16.0 "Electrical Specifications"** for more detail.

REGISTER 9-3: VRCON: VOLTAGE REFERENCE CONTROL REGISTER

R/W-0	U-0	R/W-0	R/W-0	R/W-0	R/W-0	R/W-0	R/W-0
CMVREN	—	VRR	FVREN	VR3	VR2	VR1	VR0
bit 7							bit 0

Legend:			
R = Readable bit	W = Writable bit	U = Unimplemented bit, read as ‘0’	
-n = Value at POR	‘1’ = Bit is set	‘0’ = Bit is cleared	x = Bit is unknown

bit 7 **CMVREN:** Comparator Voltage Reference Enable bit[1, 2]
`1` = CVREF circuit powered on and routed to CVREF input of the Comparator
`0` = 0.6 Volt constant reference routed to CVREF input of the Comparator

bit 6 **Unimplemented:** Read as ‘`0`’

bit 5 **VRR:** CVREF Range Selection bit
`1` = Low range
`0` = High range

bit 4 **FVREN:** 0.6V Reference Enable bit[2]
`1` = Enabled
`0` = Disabled

bit 3-0 **VR<3:0>:** Comparator Voltage Reference CVREF Value Selection bits ($0 \leq$ VR<3:0> ≤ 15)
When VRR = `1`: CVREF = (VR<3:0>/24) * VDD
When VRR = `0`: CVREF = VDD/4 + (VR<3:0>/32) * VDD

Note 1: When CMVREN is low, the CVREF circuit is powered down and does not contribute to IDD current.
2: When CMVREN is low and the FVREN bit is low, the CVREF signal should provide Vss to the comparator.

© 2010 Microchip Technology Inc.

9.11 Comparator Hysteresis

Each comparator has built-in hysteresis that is user enabled by setting the CMHYS bit of the CMCON1 register. The hysteresis feature can help filter noise and reduce multiple comparator output transitions when the output is changing state.

Figure 9-7 shows the relationship between the analog input levels and digital output of a comparator with and without hysteresis. The output of the comparator changes from a low state to a high state only when the analog voltage at V_{IN+} rises above the upper hysteresis threshold (V_{H+}). The output of the comparator changes from a high state to a low state only when the analog voltage at V_{IN+} falls below the lower hysteresis threshold (V_{H-}).

FIGURE 9-7: COMPARATOR HYSTERESIS

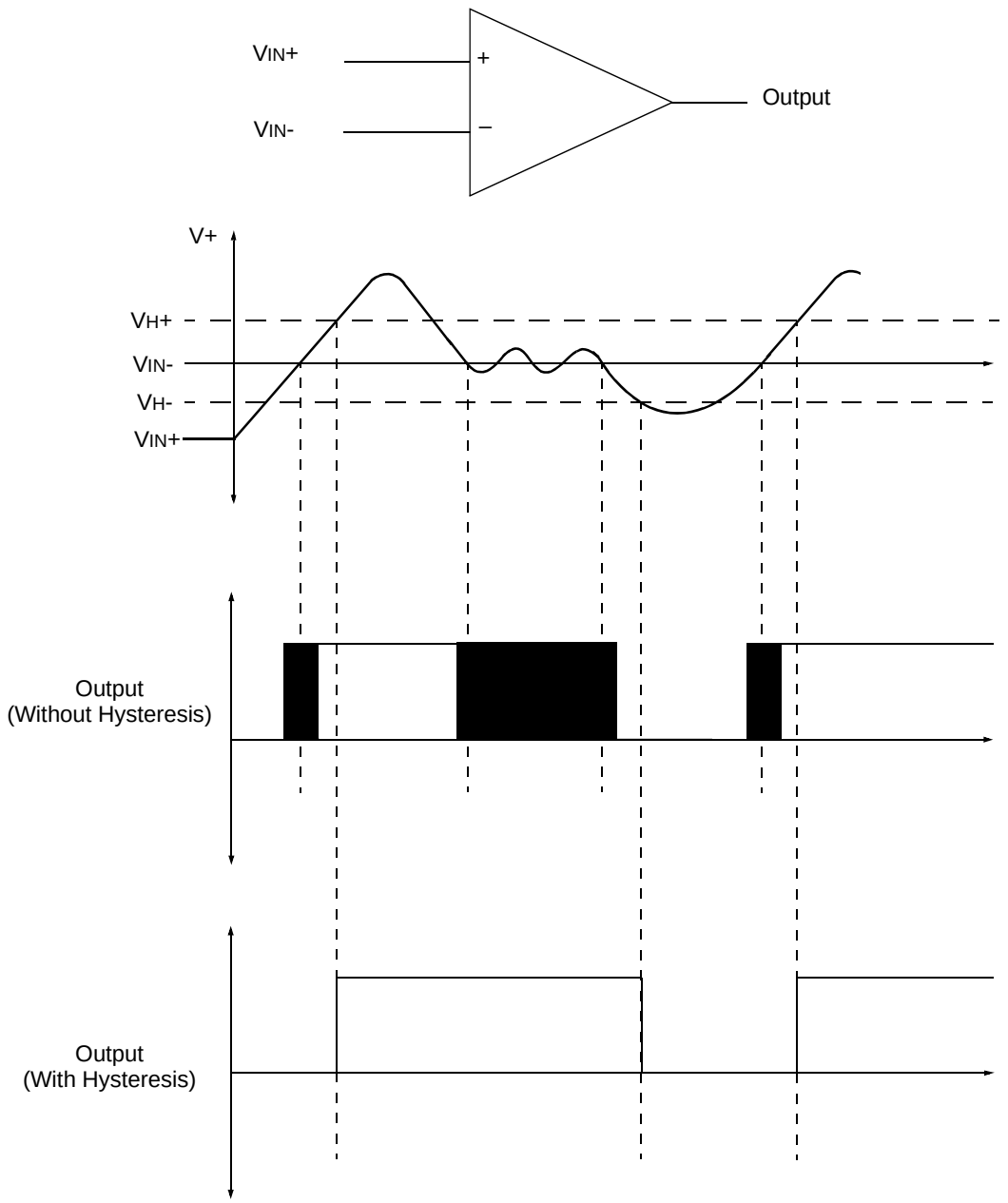

Note: The black areas of the comparator output represents the uncertainty due to input offsets and response time.

TABLE 9-2: SUMMARY OF REGISTERS ASSOCIATED WITH THE COMPARATOR AND VOLTAGE REFERENCE MODULES

Name	Bit 7	Bit 6	Bit 5	Bit 4	Bit 3	Bit 2	Bit 1	Bit 0	Value on POR, BOR	Value on all other Resets
ANSEL	—	ADCS2(1)	ADCS1(1)	ADCS0(1)	ANS3	ANS2(1)	ANS1	ANS0	-000 1111	-000 1111
CMCON0	CMON	COUT	CMOE	CMPOL	—	CMR	—	CMCH	0000 -000	0000 -000
CMCON1	—	—	—	T1ACS	CMHYS	—	T1GSS	CMSYNC	0000 0000	0000 0000
INTCON	GIE	PEIE	T0IE	INTE	GPIE	T0IF	INTF	GPIF	0000 000x	0000 000x
PIE1	—	ADIE(1)	CCP1IE(1)	—	CMIE	—	TMR2IE(1)	TMR1IE	-00- 0-00	-00- 0-00
PIR1	—	ADIF(1)	CCP1IF(1)	—	CMIF	—	TMR2IF(1)	TMR1IF	-00- 0-00	-00- 0-00
GPIO	—	—	GP5	GP4	GP3	GP2	GP1	GP0	--xx xxxx	--uu uuuu
TRISIO	—	—	TRISIO5	TRISIO4	TRISIO3	TRISIO2	TRISIO1	TRISIO0	--11 1111	--11 1111
VRCON	CMVREN	—	VRR	FVREN	VR3	VR2	VR1	VR0	0-00 0000	0-00 0000

Legend: x = unknown, u = unchanged, - = unimplemented, read as '0'. Shaded cells are not used for comparator.

Note 1: For PIC12F615/617/HV615 only.

© 2010 Microchip Technology Inc.

10.0 ANALOG-TO-DIGITAL CONVERTER (ADC) MODULE (PIC12F615/617/HV615 ONLY)

The Analog-to-Digital Converter (ADC) allows conversion of an analog input signal to a 10-bit binary representation of that signal. This device uses analog inputs, which are multiplexed into a single sample and hold circuit. The output of the sample and hold is connected to the input of the converter. The converter generates a 10-bit binary result via successive approximation and stores the conversion result into the ADC result registers (ADRESL and ADRESH).

The ADC voltage reference is software selectable to either V_{DD} or a voltage applied to the external reference pins.

The ADC can generate an interrupt upon completion of a conversion. This interrupt can be used to wake-up the device from Sleep.

Figure 10-1 shows the block diagram of the ADC.

Note: The ADRESL and ADRESH registers are Read Only.

FIGURE 10-1: ADC BLOCK DIAGRAM

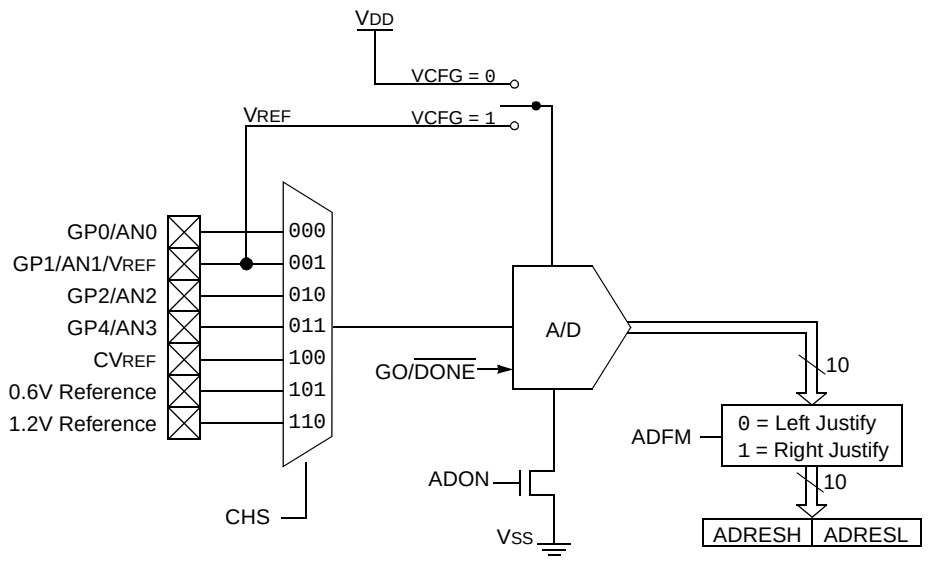

10.1 ADC Configuration

When configuring and using the ADC the following functions must be considered:

- Port configuration
- Channel selection
- ADC voltage reference selection
- ADC conversion clock source
- Interrupt control
- Results formatting

10.1.1 PORT CONFIGURATION

The ADC can be used to convert both analog and digital signals. When converting analog signals, the I/O pin should be configured for analog by setting the associated TRIS and ANSEL bits. See the corresponding port section for more information.

Note:	Analog voltages on any pin that is defined as a digital input may cause the input buffer to conduct excess current.

10.1.2 CHANNEL SELECTION

The CHS bits of the ADCON0 register determine which channel is connected to the sample and hold circuit.

When changing channels, a delay is required before starting the next conversion. Refer to **Section 10.2 "ADC Operation"** for more information.

10.1.3 ADC VOLTAGE REFERENCE

The VCFG bit of the ADCON0 register provides control of the positive voltage reference. The positive voltage reference can be either VDD or an external voltage source. The negative voltage reference is always connected to the ground reference.

10.1.4 CONVERSION CLOCK

The source of the conversion clock is software selectable via the ADCS bits of the ANSEL register. There are seven possible clock options:

- FOSC/2
- FOSC/4
- FOSC/8
- FOSC/16
- FOSC/32
- FOSC/64
- FRC (dedicated internal oscillator)

The time to complete one bit conversion is defined as TAD. One full 10-bit conversion requires 11 TAD periods as shown in Figure 10-3.

For correct conversion, the appropriate TAD specification must be met. See A/D conversion requirements in **Section 16.0 "Electrical Specifications"** for more information. Table 10-1 gives examples of appropriate ADC clock selections.

Note:	Unless using the FRC, any changes in the system clock frequency will change the ADC clock frequency, which may adversely affect the ADC result.

© 2010 Microchip Technology Inc.

TABLE 10-1: ADC CLOCK PERIOD (T_{AD}) VS. DEVICE OPERATING FREQUENCIES (VDD ≥ 3.0V)

ADC Clock Period (T_{AD})		Device Frequency (F_{OSC})			
ADC Clock Source	**ADCS<2:0>**	**20 MHz**	**8 MHz**	**4 MHz**	**1 MHz**
F_{OSC}/2	000	100 ns(2)	250 ns(2)	500 ns(2)	2.0 μs
F_{OSC}/4	100	200 ns(2)	500 ns(2)	1.0 μs(2)	4.0 μs
F_{OSC}/8	001	400 ns(2)	1.0 μs(2)	2.0 μs	8.0 μs(3)
F_{OSC}/16	101	800 ns(2)	2.0 μs	4.0 μs	16.0 μs(3)
F_{OSC}/32	010	1.6 μs	4.0 μs	8.0 μs(3)	32.0 μs(3)
F_{OSC}/64	110	3.2 μs	8.0 μs(3)	16.0 μs(3)	64.0 μs(3)
FRC	x11	2-6 μs(1,4)	2-6 μs(1,4)	2-6 μs(1,4)	2-6 μs(1,4)

Legend: Shaded cells are outside of recommended range.

Note 1: The FRC source has a typical T_{AD} time of 4 μs for V_{DD} > 3.0V.

2: These values violate the minimum required T_{AD} time.

3: For faster conversion times, the selection of another clock source is recommended.

4: When the device frequency is greater than 1 MHz, the FRC clock source is only recommended if the conversion will be performed during Sleep.

FIGURE 10-2: ANALOG-TO-DIGITAL CONVERSION T_{AD} CYCLES

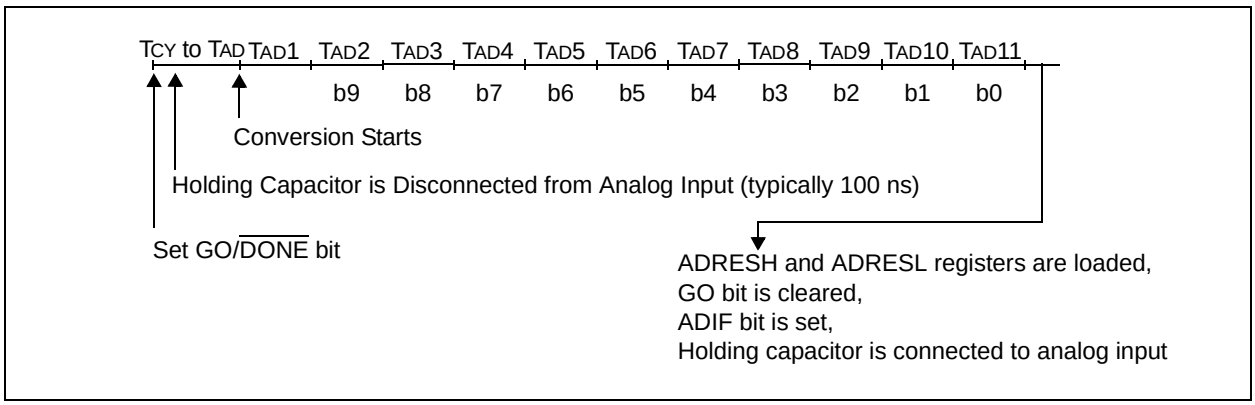

10.1.5 INTERRUPTS

The ADC module allows for the ability to generate an interrupt upon completion of an Analog-to-Digital conversion. The ADC interrupt flag is the ADIF bit in the PIR1 register. The ADC interrupt enable is the ADIE bit in the PIE1 register. The ADIF bit must be cleared in software.

Note:	The ADIF bit is set at the completion of every conversion, regardless of whether or not the ADC interrupt is enabled.

This interrupt can be generated while the device is operating or while in Sleep. If the device is in Sleep, the interrupt will wake-up the device. Upon waking from Sleep, the next instruction following the SLEEP instruction is always executed. If the user is attempting to wake-up from Sleep and resume in-line code execution, the global interrupt must be disabled. If the global interrupt is enabled, execution will switch to the Interrupt Service Routine.

Please see **Section 10.1.5 "Interrupts"** for more information.

10.1.6 RESULT FORMATTING

The 10-bit A/D conversion result can be supplied in two formats, left justified or right justified. The ADFM bit of the ADCON0 register controls the output format.

Figure 10-4 shows the two output formats.

FIGURE 10-3: 10-BIT A/D CONVERSION RESULT FORMAT

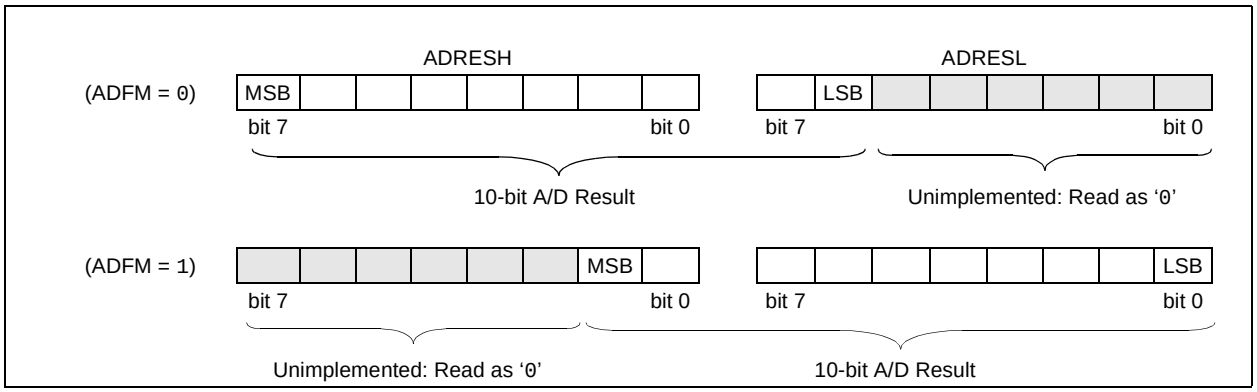

10.2 ADC Operation

10.2.1 STARTING A CONVERSION

To enable the ADC module, the ADON bit of the ADCON0 register must be set to a '1'. Setting the GO/$\overline{\text{DONE}}$ bit of the ADCON0 register to a '1' will start the Analog-to-Digital conversion.

Note:	The GO/$\overline{\text{DONE}}$ bit should not be set in the same instruction that turns on the ADC. Refer to **Section 10.2.6 "A/D Conversion Procedure"**.

10.2.2 COMPLETION OF A CONVERSION

When the conversion is complete, the ADC module will:

- Clear the GO/$\overline{\text{DONE}}$ bit
- Set the ADIF flag bit
- Update the ADRESH:ADRESL registers with new conversion result

10.2.3 TERMINATING A CONVERSION

If a conversion must be terminated before completion, the GO/$\overline{\text{DONE}}$ bit can be cleared in software. The ADRESH:ADRESL registers will not be updated with the partially complete Analog-to-Digital conversion sample. Instead, the ADRESH:ADRESL register pair will retain the value of the previous conversion. Additionally, a 2 TAD delay is required before another acquisition can be initiated. Following this delay, an input acquisition is automatically started on the selected channel.

Note:	A device Reset forces all registers to their Reset state. Thus, the ADC module is turned off and any pending conversion is terminated.

10.2.4 ADC OPERATION DURING SLEEP

The ADC module can operate during Sleep. This requires the ADC clock source to be set to the FRC option. When the FRC clock source is selected, the ADC waits one additional instruction before starting the conversion. This allows the SLEEP instruction to be executed, which can reduce system noise during the conversion. If the ADC interrupt is enabled, the device will wake-up from Sleep when the conversion completes. If the ADC interrupt is disabled, the ADC module is turned off after the conversion completes, although the ADON bit remains set.

When the ADC clock source is something other than FRC, a SLEEP instruction causes the present conversion to be aborted and the ADC module is turned off, although the ADON bit remains set.

10.2.5 SPECIAL EVENT TRIGGER

The ECCP Special Event Trigger allows periodic ADC measurements without software intervention. When this trigger occurs, the GO/$\overline{\text{DONE}}$ bit is set by hardware and the Timer1 counter resets to zero.

Using the Special Event Trigger does not assure proper ADC timing. It is the user's responsibility to ensure that the ADC timing requirements are met.

See **Section 11.0 "Enhanced Capture/Compare/PWM (With Auto-Shutdown and Dead Band) Module (PIC12F615/617/HV615 only)"** for more information.

© 2010 Microchip Technology Inc.

10.2.6 A/D CONVERSION PROCEDURE

This is an example procedure for using the ADC to perform an Analog-to-Digital conversion:

1. Configure Port:
   - Disable pin output driver (See TRIS register)
   - Configure pin as analog
2. Configure the ADC module:
   - Select ADC conversion clock
   - Configure voltage reference
   - Select ADC input channel
   - Select result format
   - Turn on ADC module
3. Configure ADC interrupt (optional):
   - Clear ADC interrupt flag
   - Enable ADC interrupt
   - Enable peripheral interrupt
   - Enable global interrupt(1)
4. Wait the required acquisition time(2).
5. Start conversion by setting the GO/$\overline{\text{DONE}}$ bit.
6. Wait for ADC conversion to complete by one of the following:
   - Polling the GO/$\overline{\text{DONE}}$ bit
   - Waiting for the ADC interrupt (interrupts enabled)
7. Read ADC Result
8. Clear the ADC interrupt flag (required if interrupt is enabled).

Note 1: The global interrupt can be disabled if the user is attempting to wake-up from Sleep and resume in-line code execution.

2: See **Section 10.3 "A/D Acquisition Requirements"**.

EXAMPLE 10-1: A/D CONVERSION

```
;This code block configures the ADC
;for polling, Vdd reference, Frc clock
;and GP0 input.
;
;Conversion start & polling for completion
; are included.
;
BANKSEL  TRISIO       ;
BSF      TRISIO,0     ;Set GP0 to input
BANKSEL  ANSEL        ;
MOVLW    B'01110001'  ;ADC Frc clock,
IORWF    ANSEL        ; and GP0 as analog
BANKSEL  ADCON0       ;
MOVLW    B'10000001'  ;Right justify,
MOVWF    ADCON0       ;Vdd Vref, AN0, On
CALL     SampleTime   ;Acquisiton delay
BSF      ADCON0,GO    ;Start conversion
BTFSC    ADCON0,GO    ;Is conversion done?
GOTO     $-1          ;No, test again
BANKSEL  ADRESH       ;
MOVF     ADRESH,W     ;Read upper 2 bits
MOVWF    RESULTHI     ;Store in GPR space
BANKSEL  ADRESL       ;
MOVF     ADRESL,W     ;Read lower 8 bits
MOVWF    RESULTLO     ;Store in GPR space
```

10.2.7 ADC REGISTER DEFINITIONS

The following registers are used to control the operation of the ADC.

REGISTER 10-1: ADCON0: A/D CONTROL REGISTER 0

R/W-0	R/W-0	U-0	R/W-0	R/W-0	R/W-0	R/W-0	R/W-0
ADFM	VCFG	—	CHS2	CHS1	CHS0	GO/$\overline{\text{DONE}}$	ADON
bit 7							bit 0

Legend:			
R = Readable bit	W = Writable bit	U = Unimplemented bit, read as ‘0’	
-n = Value at POR	‘1’ = Bit is set	‘0’ = Bit is cleared	x = Bit is unknown

bit 7 **ADFM:** A/D Conversion Result Format Select bit
1 = Right justified
0 = Left justified

bit 6 **VCFG:** Voltage Reference bit
1 = V_{REF} pin
0 = V_{DD}

bit 5 **Unimplemented:** Read as ‘0’

bit 4-2 **CHS<2:0>: Analog Channel Select bits**
000 = Channel 00 (AN0)
001 = Channel 01 (AN1)
010 = Channel 02 (AN2)
011 = Channel 03 (AN3)
100 = CV_{REF}
101 = 0.6V Reference
110 = 1.2V Reference
111 = Reserved. Do not use.

bit 1 **GO/$\overline{\text{DONE}}$:** A/D Conversion Status bit
1 = A/D conversion cycle in progress. Setting this bit starts an A/D conversion cycle.
This bit is automatically cleared by hardware when the A/D conversion has completed.
0 = A/D conversion completed/not in progress

bit 0 **ADON:** ADC Enable bit
1 = ADC is enabled
0 = ADC is disabled and consumes no operating current

Note 1: When the CHS<2:0> bits change to select the 1.2V or 0.6V reference, the reference output voltage will have a transient. If the Comparator module uses this 0.6V reference voltage, the comparator output may momentarily change state due to the transient.

© 2010 Microchip Technology Inc.

REGISTER 10-2: ADRESH: ADC RESULT REGISTER HIGH (ADRESH) ADFM = 0 (READ-ONLY)

R-x	R-x	R-x	R-x	R-x	R-x	R-x	R-x
ADRES9	ADRES8	ADRES7	ADRES6	ADRES5	ADRES4	ADRES3	ADRES2
bit 7							bit 0

Legend:			
R = Readable bit	W = Writable bit	U = Unimplemented bit, read as ‘0’	
-n = Value at POR	‘1’ = Bit is set	‘0’ = Bit is cleared	x = Bit is unknown

bit 7-0 **ADRES<9:2>**: ADC Result Register bits
Upper 8 bits of 10-bit conversion result

REGISTER 10-3: ADRESL: ADC RESULT REGISTER LOW (ADRESL) ADFM = 0 (READ-ONLY)

R-x	R-x	U-0	U-0	U-0	U-0	U-0	U-0
ADRES1	ADRES0	—	—	—	—	—	—
bit 7							bit 0

Legend:			
R = Readable bit	W = Writable bit	U = Unimplemented bit, read as ‘0’	
-n = Value at POR	‘1’ = Bit is set	‘0’ = Bit is cleared	x = Bit is unknown

bit 7-6 **ADRES<1:0>**: ADC Result Register bits
Lower 2 bits of 10-bit conversion result

bit 5-0 **Unimplemented:** Read as ‘0’

REGISTER 10-4: ADRESH: ADC RESULT REGISTER HIGH (ADRESH) ADFM = 1 (READ-ONLY)

U-0	U-0	U-0	U-0	U-0	U-0	R-x	R-x
—	—	—	—	—	—	ADRES9	ADRES8
bit 7							bit 0

Legend:			
R = Readable bit	W = Writable bit	U = Unimplemented bit, read as ‘0’	
-n = Value at POR	‘1’ = Bit is set	‘0’ = Bit is cleared	x = Bit is unknown

bit 7-2 **Unimplemented:** Read as ‘0’

bit 1-0 **ADRES<9:8>**: ADC Result Register bits
Upper 2 bits of 10-bit conversion result

REGISTER 10-5: ADRESL: ADC RESULT REGISTER LOW (ADRESL) ADFM = 1 (READ-ONLY)

R-x	R-x	R-x	R-x	R-x	R-x	R-x	R-x
ADRES7	ADRES6	ADRES5	ADRES4	ADRES3	ADRES2	ADRES1	ADRES0
bit 7							bit 0

Legend:			
R = Readable bit	W = Writable bit	U = Unimplemented bit, read as ‘0’	
-n = Value at POR	‘1’ = Bit is set	‘0’ = Bit is cleared	x = Bit is unknown

bit 7-0 **ADRES<7:0>**: ADC Result Register bits
Lower 8 bits of 10-bit conversion result

10.3 A/D Acquisition Requirements

For the ADC to meet its specified accuracy, the charge holding capacitor (C_{HOLD}) must be allowed to fully charge to the input channel voltage level. The Analog Input model is shown in Figure 10-4. The source impedance (R_S) and the internal sampling switch (R_{SS}) impedance directly affect the time required to charge the capacitor C_{HOLD}. The sampling switch (R_{SS}) impedance varies over the device voltage (V_{DD}), see Figure 10-4. **The maximum recommended impedance for analog sources is 10 kΩ.** As the source impedance is decreased, the acquisition time may be decreased. After the analog input channel is selected (or changed), an A/D acquisition must be done before the conversion can be started. To calculate the minimum acquisition time, Equation 10-1 may be used. This equation assumes that 1/2 LSb error is used (1024 steps for the ADC). The 1/2 LSb error is the maximum error allowed for the ADC to meet its specified resolution.

EQUATION 10-1: ACQUISITION TIME EXAMPLE

Assumptions: *Temperature = 50°C and external impedance of 10kΩ 5.0V V_{DD}*

$$T_{ACQ} = \text{Amplifier Settling Time} + \text{Hold Capacitor Charging Time} + \text{Temperature Coefficient}$$
$$= T_{AMP} + T_C + T_{COFF}$$
$$= 2\mu s + T_C + [(\text{Temperature} - 25°C)(0.05\mu s/°C)]$$

The value for T_C can be approximated with the following equations:

$$V_{APPLIED}\left(1 - \frac{1}{2047}\right) = V_{CHOLD} \quad ;[1]\ V_{CHOLD} \text{ charged to within 1/2 lsb}$$

$$V_{APPLIED}\left(1 - e^{\frac{-T_C}{RC}}\right) = V_{CHOLD} \quad ;[2]\ V_{CHOLD} \text{ charge response to } V_{APPLIED}$$

$$V_{APPLIED}\left(1 - e^{\frac{-T_C}{RC}}\right) = V_{APPLIED}\left(1 - \frac{1}{2047}\right) \quad ;\text{combining [1] and [2]}$$

Solving for T_C:

$$T_C = -C_{HOLD}(R_{IC} + R_{SS} + R_S)\ \ln(1/2047)$$
$$= -10pF(1k\Omega + 7k\Omega + 10k\Omega)\ \ln(0.0004885)$$
$$= 1.37\mu s$$

Therefore:

$$T_{ACQ} = 2\mu s + 1.37\mu s + [(50°C - 25°C)(0.05\mu s/°C)]$$
$$= 4.67\mu s$$

Note 1: The reference voltage (V_{REF}) has no effect on the equation, since it cancels itself out.

2: The charge holding capacitor (C_{HOLD}) is not discharged after each conversion.

3: The maximum recommended impedance for analog sources is 10 kΩ. This is required to meet the pin leakage specification.

© 2010 Microchip Technology Inc.

FIGURE 10-4: ANALOG INPUT MODEL

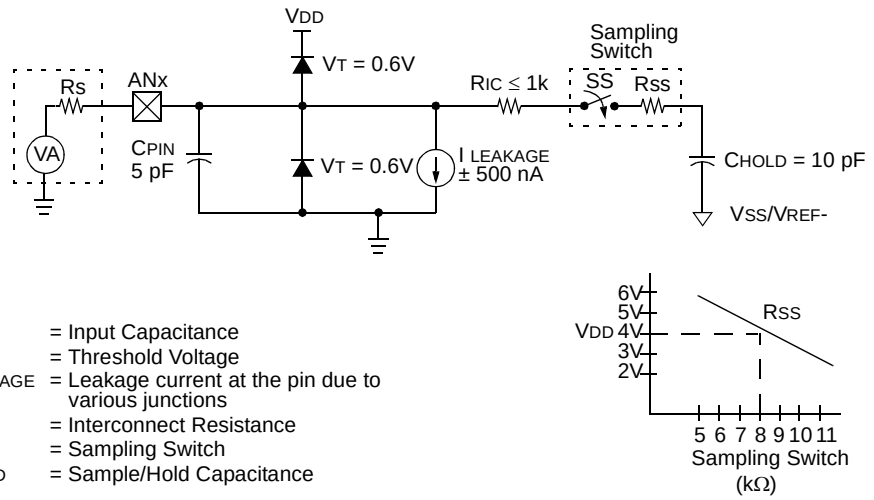

Legend: CPIN = Input Capacitance
VT = Threshold Voltage
I LEAKAGE = Leakage current at the pin due to various junctions
RIC = Interconnect Resistance
SS = Sampling Switch
CHOLD = Sample/Hold Capacitance

FIGURE 10-5: ADC TRANSFER FUNCTION

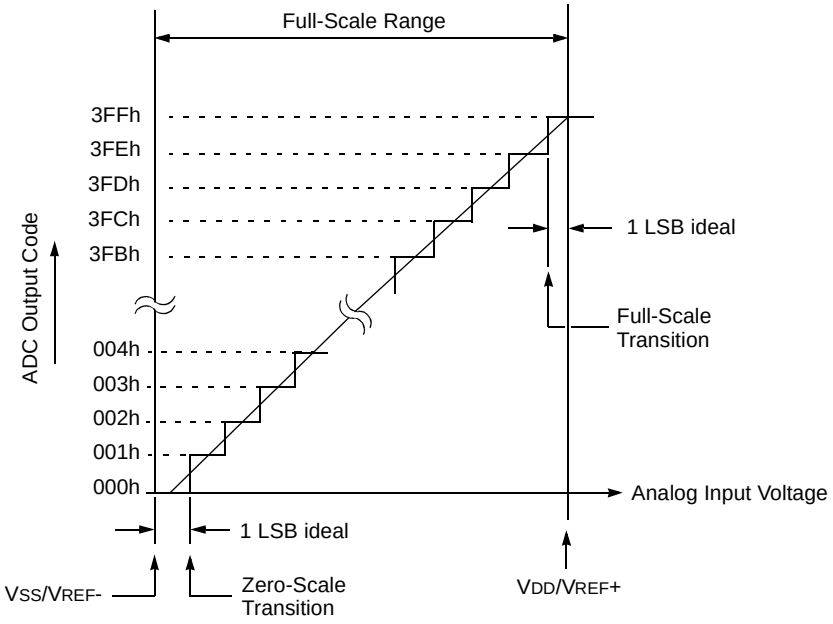

TABLE 10-2: SUMMARY OF ASSOCIATED ADC REGISTERS

Name	Bit 7	Bit 6	Bit 5	Bit 4	Bit 3	Bit 2	Bit 1	Bit 0	Value on POR, BOR	Value on all other Resets
ADCON0(1)	ADFM	VCFG	—	CHS2	CHS1	CHS0	GO/$\overline{\text{DONE}}$	ADON	00-0 0000	00-0 0000
ANSEL	—	ADCS2(1)	ADCS1(1)	ADCS0(1)	ANS3	ANS2(1)	ANS1	ANS0	-000 1111	-000 1111
ADRESH(1,2)	A/D Result Register High Byte								xxxx xxxx	uuuu uuuu
ADRESL(1,2)	A/D Result Register Low Byte								xxxx xxxx	uuuu uuuu
GPIO	—	—	GP5	GP4	GP3	GP2	GP1	GP0	--x0 x000	--x0 x000
INTCON	GIE	PEIE	T0IE	INTE	GPIE	T0IF	INTF	GPIF	0000 0000	0000 0000
PIE1	—	ADIE(1)	CCP1IE(1)	—	CMIE	—	TMR2IE(1)	TMR1IE	-00- 0-00	-00- 0-00
PIR1	—	ADIF(1)	CCP1IF(1)	—	CMIF	—	TMR2IF(1)	TMR1IF	-00- 0-00	-00- 0-00
TRISIO	—	—	TRISIO5	TRISIO4	TRISIO3	TRISIO2	TRISIO1	TRISIO0	--11 1111	--11 1111

Legend: x = unknown, u = unchanged, – = unimplemented read as '0'. Shaded cells are not used for ADC module.

Note 1: For PIC12F615/617/HV615 only.

2: Read Only Register.

© 2010 Microchip Technology Inc.

11.0 ENHANCED CAPTURE/ COMPARE/PWM (WITH AUTO-SHUTDOWN AND DEAD BAND) MODULE (PIC12F615/617/ HV615 ONLY)

The Enhanced Capture/Compare/PWM module is a peripheral which allows the user to time and control different events. In Capture mode, the peripheral allows the timing of the duration of an event.The Compare mode allows the user to trigger an external event when a predetermined amount of time has expired. The PWM mode can generate a Pulse-Width Modulated signal of varying frequency and duty cycle.

Table 11-1 shows the timer resources required by the ECCP module.

TABLE 11-1: ECCP MODE – TIMER RESOURCES REQUIRED

ECCP Mode	Timer Resource
Capture	Timer1
Compare	Timer1
PWM	Timer2

REGISTER 11-1: CCP1CON: ENHANCED CCP1 CONTROL REGISTER

R/W-0	U-0	R/W-0	R/W-0	R/W-0	R/W-0	R/W-0	R/W-0
P1M	—	DC1B1	DC1B0	CCP1M3	CCP1M2	CCP1M1	CCP1M0
bit 7							bit 0

Legend:			
R = Readable bit	W = Writable bit	U = Unimplemented bit, read as ‘0’	
-n = Value at POR	‘1’ = Bit is set	‘0’ = Bit is cleared	x = Bit is unknown

bit 7 **P1M:** PWM Output Configuration bits
If CCP1M<3:2> = 00, 01, 10:
x = P1A assigned as Capture/Compare input; P1B assigned as port pins
If CCP1M<3:2> = 11:
0 = Single output; P1A modulated; P1B assigned as port pins
1 = Half-Bridge output; P1A, P1B modulated with dead-band control

bit 6 **Unimplemented:** Read as ‘0’

bit 5-4 **DC1B<1:0>:** PWM Duty Cycle Least Significant bits
Capture mode:
Unused.
Compare mode:
Unused.
PWM mode:
These bits are the two LSbs of the PWM duty cycle. The eight MSbs are found in CCPR1L.

bit 3-0 **CCP1M<3:0>:** ECCP Mode Select bits
0000 =Capture/Compare/PWM off (resets ECCP module)
0001 =Unused (reserved)
0010 =Compare mode, toggle output on match (CCP1IF bit is set)
0011 =Unused (reserved)
0100 =Capture mode, every falling edge
0101 =Capture mode, every rising edge
0110 =Capture mode, every 4th rising edge
0111 =Capture mode, every 16th rising edge
1000 =Compare mode, set output on match (CCP1IF bit is set)
1001 =Compare mode, clear output on match (CCP1IF bit is set)
1010 =Compare mode, generate software interrupt on match (CCP1IF bit is set, CCP1 pin is unaffected)
1011 =Compare mode, trigger special event (CCP1IF bit is set; CCP1 resets TMR1 or TMR2 and starts an A/D conversion, if the ADC module is enabled)
1100 =PWM mode; P1A active-high; P1B active-high
1101 =PWM mode; P1A active-high; P1B active-low
1110 =PWM mode; P1A active-low; P1B active-high
1111 =PWM mode; P1A active-low; P1B active-low

11.1 Capture Mode

In Capture mode, CCPR1H:CCPR1L captures the 16-bit value of the TMR1 register when an event occurs on pin CCP1. An event is defined as one of the following and is configured by the CCP1M<3:0> bits of the CCP1CON register:

- Every falling edge
- Every rising edge
- Every 4th rising edge
- Every 16th rising edge

When a capture is made, the Interrupt Request Flag bit CCP1IF of the PIR1 register is set. The interrupt flag must be cleared in software. If another capture occurs before the value in the CCPR1H, CCPR1L register pair is read, the old captured value is overwritten by the new captured value (see Figure 11-1).

11.1.1 CCP1 PIN CONFIGURATION

In Capture mode, the CCP1 pin should be configured as an input by setting the associated TRIS control bit.

Note:	If the CCP1 pin is configured as an output, a write to the port can cause a capture condition.

FIGURE 11-1: CAPTURE MODE OPERATION BLOCK DIAGRAM

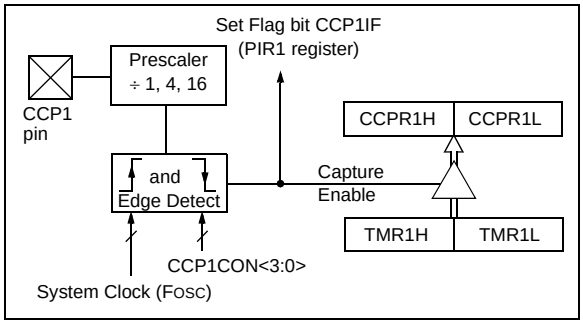

11.1.2 TIMER1 MODE SELECTION

Timer1 must be running in Timer mode or Synchronized Counter mode for the CCP module to use the capture feature. In Asynchronous Counter mode, the capture operation may not work.

11.1.3 SOFTWARE INTERRUPT

When the Capture mode is changed, a false capture interrupt may be generated. The user should keep the CCP1IE interrupt enable bit of the PIE1 register clear to avoid false interrupts. Additionally, the user should clear the CCP1IF interrupt flag bit of the PIR1 register following any change in operating mode.

11.1.4 CCP PRESCALER

There are four prescaler settings specified by the CCP1M<3:0> bits of the CCP1CON register. Whenever the CCP module is turned off, or the CCP module is not in Capture mode, the prescaler counter is cleared. Any Reset will clear the prescaler counter.

Switching from one capture prescaler to another does not clear the prescaler and may generate a false interrupt. To avoid this unexpected operation, turn the module off by clearing the CCP1CON register before changing the prescaler (see Example 11-1).

EXAMPLE 11-1: CHANGING BETWEEN CAPTURE PRESCALERS

```
BANKSEL CCP1CON     ;Set Bank bits to point
                    ;to CCP1CON
CLRF    CCP1CON     ;Turn CCP module off
MOVLW   NEW_CAPT_PS ;Load the W reg with
                    ; the new prescaler
                    ; move value and CCP ON
MOVWF   CCP1CON     ;Load CCP1CON with this
                    ; value
```


© 2010 Microchip Technology Inc.

TABLE 11-2: SUMMARY OF REGISTERS ASSOCIATED WITH CAPTURE

Name	Bit 7	Bit 6	Bit 5	Bit 4	Bit 3	Bit 2	Bit 1	Bit 0	Value on POR, BOR	Value on all other Resets
CCP1CON	P1M	—	DC1B1	DC1B0	CCP1M3	CCP1M2	CCP1M1	CCP1M0	0-00 0000	0-00 0000
CCPR1L	Capture/Compare/PWM Register 1 Low Byte								xxxx xxxx	uuuu uuuu
CCPR1H	Capture/Compare/PWM Register 1 High Byte								xxxx xxxx	uuuu uuuu
INTCON	GIE	PEIE	T0IE	INTE	GPIE	T0IF	INTF	GPIF	0000 0000	0000 0000
PIE1	—	ADIE(1)	CCP1IE(1)	—	CMIE	—	TMR2IE(1)	TMR1IE	-00- 0-00	-00- 0-00
PIR1	—	ADIF(1)	CCP1IF(1)	—	CMIF	—	TMR2IF(1)	TMR1IF	-00- 0-00	-00- 0-00
T1CON	T1GINV	TMR1GE	T1CKPS1	T1CKPS0	T1OSCEN	$\overline{\text{T1SYNC}}$	TMR1CS	TMR1ON	0000 0000	uuuu uuuu
TMR1L	Holding Register for the Least Significant Byte of the 16-bit TMR1 Register								xxxx xxxx	uuuu uuuu
TMR1H	Holding Register for the Most Significant Byte of the 16-bit TMR1 Register								xxxx xxxx	uuuu uuuu
TRISIO	—	—	TRISIO5	TRISIO4	TRISIO3	TRISIO2	TRISIO1	TRISIO0	--11 1111	--11 1111

Legend: - = Unimplemented locations, read as '0', u = unchanged, x = unknown. Shaded cells are not used by the Capture.

Note 1: For PIC12F615/617/HV615 only.

11.2 Compare Mode

In Compare mode, the 16-bit CCPR1 register value is constantly compared against the TMR1 register pair value. When a match occurs, the CCP1 module may:

- Toggle the CCP1 output.
- Set the CCP1 output.
- Clear the CCP1 output.
- Generate a Special Event Trigger.
- Generate a Software Interrupt.

The action on the pin is based on the value of the CCP1M<3:0> control bits of the CCP1CON register.

All Compare modes can generate an interrupt.

FIGURE 11-2: COMPARE MODE OPERATION BLOCK DIAGRAM

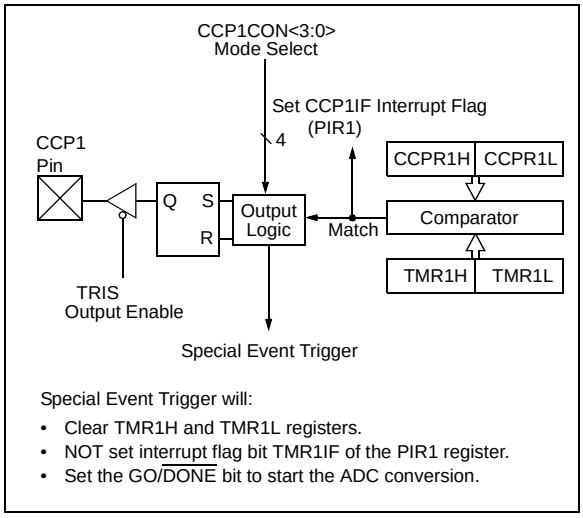

11.2.1 CCP1 PIN CONFIGURATION

The user must configure the CCP1 pin as an output by clearing the associated TRIS bit.

Note:	Clearing the CCP1CON register will force the CCP1 compare output latch to the default low level. This is not the PORT I/O data latch.

11.2.2 TIMER1 MODE SELECTION

In Compare mode, Timer1 must be running in either Timer mode or Synchronized Counter mode. The compare operation may not work in Asynchronous Counter mode.

11.2.3 SOFTWARE INTERRUPT MODE

When Generate Software Interrupt mode is chosen (CCP1M<3:0> = `1010`), the CCP1 module does not assert control of the CCP1 pin (see the CCP1CON register).

11.2.4 SPECIAL EVENT TRIGGER

When Special Event Trigger mode is chosen (CCP1M<3:0> = `1011`), the CCP1 module does the following:

- Resets Timer1
- Starts an ADC conversion if ADC is enabled

The CCP1 module does not assert control of the CCP1 pin in this mode (see the CCP1CON register).

The Special Event Trigger output of the CCP occurs immediately upon a match between the TMR1H, TMR1L register pair and the CCPR1H, CCPR1L register pair. The TMR1H, TMR1L register pair is not reset until the next rising edge of the Timer1 clock. This allows the CCPR1H, CCPR1L register pair to effectively provide a 16-bit programmable period register for Timer1.

Note 1:	The Special Event Trigger from the CCP module does not set interrupt flag bit TMRxIF of the PIR1 register.
2:	Removing the match condition by changing the contents of the CCPR1H and CCPR1L register pair, between the clock edge that generates the Special Event Trigger and the clock edge that generates the Timer1 Reset, will preclude the Reset from occurring.

© 2010 Microchip Technology Inc.

TABLE 11-3: SUMMARY OF REGISTERS ASSOCIATED WITH COMPARE

Name	Bit 7	Bit 6	Bit 5	Bit 4	Bit 3	Bit 2	Bit 1	Bit 0	Value on POR, BOR	Value on all other Resets
CCP1CON	P1M	—	DC1B1	DC1B0	CCP1M3	CCP1M2	CCP1M1	CCP1M0	0-00 0000	0-00 0000
CCPR1L	Capture/Compare/PWM Register 1 Low Byte								xxxx xxxx	uuuu uuuu
CCPR1H	Capture/Compare/PWM Register 1 High Byte								xxxx xxxx	uuuu uuuu
INTCON	GIE	PEIE	T0IE	INTE	GPIE	T0IF	INTF	GPIF	0000 0000	0000 0000
PIE1	—	ADIE(1)	CCP1IE(1)	—	CMIE	—	TMR2IE(1)	TMR1IE	-00- 0-00	-00- 0-00
PIR1	—	ADIF(1)	CCP1IF(1)	—	CMIF	—	TMR2IF(1)	TMR1IF	-00- 0-00	-00- 0-00
T1CON	T1GINV	TMR1GE	T1CKPS1	T1CKPS0	T1OSCEN	$\overline{\text{T1SYNC}}$	TMR1CS	TMR1ON	0000 0000	uuuu uuuu
TMR1L	Holding Register for the Least Significant Byte of the 16-bit TMR1 Register								xxxx xxxx	uuuu uuuu
TMR1H	Holding Register for the Most Significant Byte of the 16-bit TMR1 Register								xxxx xxxx	uuuu uuuu
TMR2	Timer2 Module Register								0000 0000	0000 0000
TRISIO	—	—	TRISIO5	TRISIO4	TRISIO3	TRISIO2	TRISIO1	TRISIO0	--11 1111	--11 1111

Legend: - = Unimplemented locations, read as '0', u = unchanged, x = unknown. Shaded cells are not used by the Compare.

Note 1: For PIC12F615/617/HV615 only.

11.3 PWM Mode

The PWM mode generates a Pulse-Width Modulated signal on the CCP1 pin. The duty cycle, period and resolution are determined by the following registers:

- PR2
- T2CON
- CCPR1L
- CCP1CON

In Pulse-Width Modulation (PWM) mode, the CCP module produces up to a 10-bit resolution PWM output on the CCP1 pin. Since the CCP1 pin is multiplexed with the PORT data latch, the TRIS for that pin must be cleared to enable the CCP1 pin output driver.

Note:	Clearing the CCP1CON register will relinquish CCP1 control of the CCP1 pin.

Figure 11-3 shows a simplified block diagram of PWM operation.

Figure 11-4 shows a typical waveform of the PWM signal.

For a step-by-step procedure on how to set up the CCP module for PWM operation, see **Section 11.3.7 "Setup for PWM Operation"**.

FIGURE 11-3: SIMPLIFIED PWM BLOCK DIAGRAM

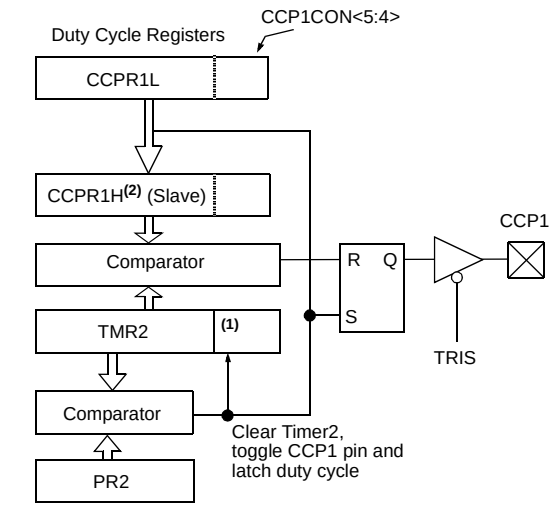

Note 1: The 8-bit timer TMR2 register is concatenated with the 2-bit internal system clock (FOSC), or 2 bits of the prescaler, to create the 10-bit time base.

2: In PWM mode, CCPR1H is a read-only register.

The PWM output (Figure 11-4) has a time base (period) and a time that the output stays high (duty cycle).

FIGURE 11-4: CCP PWM OUTPUT

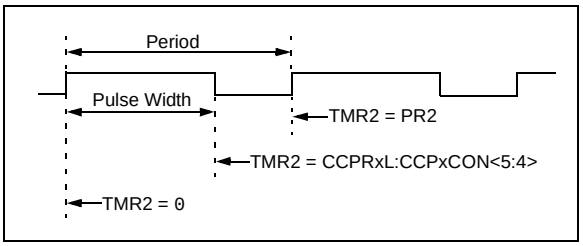

© 2010 Microchip Technology Inc.

11.3.1 PWM PERIOD

The PWM period is specified by the PR2 register of Timer2. The PWM period can be calculated using the formula of Equation 11-1.

EQUATION 11-1: PWM PERIOD

$$PWM\ Period = [(PR2) + 1] \bullet 4 \bullet T_{OSC} \bullet (TMR2\ Prescale\ Value)$$

When TMR2 is equal to PR2, the following three events occur on the next increment cycle:

- TMR2 is cleared
- The CCP1 pin is set. (Exception: If the PWM duty cycle = 0%, the pin will not be set.)
- The PWM duty cycle is latched from CCPR1L into CCPR1H.

Note:	The Timer2 postscaler (see **Section 8.1 "Timer2 Operation"**) is not used in the determination of the PWM frequency.

11.3.2 PWM DUTY CYCLE

The PWM duty cycle is specified by writing a 10-bit value to multiple registers: CCPR1L register and DC1B<1:0> bits of the CCP1CON register. The CCPR1L contains the eight MSbs and the DC1B<1:0> bits of the CCP1CON register contain the two LSbs. CCPR1L and DC1B<1:0> bits of the CCP1CON register can be written to at any time. The duty cycle value is not latched into CCPR1H until after the period completes (i.e., a match between PR2 and TMR2 registers occurs). While using the PWM, the CCPR1H register is read-only.

Equation 11-2 is used to calculate the PWM pulse width.

Equation 11-3 is used to calculate the PWM duty cycle ratio.

EQUATION 11-2: PULSE WIDTH

$$Pulse\ Width = (CCPR1L{:}CCP1CON\langle 5{:}4\rangle) \bullet T_{OSC} \bullet (TMR2\ Prescale\ Value)$$

EQUATION 11-3: DUTY CYCLE RATIO

$$Duty\ Cycle\ Ratio = \frac{(CCPR1L{:}CCP1CON\langle 5{:}4\rangle)}{4(PR2 + 1)}$$

The CCPR1H register and a 2-bit internal latch are used to double buffer the PWM duty cycle. This double buffering is essential for glitchless PWM operation.

The 8-bit timer TMR2 register is concatenated with either the 2-bit internal system clock (FOSC), or 2 bits of the prescaler, to create the 10-bit time base. The system clock is used if the Timer2 prescaler is set to 1:1.

When the 10-bit time base matches the CCPR1H and 2-bit latch, then the CCP1 pin is cleared (see Figure 11-3).

11.3.3 PWM RESOLUTION

The resolution determines the number of available duty cycles for a given period. For example, a 10-bit resolution will result in 1024 discrete duty cycles, whereas an 8-bit resolution will result in 256 discrete duty cycles.

The maximum PWM resolution is 10 bits when PR2 is 255. The resolution is a function of the PR2 register value as shown by Equation 11-4.

EQUATION 11-4: PWM RESOLUTION

$$Resolution = \frac{\log[4(PR2 + 1)]}{\log(2)}\ bits$$

Note:	If the pulse width value is greater than the period the assigned PWM pin(s) will remain unchanged.

TABLE 11-4: EXAMPLE PWM FREQUENCIES AND RESOLUTIONS (FOSC = 20 MHz)

PWM Frequency	1.22 kHz	4.88 kHz	19.53 kHz	78.12 kHz	156.3 kHz	208.3 kHz
Timer Prescale (1, 4, 16)	16	4	1	1	1	1
PR2 Value	0xFF	0xFF	0xFF	0x3F	0x1F	0x17
Maximum Resolution (bits)	10	10	10	8	7	6.6

TABLE 11-5: EXAMPLE PWM FREQUENCIES AND RESOLUTIONS (FOSC = 8 MHz)

PWM Frequency	1.22 kHz	4.90 kHz	19.61 kHz	76.92 kHz	153.85 kHz	200.0 kHz
Timer Prescale (1, 4, 16)	16	4	1	1	1	1
PR2 Value	0x65	0x65	0x65	0x19	0x0C	0x09
Maximum Resolution (bits)	8	8	8	6	5	5

11.3.4 OPERATION IN SLEEP MODE

In Sleep mode, the TMR2 register will not increment and the state of the module will not change. If the CCP1 pin is driving a value, it will continue to drive that value. When the device wakes up, TMR2 will continue from its previous state.

11.3.5 CHANGES IN SYSTEM CLOCK FREQUENCY

The PWM frequency is derived from the system clock frequency. Any changes in the system clock frequency will result in changes to the PWM frequency. See **Section 4.0 "Oscillator Module"** for additional details.

11.3.6 EFFECTS OF RESET

Any Reset will force all ports to Input mode and the CCP registers to their Reset states.

11.3.7 SETUP FOR PWM OPERATION

The following steps should be taken when configuring the CCP module for PWM operation:

1. Disable the PWM pin (CCP1) output drivers by setting the associated TRIS bit.
2. Set the PWM period by loading the PR2 register.
3. Configure the CCP module for the PWM mode by loading the CCP1CON register with the appropriate values.
4. Set the PWM duty cycle by loading the CCPR1L register and DC1B bits of the CCP1CON register.
5. Configure and start Timer2:
   - Clear the TMR2IF interrupt flag bit of the PIR1 register.
   - Set the Timer2 prescale value by loading the T2CKPS bits of the T2CON register.
   - Enable Timer2 by setting the TMR2ON bit of the T2CON register.
6. Enable PWM output after a new PWM cycle has started:
   - Wait until Timer2 overflows (TMR2IF bit of the PIR1 register is set).
   - Enable the CCP1 pin output driver by clearing the associated TRIS bit.

© 2010 Microchip Technology Inc.

11.4 PWM (Enhanced Mode)

The Enhanced PWM Mode can generate a PWM signal on up to four different output pins with up to 10-bits of resolution. It can do this through four different PWM output modes:

- Single PWM
- Half-Bridge PWM

To select an Enhanced PWM mode, the P1M bits of the CCP1CON register must be set appropriately.

The PWM outputs are multiplexed with I/O pins and are designated P1A and P1B. The polarity of the PWM pins is configurable and is selected by setting the CCP1M bits in the CCP1CON register appropriately.

Table 11-6 shows the pin assignments for each Enhanced PWM mode.

Figure 11-5 shows an example of a simplified block diagram of the Enhanced PWM module.

Note: To prevent the generation of an incomplete waveform when the PWM is first enabled, the ECCP module waits until the start of a new PWM period before generating a PWM signal.

FIGURE 11-5: EXAMPLE SIMPLIFIED BLOCK DIAGRAM OF THE ENHANCED PWM MODE

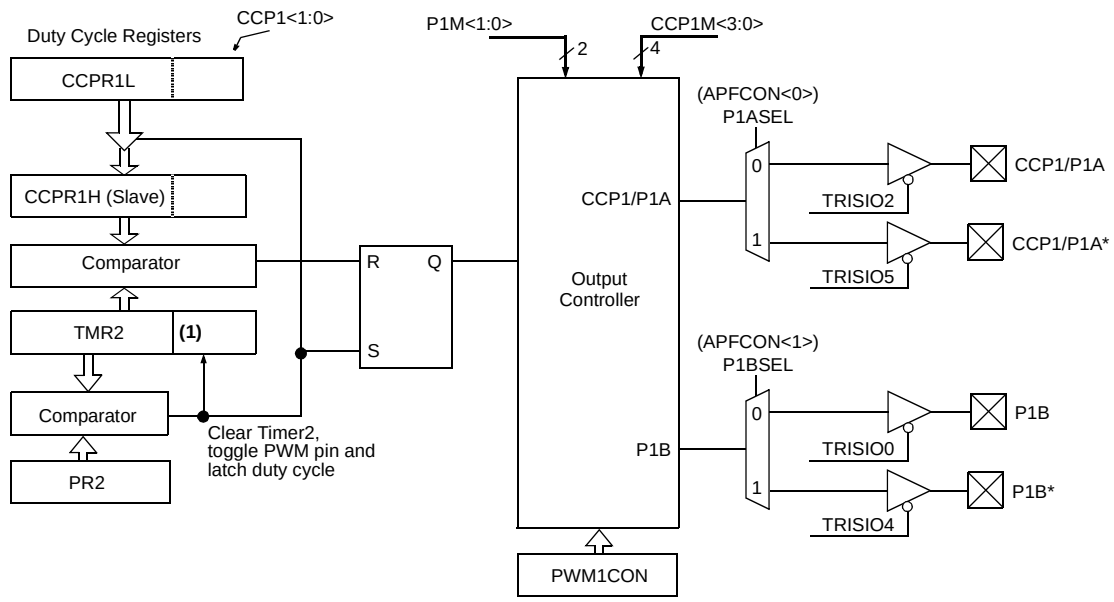

* Alternate pin function.

Note 1: The 8-bit timer TMR2 register is concatenated with the 2-bit internal Q clock, or 2 bits of the prescaler to create the 10-bit time base.

Note 1: The TRIS register value for each PWM output must be configured appropriately.

2: Clearing the CCP1CON register will relinquish ECCP control of all PWM output pins.

3: Any pin not used by an Enhanced PWM mode is available for alternate pin functions.

TABLE 11-6: EXAMPLE PIN ASSIGNMENTS FOR VARIOUS PWM ENHANCED MODES

ECCP Mode	P1M<1:0>	CCP1/P1A	P1B
Single	00	Yes(1)	Yes(1)
Half-Bridge	10	Yes	Yes

FIGURE 11-6: EXAMPLE PWM (ENHANCED MODE) OUTPUT RELATIONSHIPS (ACTIVE-HIGH STATE)

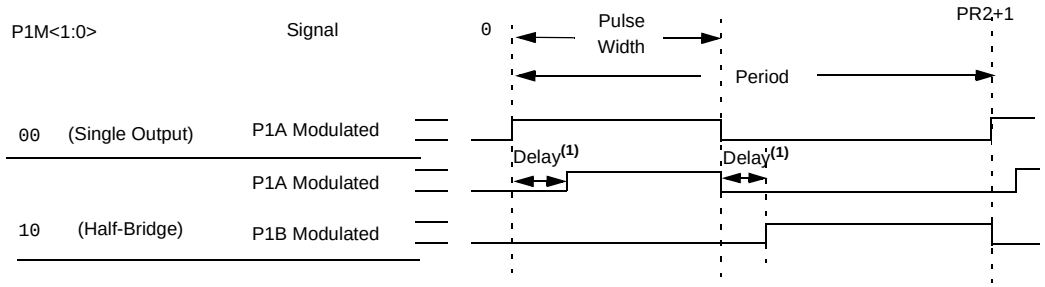

Relationships:

- Period = 4 * Tosc * (PR2 + 1) * (TMR2 Prescale Value)
- Pulse Width = Tosc * (CCPR1L<7:0>:CCP1CON<5:4>) * (TMR2 Prescale Value)
- Delay = 4 * Tosc * (PWM1CON<6:0>)

Note 1: Dead-band delay is programmed using the PWM1CON register (**Section 11.4.6 "Programmable Dead-Band Delay mode"**).

FIGURE 11-7: EXAMPLE ENHANCED PWM OUTPUT RELATIONSHIPS (ACTIVE-LOW STATE)

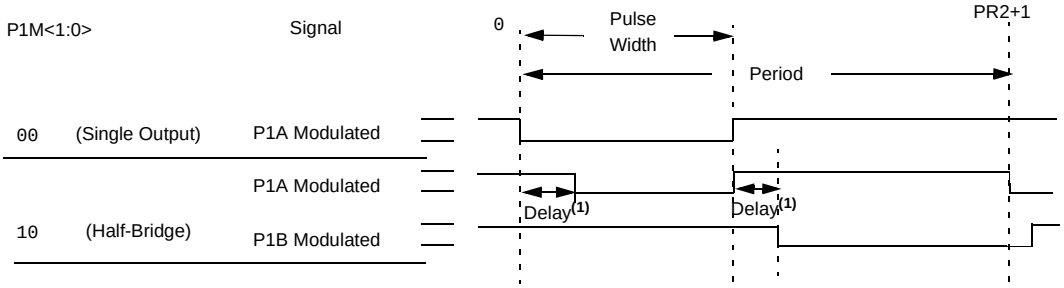

Relationships:

- Period = 4 * Tosc * (PR2 + 1) * (TMR2 Prescale Value)
- Pulse Width = Tosc * (CCPR1L<7:0>:CCP1CON<5:4>) * (TMR2 Prescale Value)
- Delay = 4 * Tosc * (PWM1CON<6:0>)

Note 1: Dead-band delay is programmed using the PWM1CON register (**Section 11.4.6 "Programmable Dead-Band Delay mode"**).

© 2010 Microchip Technology Inc.

11.4.1 HALF-BRIDGE MODE

In Half-Bridge mode, two pins are used as outputs to drive push-pull loads. The PWM output signal is output on the CCP1/P1A pin, while the complementary PWM output signal is output on the P1B pin (see Figure 11-8). This mode can be used for Half-Bridge applications, as shown in Figure 11-9, or for Full-Bridge applications, where four power switches are being modulated with two PWM signals.

In Half-Bridge mode, the programmable dead-band delay can be used to prevent shoot-through current in Half-Bridge power devices. The value of the PDC<6:0> bits of the PWM1CON register sets the number of instruction cycles before the output is driven active. If the value is greater than the duty cycle, the corresponding output remains inactive during the entire cycle. See **Section 11.4.6 "Programmable Dead-Band Delay mode"** for more details of the dead-band delay operations.

Since the P1A and P1B outputs are multiplexed with the PORT data latches, the associated TRIS bits must be cleared to configure P1A and P1B as outputs.

FIGURE 11-8: EXAMPLE OF HALF-BRIDGE PWM OUTPUT

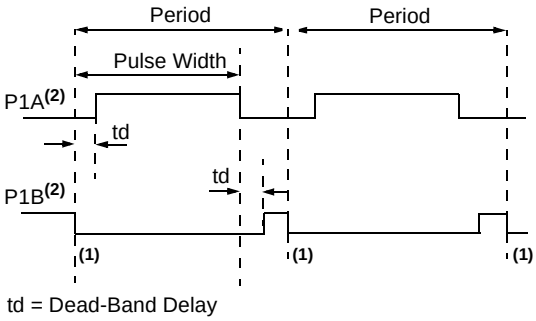

Note 1: At this time, the TMR2 register is equal to the PR2 register.

2: Output signals are shown as active-high.

FIGURE 11-9: EXAMPLE OF HALF-BRIDGE APPLICATIONS

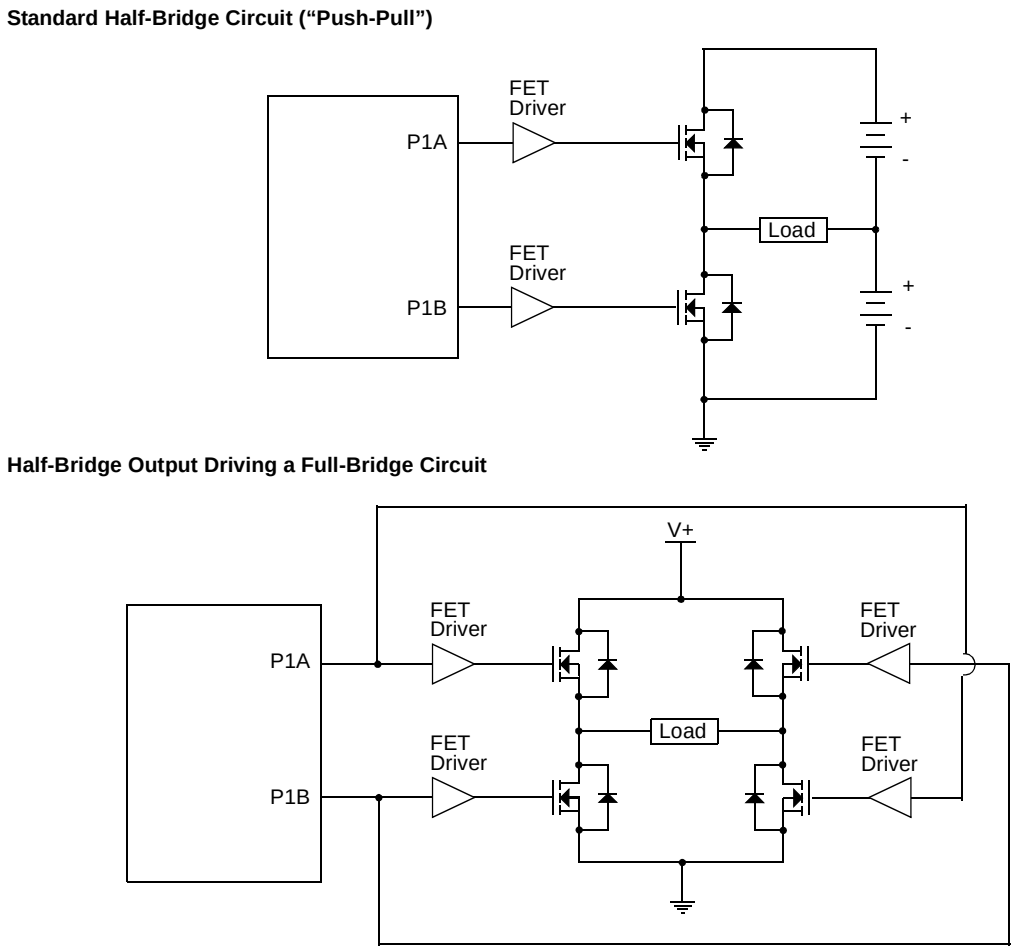

11.4.2 START-UP CONSIDERATIONS

When any PWM mode is used, the application hardware must use the proper external pull-up and/or pull-down resistors on the PWM output pins.

Note:	When the microcontroller is released from Reset, all of the I/O pins are in the high-impedance state. The external circuits must keep the power switch devices in the OFF state until the microcontroller drives the I/O pins with the proper signal levels or activates the PWM output(s).

The CCP1M<1:0> bits of the CCP1CON register allow the user to choose whether the PWM output signals are active-high or active-low for each PWM output pin (P1A and P1B). The PWM output polarities must be selected before the PWM pin output drivers are enabled. Changing the polarity configuration while the PWM pin output drivers are enable is not recommended since it may result in damage to the application circuits.

The P1A and P1B output latches may not be in the proper states when the PWM module is initialized. Enabling the PWM pin output drivers at the same time as the Enhanced PWM modes may cause damage to the application circuit. The Enhanced PWM modes must be enabled in the proper Output mode and complete a full PWM cycle before configuring the PWM pin output drivers. The completion of a full PWM cycle is indicated by the TMR2IF bit of the PIR1 register being set as the second PWM period begins.

11.4.3 OPERATION DURING SLEEP

When the device is placed in sleep, the allocated timer will not increment and the state of the module will not change. If the CCP1 pin is driving a value, it will continue to drive that value. When the device wakes up, it will continue from this state.

© 2010 Microchip Technology Inc.

11.4.4 ENHANCED PWM AUTO-SHUTDOWN MODE

The PWM mode supports an Auto-Shutdown mode that will disable the PWM outputs when an external shutdown event occurs. Auto-Shutdown mode places the PWM output pins into a predetermined state. This mode is used to help prevent the PWM from damaging the application.

The auto-shutdown sources are selected using the ECCPASx bits of the ECCPAS register. A shutdown event may be generated by:

- A logic ‘0’ on the INT pin
- Comparator
- Setting the ECCPASE bit in firmware

A shutdown condition is indicated by the ECCPASE (Auto-Shutdown Event Status) bit of the ECCPAS register. If the bit is a ‘0’, the PWM pins are operating normally. If the bit is a ‘1’, the PWM outputs are in the shutdown state. Refer to Figure 1.

When a shutdown event occurs, two things happen:

The ECCPASE bit is set to ‘1’. The ECCPASE will remain set until cleared in firmware or an auto-restart occurs (see **Section 11.4.5 “Auto-Restart Mode”**).

The enabled PWM pins are asynchronously placed in their shutdown states. The state of P1A is determined by the PSSAC bit. The state of P1B is determined by the PSSBD bit. The PSSAC and PSSBD bits are located in the ECCPAS register. Each pin may be placed into one of three states:

- Drive logic ‘1’
- Drive logic ‘0’
- Tri-state (high-impedance)

FIGURE 11-10: AUTO-SHUTDOWN BLOCK DIAGRAM

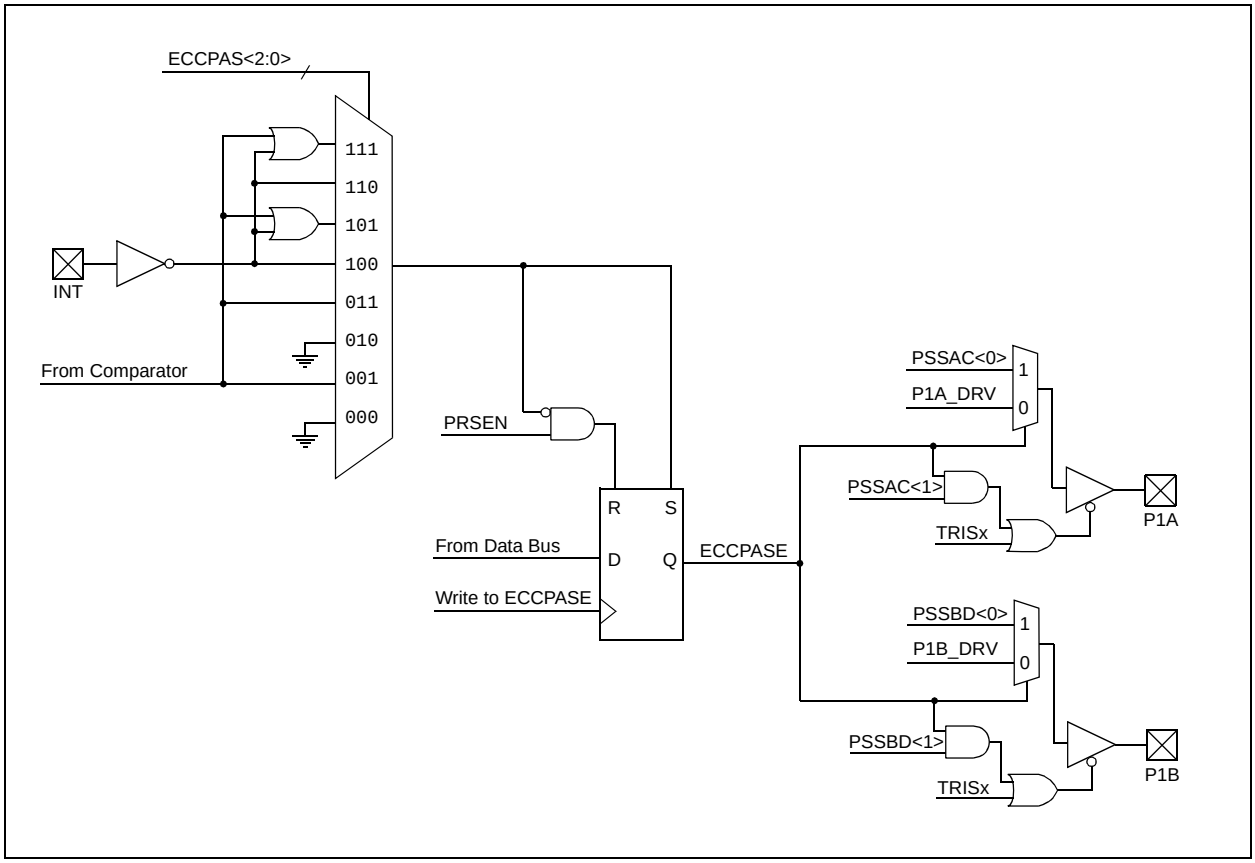

REGISTER 11-2: ECCPAS: ENHANCED CAPTURE/COMPARE/PWM AUTO-SHUTDOWN CONTROL REGISTER

R/W-0	R/W-0	R/W-0	R/W-0	R/W-0	R/W-0	R/W-0	R/W-0
ECCPASE	ECCPAS2	ECCPAS1	ECCPAS0	PSSAC1	PSSAC0	PSSBD1	PSSBD0
bit 7							bit 0

Legend:			
R = Readable bit	W = Writable bit	U = Unimplemented bit, read as ‘0’	
-n = Value at POR	‘1’ = Bit is set	‘0’ = Bit is cleared	x = Bit is unknown

bit 7 **ECCPASE:** ECCP Auto-Shutdown Event Status bit
1 = A shutdown event has occurred; ECCP outputs are in shutdown state
0 = ECCP outputs are operating

bit 6-4 **ECCPAS<2:0>:** ECCP Auto-shutdown Source Select bits
000 =Auto-Shutdown is disabled
001 =Comparator output change
010 =Auto-Shutdown is disabled
011 =Comparator output change(1)
100 =V_{IL} on INT pin
101 =V_{IL} on INT pin or Comparator change
110 =V_{IL} on INT pin(1)
111 =V_{IL} on INT pin or Comparator change

bit 3-2 **PSSAC<1:0>:** Pin P1A Shutdown State Control bits
00 = Drive pin P1A to ‘0’
01 = Drive pin P1A to ‘1’
1x = Pin P1A tri-state

bit 1-0 **PSSBD<1:0>:** Pin P1B Shutdown State Control bits
00 = Drive pin P1B to ‘0’
01 = Drive pin P1B to ‘1’
1x = Pin P1B tri-state

Note 1: If CMSYNC is enabled, the shutdown will be delayed by Timer1.

Note 1: The auto-shutdown condition is a level-based signal, not an edge-based signal. As long as the level is present, the auto-shutdown will persist.

2: Writing to the ECCPASE bit is disabled while an auto-shutdown condition persists.

3: Once the auto-shutdown condition has been removed and the PWM restarted (either through firmware or auto-restart) the PWM signal will always restart at the beginning of the next PWM period.

© 2010 Microchip Technology Inc.

FIGURE 11-11: PWM AUTO-SHUTDOWN WITH FIRMWARE RESTART (PRSEN = 0)

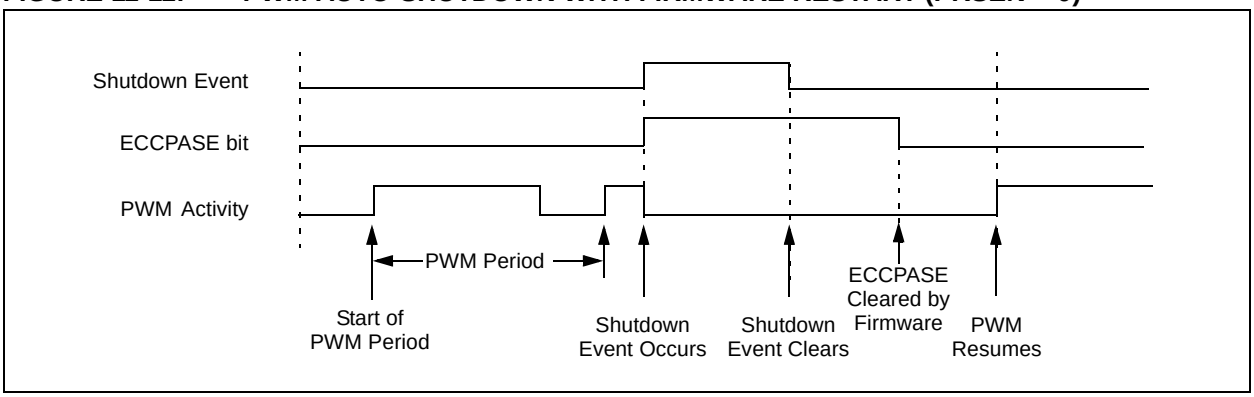

11.4.5 AUTO-RESTART MODE

The Enhanced PWM can be configured to automatically restart the PWM signal once the auto-shutdown condition has been removed. Auto-restart is enabled by setting the PRSEN bit in the PWM1CON register.

If auto-restart is enabled, the ECCPASE bit will remain set as long as the auto-shutdown condition is active. When the auto-shutdown condition is removed, the ECCPASE bit will be cleared via hardware and normal operation will resume.

FIGURE 11-12: PWM AUTO-SHUTDOWN WITH AUTO-RESTART ENABLED (PRSEN = 1)

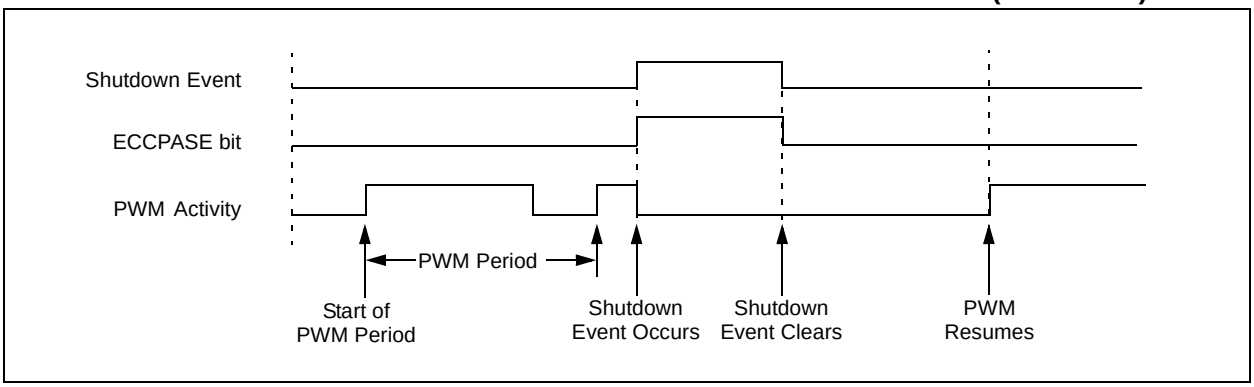

11.4.6 PROGRAMMABLE DEAD-BAND DELAY MODE

In Half-Bridge applications where all power switches are modulated at the PWM frequency, the power switches normally require more time to turn off than to turn on. If both the upper and lower power switches are switched at the same time (one turned on, and the other turned off), both switches may be on for a short period of time until one switch completely turns off. During this brief interval, a very high current (*shoot-through current*) will flow through both power switches, shorting the bridge supply. To avoid this potentially destructive shoot-through current from flowing during switching, turning on either of the power switches is normally delayed to allow the other switch to completely turn off.

In Half-Bridge mode, a digitally programmable dead-band delay is available to avoid shoot-through current from destroying the bridge power switches. The delay occurs at the signal transition from the non-active state to the active state. See Figure 11-13 for illustration. The lower seven bits of the associated PWMxCON register (Register 11-3) sets the delay period in terms of microcontroller instruction cycles (TCY or 4 TOSC).

FIGURE 11-13: EXAMPLE OF HALF-BRIDGE PWM OUTPUT

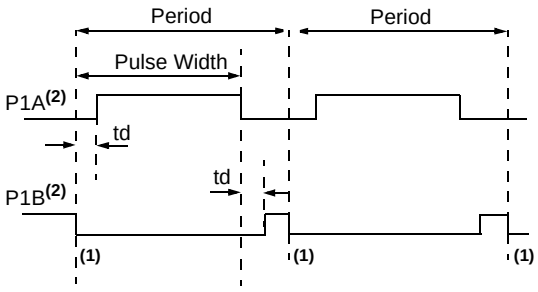

td = Dead-Band Delay

Note 1: At this time, the TMR2 register is equal to the PR2 register.

2: Output signals are shown as active-high.

FIGURE 11-14: EXAMPLE OF HALF-BRIDGE APPLICATIONS

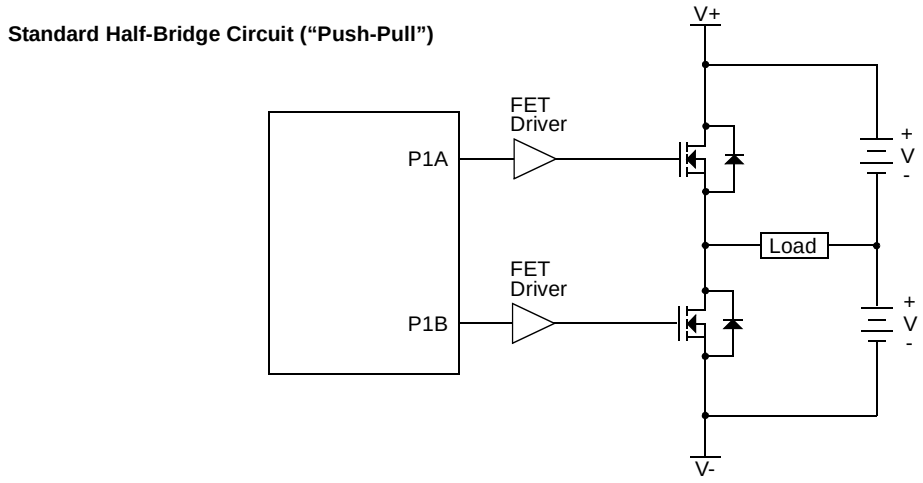

© 2010 Microchip Technology Inc.

REGISTER 11-3: PWM1CON: ENHANCED PWM CONTROL REGISTER

R/W-0	R/W-0	R/W-0	R/W-0	R/W-0	R/W-0	R/W-0	R/W-0
PRSEN	PDC6	PDC5	PDC4	PDC3	PDC2	PDC1	PDC0
bit 7							bit 0

Legend:			
R = Readable bit	W = Writable bit	U = Unimplemented bit, read as ‘0’	
-n = Value at POR	‘1’ = Bit is set	‘0’ = Bit is cleared	x = Bit is unknown

bit 7 **PRSEN:** PWM Restart Enable bit

1 = Upon auto-shutdown, the ECCPASE bit clears automatically once the shutdown event goes away; the PWM restarts automatically

0 = Upon auto-shutdown, ECCPASE must be cleared in software to restart the PWM

bit 6-0 **PDC<6:0>:** PWM Delay Count bits

PDCn =Number of FOSC/4 (4 * TOSC) cycles between the scheduled time when a PWM signal **should** transition active and the **actual** time it transitions active

TABLE 11-7: SUMMARY OF REGISTERS ASSOCIATED WITH PWM

Name	Bit 7	Bit 6	Bit 5	Bit 4	Bit 3	Bit 2	Bit 1	Bit 0	Value on POR, BOR	Value on all other Resets
APFCON	—	—	—	T1GSEL	—	—	P1BSEL	P1ASEL	---0 --00	---0 --00
CCP1CON(1)	P1M	—	DC1B1	DC1B0	CCP1M3	CCP1M2	CCP1M1	CCP1M0	0-00 0000	0-00 0000
CCPR1L(1)	Capture/Compare/PWM Register 1 Low Byte								xxxx xxxx	uuuu uuuu
CCPR1H(1)	Capture/Compare/PWM Register 1 High Byte								xxxx xxxx	uuuu uuuu
CMCON0	CMON	COUT	CMOE	CMPOL	—	CMR	—	CMCH	0000 -0-0	0000 -0-0
CMCON1	—	—	—	T1ACS	CMHYS	—	T1GSS	CMSYNC	---0 0-10	---0 0-10
ECCPAS(1)	ECCPASE	ECCPAS2	ECCPAS1	ECCPAS0	PSSAC1	PSSAC0	PSSBD1	PSSBD0	0000 0000	0000 0000
PWM1CON	PRSEN	PDC6	PDC5	PDC4	PDC3	PDC2	PDC1	PDC0	0000 0000	0000 0000
INTCON	GIE	PEIE	T0IE	INTE	GPIE	T0IF	INTF	GPIF	0000 0000	0000 0000
PIE1	—	ADIE(1)	CCP1IE(1)	—	CMIE	—	TMR2IE(1)	TMR1IE	-00- 0-00	-00- 0-00
PIR1	—	ADIF(1)	CCP1IF(1)	—	CMIF	—	TMR2IF(1)	TMR1IF	-00- 0-00	-00- 0-00
T2CON(1)	—	TOUTPS3	TOUTPS2	TOUTPS1	TOUTPS0	TMR2ON	T2CKPS1	T2CKPS0	-000 0000	-000 0000
TMR2(1)	Timer2 Module Register								0000 0000	0000 0000
TRISIO	—	—	TRISIO5	TRISIO4	TRISIO3	TRISIO2	TRISIO1	TRISIO0	--11 1111	--11 1111

Legend: - = Unimplemented locations, read as ‘0’, u = unchanged, x = unknown. Shaded cells are not used by the PWM.

Note 1: For PIC12F615/617/HV615 only.

NOTES:

© 2010 Microchip Technology Inc.

12.0 SPECIAL FEATURES OF THE CPU

The PIC12F609/615/617/12HV609/615 has a host of features intended to maximize system reliability, minimize cost through elimination of external components, provide power-saving features and offer code protection.

These features are:

- Reset
  - Power-on Reset (POR)
  - Power-up Timer (PWRT)
  - Oscillator Start-up Timer (OST)
  - Brown-out Reset (BOR)
- Interrupts
- Watchdog Timer (WDT)
- Oscillator selection
- Sleep
- Code protection
- ID Locations
- In-Circuit Serial Programming

The PIC12F609/615/617/12HV609/615 has two timers that offer necessary delays on power-up. One is the Oscillator Start-up Timer (OST), intended to keep the chip in Reset until the crystal oscillator is stable. The other is the Power-up Timer (PWRT), which provides a fixed delay of 64 ms (nominal) on power-up only, designed to keep the part in Reset while the power supply stabilizes. There is also circuitry to reset the device if a brown-out occurs, which can use the Power-up Timer to provide at least a 64 ms Reset. With these three functions-on-chip, most applications need no external Reset circuitry.

The Sleep mode is designed to offer a very low-current Power-Down mode. The user can wake-up from Sleep through:

- External Reset
- Watchdog Timer Wake-up
- An interrupt

Several oscillator options are also made available to allow the part to fit the application. The INTOSC option saves system cost while the LP crystal option saves power. A set of Configuration bits are used to select various options (see Register 12-1).

12.1 Configuration Bits

The Configuration bits can be programmed (read as '0'), or left unprogrammed (read as '1') to select various device configurations as shown in Register 12-1. These bits are mapped in program memory location 2007h.

Note:	Address 2007h is beyond the user program memory space. It belongs to the special configuration memory space (2000h-3FFFh), which can be accessed only during programming. See *Memory Programming Specification* (DS41204) for more information.

REGISTER 12-1: CONFIG: CONFIGURATION WORD REGISTER (ADDRESS: 2007h) FOR PIC12F609/615/HV609/615 ONLY

U-1	U-1	U-1	U-1	R/P-1	R/P-1	R/P-1	R/P-1	R/P-1	R/P-1	R/P-1	R/P-1	R/P-1	R/P-1
—	—	—	—	BOREN1(1)	BOREN0(1)	IOSCFS	$\overline{CP}$(2)	MCLRE(3)	$\overline{PWRTE}$	WDTE	FOSC2	FOSC1	FOSC0
bit 13													bit 0

Legend:			
R = Readable bit	W = Writable bit	P = Programmable	U = Unimplemented bit, read as ‘0’
-n = Value at POR	‘1’ = Bit is set	‘0’ = Bit is cleared	x = Bit is unknown

bit 13-10 **Unimplemented**: Read as ‘1’

bit 9-8 **BOREN<1:0>:** Brown-out Reset Selection bits(1)
11 = BOR enabled
10 = BOR enabled during operation and disabled in Sleep
0x = BOR disabled

bit 7 **IOSCFS:** Internal Oscillator Frequency Select bit
1 = 8 MHz
0 = 4 MHz

bit 6 **$\overline{CP}$:** Code Protection bit(2)
1 = Program memory code protection is disabled
0 = Program memory code protection is enabled

bit 5 **MCLRE:** $\overline{MCLR}$ Pin Function Select bit(3)
1 = $\overline{MCLR}$ pin function is $\overline{MCLR}$
0 = $\overline{MCLR}$ pin function is digital input, $\overline{MCLR}$ internally tied to V_{DD}

bit 4 **$\overline{PWRTE}$:** Power-up Timer Enable bit
1 = PWRT disabled
0 = PWRT enabled

bit 3 **WDTE:** Watchdog Timer Enable bit
1 = WDT enabled
0 = WDT disabled

bit 2-0 **FOSC<2:0>:** Oscillator Selection bits
111 =RC oscillator: CLKOUT function on GP4/OSC2/CLKOUT pin, RC on GP5/OSC1/CLKIN
110 =RCIO oscillator: I/O function on GP4/OSC2/CLKOUT pin, RC on GP5/OSC1/CLKIN
101 =INTOSC oscillator: CLKOUT function on GP4/OSC2/CLKOUT pin, I/O function on GP5/OSC1/CLKIN
100 = INTOSCIO oscillator: I/O function on GP4/OSC2/CLKOUT pin, I/O function on GP5/OSC1/CLKIN
011 =EC: I/O function on GP4/OSC2/CLKOUT pin, CLKIN on GP5/OSC1/CLKIN
010 =HS oscillator: High-speed crystal/resonator on GP4/OSC2/CLKOUT and GP5/OSC1/CLKIN
001 = XT oscillator: Crystal/resonator on GP4/OSC2/CLKOUT and GP5/OSC1/CLKIN
000 = LP oscillator: Low-power crystal on GP4/OSC2/CLKOUT and GP5/OSC1/CLKIN

Note 1: Enabling Brown-out Reset does not automatically enable Power-up Timer.
2: The entire program memory will be erased when the code protection is turned off.
3: When $\overline{MCLR}$ is asserted in INTOSC or RC mode, the internal clock oscillator is disabled.

© 2010 Microchip Technology Inc.

REGISTER 12-2: CONFIG – CONFIGURATION WORD (ADDRESS: 2007h) FOR PIC12F617 ONLY

U-1	U-1	R/P-1	R/P-1	R/P-1	R/P-1	R/P-1	R/P-1	R/P-1	R/P-1	R/P-1	R/P-1	R/P-1	R/P-1
—	—	WRT1	WRT0	BOREN1	BOREN0	IOSCFS	$\overline{CP}$	MCLRE	$\overline{PWRTE}$	WDTE	FOSC2	F0SC1	F0SC0
bit 13													bit 0

bit 13-12 **Unimplemented:** Read as ‘1’

bit 11-10 **WRT<1:0>:** Flash Program Memory Self Write Enable bits
11 = Write protection off
10 = 000h to 1FFh write protected, 200h to 7FFh may be modified by PMCON1 control
01 = 000h to 3FFh write protected, 400h to 7FFh may be modified by PMCON1 control
00 = 000h to 7FFh write protected, entire program memory is write protected.

bit 9-8 **BOREN<1:0>:** Brown-out Reset Enable bits
11 = BOR enabled
10 = BOR disabled during Sleep and enabled during operation
0X = BOR disabled

bit 7 **IOSCFS:** Internal Oscillator Frequency Select
1 = 8 MHz
0 = 4 MHz

bit 6 **$\overline{CP}$:** Code Protection
1 = Program memory is not code protected
0 = Program memory is external read and write protected

bit 5 **MCLRE:** $\overline{MCLR}$ Pin Function Select
1 = $\overline{MCLR}$ pin is $\overline{MCLR}$ function and weak internal pull-up is enabled
0 = $\overline{MCLR}$ pin is alternate function, $\overline{MCLR}$ function is internally disabled

bit 4 **$\overline{PWRTE}$:** Power-up Timer Enable bit(1)
1 = PWRT disabled
0 = PWRT enabled

bit 3 **WDTE:** Watchdog Timer Enable bit
1 = WDT enabled
0 = WDT disabled

bit 2-0 **FOSC<2:0>:** Oscillator Selection bits
000 =LP oscillator: Low-power crystal on RA5/T1CKI/OSC1/CLKIN and RA4/AN3/$\overline{T1G}$/OSC2/CLKOUT
001 =XT oscillator: Crystal/resonator on RA5/T1CKI/OSC1/CLKIN and RA4/AN3/$\overline{T1G}$/OSC2/CLKOUT
010 =HS oscillator: High-speed crystal/resonator on RA5/T1CKI/OSC1/CLKIN and RA4/AN3/$\overline{T1G}$/OSC2/CLKOUT
011 =EC: I/O function on RA4/AN3/$\overline{T1G}$/OSC2/CLKOUT, CLKIN on RA5/T1CKI/OSC1/CLKIN
100 =INTOSCIO oscillator: I/O function on RA4/AN3/$\overline{T1G}$/OSC2/CLKOUT, I/O function on RA5/T1CKI/OSC1/CLKIN
101 =INTOSC oscillator: CLKOUT function on RA4/AN3/$\overline{T1G}$/OSC2/CLKOUT, I/O function on RA5/T1CKI/OSC1/CLKIN
110 =EXTRCIO oscillator: I/O function on RA4/AN3/$\overline{T1G}$/OSC2/CLKOUT, RC on RA5/T1CKI/OSC1/CLKIN
111 =EXTRC oscillator: CLKOUT function on RA4/AN3/$\overline{T1G}$/OSC2/CLKOUT, RC on RA5/T1CKI/OSC1/CLKIN

Note 1: Enabling Brown-out Reset does not automatically enable the Power-up Timer (PWRT).

Legend:			
R = Readable bit	W = Writable bit	U = Unimplemented bit, read as ‘1’	P = Programmable
-n = Value at POR	1 = bit is set	0 = bit is cleared	x = bit is unknown

12.2 Calibration Bits

The 8 MHz internal oscillator is factory calibrated. These calibration values are stored in fuses located in the Calibration Word (2008h). The Calibration Word is not erased when using the specified bulk erase sequence in the *Memory Programming Specification* (DS41204) and thus, does not require reprogramming.

12.3 Reset

The PIC12F609/615/617/12HV609/615 device differentiates between various kinds of Reset:

a) Power-on Reset (POR)
b) WDT Reset during normal operation
c) WDT Reset during Sleep
d) $\overline{\text{MCLR}}$ Reset during normal operation
e) $\overline{\text{MCLR}}$ Reset during Sleep
f) Brown-out Reset (BOR)

Some registers are not affected in any Reset condition; their status is unknown on POR and unchanged in any other Reset. Most other registers are reset to a "Reset state" on:

- Power-on Reset
- $\overline{\text{MCLR}}$ Reset
- $\overline{\text{MCLR}}$ Reset during Sleep
- WDT Reset
- Brown-out Reset (BOR)

WDT wake-up does not cause register resets in the same manner as a WDT Reset since wake-up is viewed as the resumption of normal operation. $\overline{\text{TO}}$ and $\overline{\text{PD}}$ bits are set or cleared differently in different Reset situations, as indicated in Table 12-2. Software can use these bits to determine the nature of the Reset. See Table 12-5 for a full description of Reset states of all registers.

A simplified block diagram of the On-Chip Reset Circuit is shown in Figure 12-1.

The $\overline{\text{MCLR}}$ Reset path has a noise filter to detect and ignore small pulses. See **Section 16.0 "Electrical Specifications"** for pulse-width specifications.

FIGURE 12-1: SIMPLIFIED BLOCK DIAGRAM OF ON-CHIP RESET CIRCUIT

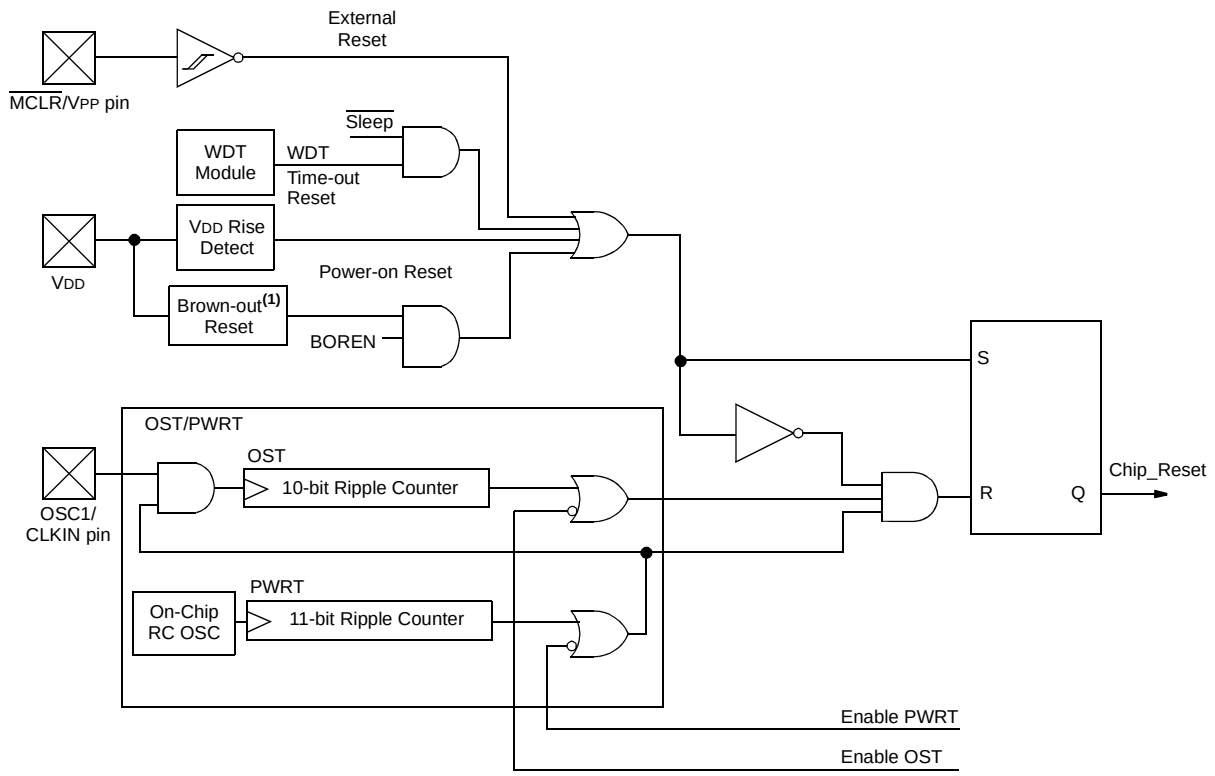

Note 1: Refer to the Configuration Word register (Register 12-1).

© 2010 Microchip Technology Inc.

12.3.1 POWER-ON RESET (POR)

The on-chip POR circuit holds the chip in Reset until VDD has reached a high enough level for proper operation. To take advantage of the POR, simply connect the MCLR pin through a resistor to VDD. This will eliminate external RC components usually needed to create Power-on Reset. A maximum rise time for VDD is required. See **Section 16.0 "Electrical Specifications"** for details. If the BOR is enabled, the maximum rise time specification does not apply. The BOR circuitry will keep the device in Reset until VDD reaches VBOR (see **Section 12.3.4 "Brown-out Reset (BOR)"**).

Note:	The POR circuit does not produce an internal Reset when VDD declines. To re-enable the POR, VDD must reach Vss for a minimum of 100 μs.

When the device starts normal operation (exits the Reset condition), device operating parameters (i.e., voltage, frequency, temperature, etc.) must be met to ensure proper operation. If these conditions are not met, the device must be held in Reset until the operating conditions are met.

For additional information, refer to Application Note AN607, *"Power-up Trouble Shooting"* (DS00607).

12.3.2 MCLR

PIC12F609/615/617/12HV609/615 has a noise filter in the MCLR Reset path. The filter will detect and ignore small pulses.

It should be noted that a WDT Reset does not drive MCLR pin low.

Voltages applied to the MCLR pin that exceed its specification can result in both MCLR Resets and excessive current beyond the device specification during the ESD event. For this reason, Microchip recommends that the MCLR pin no longer be tied directly to VDD. The use of an RC network, as shown in Figure 12-2, is suggested.

An internal MCLR option is enabled by clearing the MCLRE bit in the Configuration Word register. When MCLRE = 0, the Reset signal to the chip is generated internally. When the MCLRE = 1, the GP3/MCLR pin becomes an external Reset input. In this mode, the GP3/MCLR pin has a weak pull-up to VDD.

FIGURE 12-2: RECOMMENDED MCLR CIRCUIT

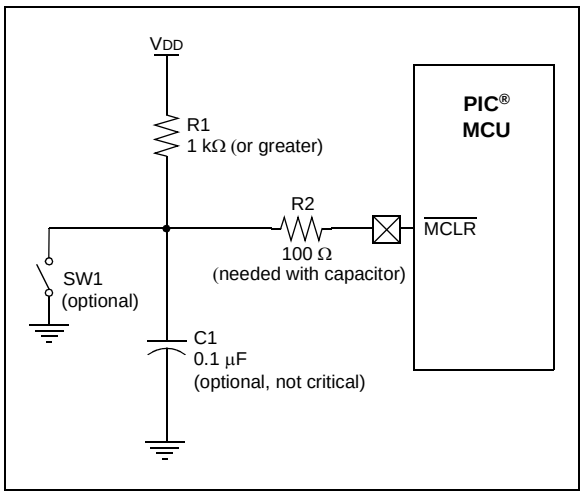

12.3.3 POWER-UP TIMER (PWRT)

The Power-up Timer provides a fixed 64 ms (nominal) time-out on power-up only, from POR or Brown-out Reset. The Power-up Timer operates from an internal RC oscillator. For more information, see **Section 4.4 "Internal Clock Modes"**. The chip is kept in Reset as long as PWRT is active. The PWRT delay allows the VDD to rise to an acceptable level. A Configuration bit, PWRTE, can disable (if set) or enable (if cleared or programmed) the Power-up Timer. The Power-up Timer should be enabled when Brown-out Reset is enabled, although it is not required.

The Power-up Timer delay will vary from chip-to-chip due to:

- VDD variation
- Temperature variation
- Process variation

See DC parameters for details (**Section 16.0 "Electrical Specifications"**).

Note:	Voltage spikes below VSS at the MCLR pin, inducing currents greater than 80 mA, may cause latch-up. Thus, a series resistor of 50-100 Ω should be used when applying a "low" level to the MCLR pin, rather than pulling this pin directly to VSS.

12.3.4 BROWN-OUT RESET (BOR)

The BOREN0 and BOREN1 bits in the Configuration Word register select one of three BOR modes. One mode has been added to allow control of the BOR enable for lower current during Sleep. By selecting BOREN<1:0> = 10, the BOR is automatically disabled in Sleep to conserve power and enabled on wake-up. See Register 12-1 for the Configuration Word definition.

A brown-out occurs when V_{DD} falls below V_{BOR} for greater than parameter T_{BOR} (see **Section 16.0 "Electrical Specifications"**). The brown-out condition will reset the device. This will occur regardless of V_{DD} slew rate. A Brown-out Reset may not occur if V_{DD} falls below V_{BOR} for less than parameter T_{BOR}.

On any Reset (Power-on, Brown-out Reset, Watchdog timer, etc.), the chip will remain in Reset until V_{DD} rises above V_{BOR} (see Figure 12-3). If enabled, the Power-up Timer will be invoked by the Reset and keep the chip in Reset an additional 64 ms.

Note:	The Power-up Timer is enabled by the $\overline{\text{PWRTE}}$ bit in the Configuration Word register.

If V_{DD} drops below V_{BOR} while the Power-up Timer is running, the chip will go back into a Brown-out Reset and the Power-up Timer will be re-initialized. Once V_{DD} rises above V_{BOR}, the Power-up Timer will execute a 64 ms Reset.

FIGURE 12-3: BROWN-OUT SITUATIONS

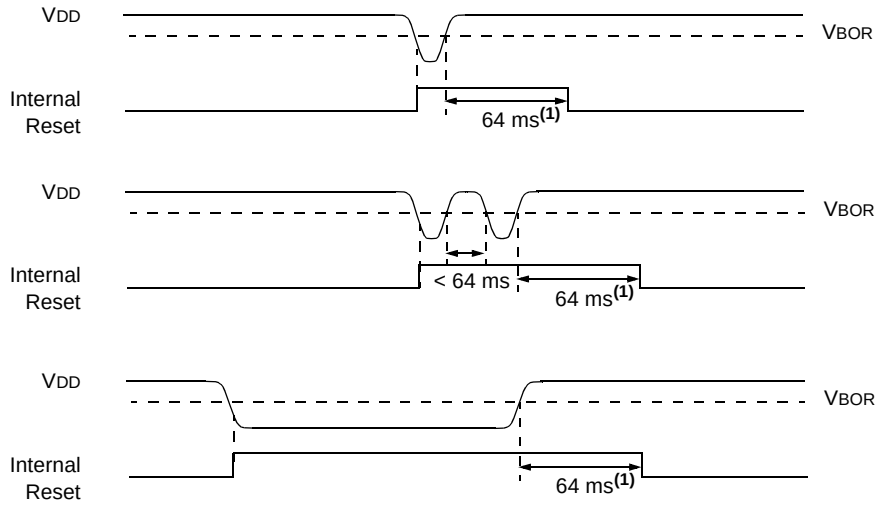

Note 1: 64 ms delay only if $\overline{\text{PWRTE}}$ bit is programmed to '0'.

© 2010 Microchip Technology Inc.

12.3.5 TIME-OUT SEQUENCE

On power-up, the time-out sequence is as follows:

- PWRT time-out is invoked after POR has expired.
- OST is activated after the PWRT time-out has expired.

The total time-out will vary based on oscillator configuration and $\overline{\text{PWRTE}}$ bit status. For example, in EC mode with $\overline{\text{PWRTE}}$ bit erased (PWRT disabled), there will be no time-out at all. Figure 12-4, Figure 12-5 and Figure 12-6 depict time-out sequences.

Since the time-outs occur from the POR pulse, if $\overline{\text{MCLR}}$ is kept low long enough, the time-outs will expire. Then, bringing $\overline{\text{MCLR}}$ high will begin execution immediately (see Figure 12-5). This is useful for testing purposes or to synchronize more than one PIC12F609/615/617/12HV609/615 device operating in parallel.

Table 12-6 shows the Reset conditions for some special registers, while Table 12-5 shows the Reset conditions for all the registers.

12.3.6 POWER CONTROL (PCON) REGISTER

The Power Control register PCON (address 8Eh) has two Status bits to indicate what type of Reset occurred last.

Bit 0 is $\overline{\text{BOR}}$ (Brown-out). $\overline{\text{BOR}}$ is unknown on Power-on Reset. It must then be set by the user and checked on subsequent Resets to see if $\overline{\text{BOR}}$ = 0, indicating that a Brown-out has occurred. The $\overline{\text{BOR}}$ Status bit is a “don’t care” and is not necessarily predictable if the brown-out circuit is disabled (BOREN<1:0> = 00 in the Configuration Word register).

Bit 1 is $\overline{\text{POR}}$ (Power-on Reset). It is a ‘0’ on Power-on Reset and unaffected otherwise. The user must write a ‘1’ to this bit following a Power-on Reset. On a subsequent Reset, if $\overline{\text{POR}}$ is ‘0’, it will indicate that a Power-on Reset has occurred (i.e., V_{DD} may have gone too low).

For more information, see **Section 12.3.4 “Brown-out Reset (BOR)”**.

TABLE 12-1: TIME-OUT IN VARIOUS SITUATIONS

Oscillator Configuration	Power-up		Brown-out Reset		Wake-up from Sleep
	$\overline{\text{PWRTE}}$ = 0	$\overline{\text{PWRTE}}$ = 1	$\overline{\text{PWRTE}}$ = 0	$\overline{\text{PWRTE}}$ = 1	
XT, HS, LP	T_{PWRT} + 1024 • T_{OSC}	1024 • T_{OSC}	T_{PWRT} + 1024 • T_{OSC}	1024 • T_{OSC}	1024 • T_{OSC}
RC, EC, INTOSC	T_{PWRT}	—	T_{PWRT}	—	—

TABLE 12-2: STATUS/PCON BITS AND THEIR SIGNIFICANCE

$\overline{\text{POR}}$	$\overline{\text{BOR}}$	$\overline{\text{TO}}$	$\overline{\text{PD}}$	Condition
0	x	1	1	Power-on Reset
u	0	1	1	Brown-out Reset
u	u	0	u	WDT Reset
u	u	0	0	WDT Wake-up
u	u	u	u	$\overline{\text{MCLR}}$ Reset during normal operation
u	u	1	0	$\overline{\text{MCLR}}$ Reset during Sleep

Legend: u = unchanged, x = unknown

TABLE 12-3: SUMMARY OF REGISTERS ASSOCIATED WITH BROWN-OUT RESET

Name	Bit 7	Bit 6	Bit 5	Bit 4	Bit 3	Bit 2	Bit 1	Bit 0	Value on POR, BOR	Value on all other Resets(1)
PCON	—	—	—	—	—	—	$\overline{\text{POR}}$	$\overline{\text{BOR}}$	---- --qq	---- --uu
STATUS	IRP	RP1	RP0	$\overline{\text{TO}}$	$\overline{\text{PD}}$	Z	DC	C	0001 1xxx	000q quuu

Legend: u = unchanged, x = unknown, – = unimplemented bit, reads as ‘0’, q = value depends on condition. Shaded cells are not used by BOR.

Note 1: Other (non Power-up) Resets include $\overline{\text{MCLR}}$ Reset and Watchdog Timer Reset during normal operation.

FIGURE 12-4: TIME-OUT SEQUENCE ON POWER-UP (DELAYED $\overline{\text{MCLR}}$): CASE 1

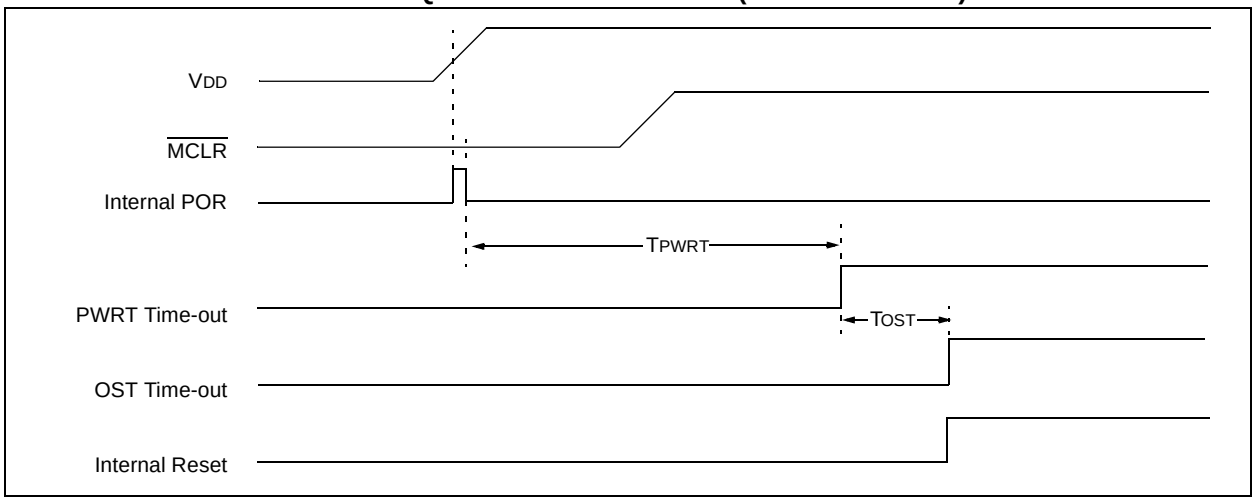

FIGURE 12-5: TIME-OUT SEQUENCE ON POWER-UP (DELAYED $\overline{\text{MCLR}}$): CASE 2

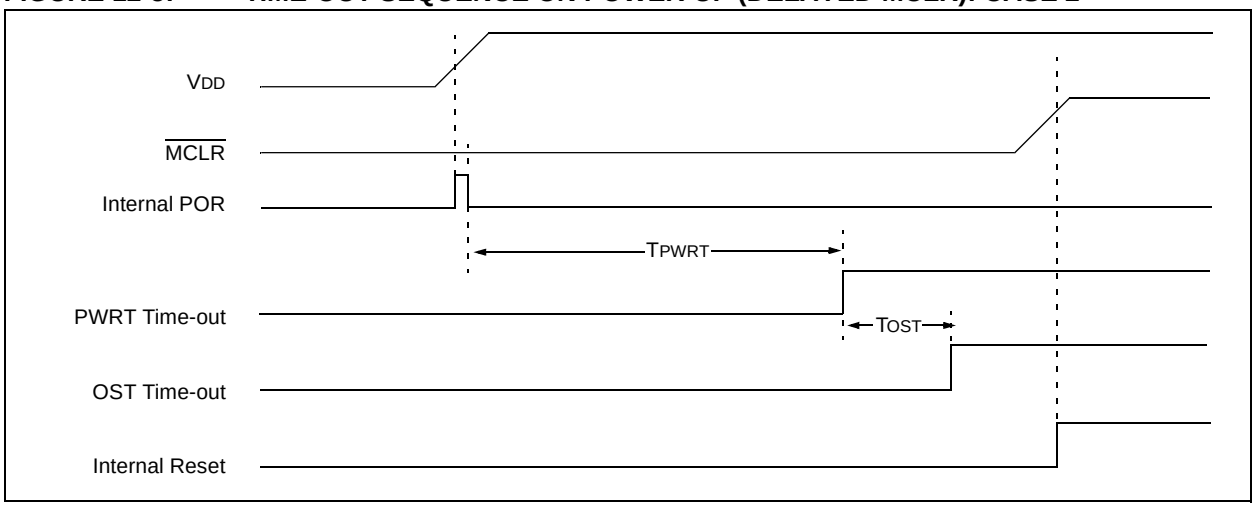

FIGURE 12-6: TIME-OUT SEQUENCE ON POWER-UP ($\overline{\text{MCLR}}$ WITH VDD)

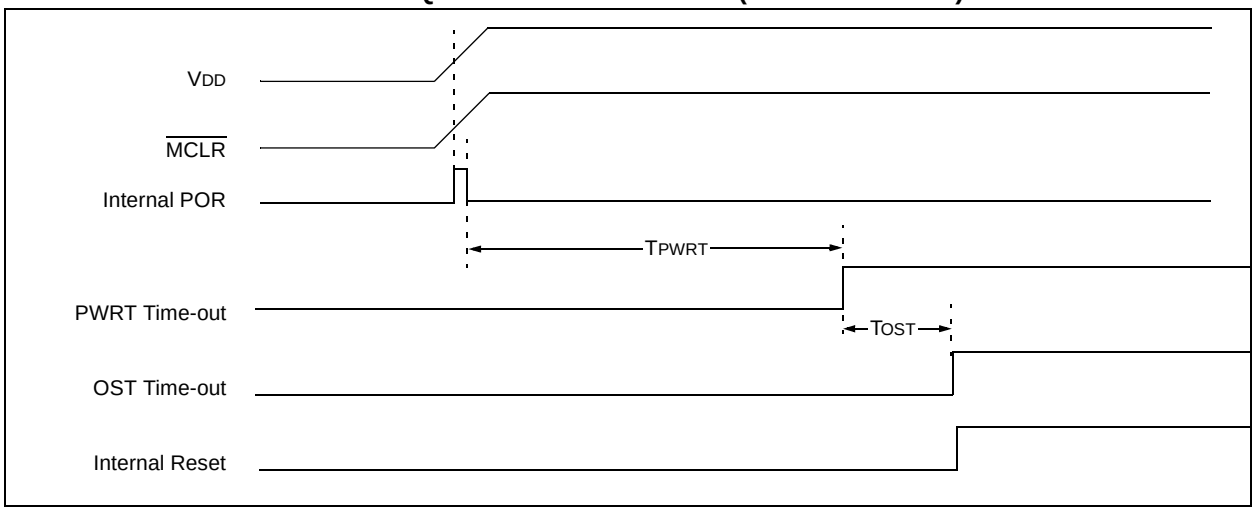

© 2010 Microchip Technology Inc.

TABLE 12-4: INITIALIZATION CONDITION FOR REGISTERS (PIC12F609/HV609)

Register	Address	Power-on Reset	$\overline{\text{MCLR}}$ Reset WDT Reset Brown-out Reset(1)	Wake-up from Sleep through Interrupt Wake-up from Sleep through WDT Time-out
W	—	xxxx xxxx	uuuu uuuu	uuuu uuuu
INDF	00h/80h	xxxx xxxx	xxxx xxxx	uuuu uuuu
TMR0	01h	xxxx xxxx	uuuu uuuu	uuuu uuuu
PCL	02h/82h	0000 0000	0000 0000	PC + 1(3)
STATUS	03h/83h	0001 1xxx	000q quuu(4)	uuuq quuu(4)
FSR	04h/84h	xxxx xxxx	uuuu uuuu	uuuu uuuu
GPIO	05h	--x0 x000	--u0 u000	--uu uuuu
PCLATH	0Ah/8Ah	---0 0000	---0 0000	---u uuuu
INTCON	0Bh/8Bh	0000 0000	0000 0000	uuuu uuuu(2)
PIR1	0Ch	----- 0--0	---- 0--0	---- u--u(2)
TMR1L	0Eh	xxxx xxxx	uuuu uuuu	uuuu uuuu
TMR1H	0Fh	xxxx xxxx	uuuu uuuu	uuuu uuuu
T1CON	10h	0000 0000	uuuu uuuu	-uuu uuuu
VRCON	19h	0-00 0000	0-00 0000	u-uu uuuu
CMCON0	1Ah	0000 -0-0	0000 -0-0	uuuu -u-u
CMCON1	1Ch	---0 0-10	---0 0-10	---u u-qu
OPTION_REG	81h	1111 1111	1111 1111	uuuu uuuu
TRISIO	85h	--11 1111	--11 1111	--uu uuuu
PIE1	8Ch	----- 0--0	---- 0--0	---- u--u
PCON	8Eh	---- --0x	---- --uu(1, 5)	---- --uu
OSCTUNE	90h	---0 0000	---u uuuu	---u uuuu
WPU	95h	--11 -111	--11 -111	--uu -uuu
IOC	96h	--00 0000	--00 0000	--uu uuuu
ANSEL	9Fh	---- 1-11	---- 1-11	---- q-qq

Legend: u = unchanged, x = unknown, – = unimplemented bit, reads as '0', q = value depends on condition.

Note 1: If VDD goes too low, Power-on Reset will be activated and registers will be affected differently.

2: One or more bits in INTCON and/or PIR1 will be affected (to cause wake-up).

3: When the wake-up is due to an interrupt and the GIE bit is set, the PC is loaded with the interrupt vector (0004h).

4: See Table 12-6 for Reset value for specific condition.

5: If Reset was due to brown-out, then bit 0 = 0. All other Resets will cause bit 0 = u.

TABLE 12-5: INITIALIZATION CONDITION FOR REGISTERS (PIC12F615/617/HV615)

Register	Address	Power-on Reset	$\overline{\text{MCLR}}$ Reset WDT Reset Brown-out Reset(1)	Wake-up from Sleep through Interrupt Wake-up from Sleep through WDT Time-out
W	—	xxxx xxxx	uuuu uuuu	uuuu uuuu
INDF	00h/80h	xxxx xxxx	xxxx xxxx	uuuu uuuu
TMR0	01h	xxxx xxxx	uuuu uuuu	uuuu uuuu
PCL	02h/82h	0000 0000	0000 0000	PC + 1(3)
STATUS	03h/83h	0001 1xxx	000q quuu(4)	uuuq quuu(4)
FSR	04h/84h	xxxx xxxx	uuuu uuuu	uuuu uuuu
GPIO	05h	--x0 x000	--u0 u000	--uu uuuu
PCLATH	0Ah/8Ah	---0 0000	---0 0000	---u uuuu
INTCON	0Bh/8Bh	0000 0000	0000 0000	uuuu uuuu(2)
PIR1	0Ch	-000 0-00	-000 0-00	-uuu u-uu(2)
TMR1L	0Eh	xxxx xxxx	uuuu uuuu	uuuu uuuu
TMR1H	0Fh	xxxx xxxx	uuuu uuuu	uuuu uuuu
T1CON	10h	0000 0000	uuuu uuuu	-uuu uuuu
TMR2(1)	11h	0000 0000	0000 0000	uuuu uuuu
T2CON(1)	12h	-000 0000	-000 0000	-uuu uuuu
CCPR1L(1)	13h	xxxx xxxx	uuuu uuuu	uuuu uuuu
CCPR1H(1)	14h	xxxx xxxx	uuuu uuuu	uuuu uuuu
CCP1CON(1)	15h	0-00 0000	0-00 0000	u-uu uuuu
PWM1CON(1)	16h	0000 0000	0000 0000	uuuu uuuu
ECCPAS(1)	17h	0000 0000	0000 0000	uuuu uuuu
VRCON	19h	0-00 0000	0-00 0000	u-uu uuuu
CMCON0	1Ah	0000 -0-0	0000 -0-0	uuuu -u-u
CMCON1	1Ch	---0 0-10	---0 0-10	---u u-qu
ADRESH(1)	1Eh	xxxx xxxx	uuuu uuuu	uuuu uuuu
ADCON0(1)	1Fh	00-0 0000	00-0 0000	uu-u uuuu
OPTION_REG	81h	1111 1111	1111 1111	uuuu uuuu
TRISIO	85h	--11 1111	--11 1111	--uu uuuu
PIE1	8Ch	-00- 0-00	-00- 0-00	-uu- u-uu
PCON	8Eh	---- --0x	---- --uu(1, 5)	---- --uu
OSCTUNE	90h	---0 0000	---u uuuu	---u uuuu
PR2	92h	1111 1111	1111 1111	1111 1111
APFCON	93h	---0 --00	---0 --00	---u --uu
WPU	95h	--11 -111	--11 -111	--uu -uuu
IOC	96h	--00 0000	--00 0000	--uu uuuu
PMCON1(6)	98h	---- -000	---- -000	---- -uuu
PMCON2(6)	99h	---- ----	---- ----	---- ----
PMADRL(6)	9Ah	0000 0000	0000 0000	uuuu uuuu

Legend: u = unchanged, x = unknown, – = unimplemented bit, reads as ‘0’, q = value depends on condition.

Note 1: If V_{DD} goes too low, Power-on Reset will be activated and registers will be affected differently.

2: One or more bits in INTCON and/or PIR1 will be affected (to cause wake-up).

3: When the wake-up is due to an interrupt and the GIE bit is set, the PC is loaded with the interrupt vector (0004h).

4: See Table 12-6 for Reset value for specific condition.

5: If Reset was due to brown-out, then bit 0 = 0. All other Resets will cause bit 0 = u.

6: For PIC12F617 only.

© 2010 Microchip Technology Inc.

TABLE 12-5: INITIALIZATION CONDITION FOR REGISTERS (CONTINUED)(PIC12F615/617/HV615)

Register	Address	Power-on Reset	$\overline{\text{MCLR}}$ Reset WDT Reset (Continued) Brown-out Reset(1)	Wake-up from Sleep through Interrupt Wake-up from Sleep through WDT Time-out (Continued)
PMADRH(6)	9Bh	---- -000	---- -000	---- -uuu
PMDATL(6)	9Ch	0000 0000	0000 0000	uuuu uuuu
PMDATH(6)	9Dh	--00 0000	--00 0000	--uu uuuu
ADRESL(1)	9Eh	xxxx xxxx	uuuu uuuu	uuuu uuuu
ANSEL	9Fh	-000 1111	-000 1111	-uuu qqqq

Legend: u = unchanged, x = unknown, – = unimplemented bit, reads as '0', q = value depends on condition.

Note 1: If VDD goes too low, Power-on Reset will be activated and registers will be affected differently.

2: One or more bits in INTCON and/or PIR1 will be affected (to cause wake-up).

3: When the wake-up is due to an interrupt and the GIE bit is set, the PC is loaded with the interrupt vector (0004h).

4: See Table 12-6 for Reset value for specific condition.

5: If Reset was due to brown-out, then bit 0 = 0. All other Resets will cause bit 0 = u.

6: For PIC12F617 only.

TABLE 12-6: INITIALIZATION CONDITION FOR SPECIAL REGISTERS

Condition	Program Counter	Status Register	PCON Register
Power-on Reset	000h	0001 1xxx	---- --0x
$\overline{\text{MCLR}}$ Reset during normal operation	000h	000u uuuu	---- --uu
$\overline{\text{MCLR}}$ Reset during Sleep	000h	0001 0uuu	---- --uu
WDT Reset	000h	0000 uuuu	---- --uu
WDT Wake-up	PC + 1	uuu0 0uuu	---- --uu
Brown-out Reset	000h	0001 1uuu	---- --10
Interrupt Wake-up from Sleep	PC + 1(1)	uuu1 0uuu	---- --uu

Legend: u = unchanged, x = unknown, – = unimplemented bit, reads as '0'.

Note 1: When the wake-up is due to an interrupt and Global Interrupt Enable bit, GIE, is set, the PC is loaded with the interrupt vector (0004h) after execution of PC + 1.

12.4 Interrupts

The PIC12F609/615/617/12HV609/615 has 8 sources of interrupt:

- External Interrupt GP2/INT
- Timer0 Overflow Interrupt
- GPIO Change Interrupts
- Comparator Interrupt
- A/D Interrupt (PIC12F615/617/HV615 only)
- Timer1 Overflow Interrupt
- Timer2 Match Interrupt (PIC12F615/617/HV615 only)
- Enhanced CCP Interrupt (PIC12F615/617/HV615 only)
- Flash Memory Self Write (PIC12F617 only)

The Interrupt Control register (INTCON) and Peripheral Interrupt Request Register 1 (PIR1) record individual interrupt requests in flag bits. The INTCON register also has individual and global interrupt enable bits.

The Global Interrupt Enable bit, GIE of the INTCON register, enables (if set) all unmasked interrupts, or disables (if cleared) all interrupts. Individual interrupts can be disabled through their corresponding enable bits in the INTCON register and PIE1 register. GIE is cleared on Reset.

When an interrupt is serviced, the following actions occur automatically:

- The GIE is cleared to disable any further interrupt.
- The return address is pushed onto the stack.
- The PC is loaded with 0004h.

The Return from Interrupt instruction, `RETFIE`, exits the interrupt routine, as well as sets the GIE bit, which re-enables unmasked interrupts.

The following interrupt flags are contained in the INTCON register:

- INT Pin Interrupt
- GPIO Change Interrupt
- Timer0 Overflow Interrupt

The peripheral interrupt flags are contained in the special register, PIR1. The corresponding interrupt enable bit is contained in special register, PIE1.

The following interrupt flags are contained in the PIR1 register:

- A/D Interrupt
- Comparator Interrupt
- Timer1 Overflow Interrupt
- Timer2 Match Interrupt
- Enhanced CCP Interrupt

For external interrupt events, such as the INT pin or GPIO change interrupt, the interrupt latency will be three or four instruction cycles. The exact latency depends upon when the interrupt event occurs (see Figure 12-8). The latency is the same for one or two-cycle instructions. Once in the Interrupt Service Routine, the source(s) of the interrupt can be determined by polling the interrupt flag bits. The interrupt flag bit(s) must be cleared in software before re-enabling interrupts to avoid multiple interrupt requests.

Note 1:	Individual interrupt flag bits are set, regardless of the status of their corresponding mask bit or the GIE bit.
2:	When an instruction that clears the GIE bit is executed, any interrupts that were pending for execution in the next cycle are ignored. The interrupts, which were ignored, are still pending to be serviced when the GIE bit is set again.

For additional information on Timer1, Timer2, comparators, ADC, Enhanced CCP modules, refer to the respective peripheral section.

12.4.1 GP2/INT INTERRUPT

The external interrupt on the GP2/INT pin is edge-triggered; either on the rising edge if the INTEDG bit of the OPTION register is set, or the falling edge, if the INTEDG bit is clear. When a valid edge appears on the GP2/INT pin, the INTF bit of the INTCON register is set. This interrupt can be disabled by clearing the INTE control bit of the INTCON register. The INTF bit must be cleared by software in the Interrupt Service Routine before re-enabling this interrupt. The GP2/INT interrupt can wake-up the processor from Sleep, if the INTE bit was set prior to going into Sleep. See **Section 12.7 “Power-Down Mode (Sleep)”** for details on Sleep and Figure 12-9 for timing of wake-up from Sleep through GP2/INT interrupt.

Note:	The ANSEL register must be initialized to configure an analog channel as a digital input. Pins configured as analog inputs will read ‘`0`’ and cannot generate an interrupt.

© 2010 Microchip Technology Inc.

12.4.2 TIMER0 INTERRUPT

An overflow (FFh → 00h) in the TMR0 register will set the T0IF bit of the INTCON register. The interrupt can be enabled/disabled by setting/clearing T0IE bit of the INTCON register. See **Section 6.0 "Timer0 Module"** for operation of the Timer0 module.

12.4.3 GPIO INTERRUPT-ON-CHANGE

An input change on GPIO sets the GPIF bit of the INTCON register. The interrupt can be enabled/disabled by setting/clearing the GPIE bit of the INTCON register. Plus, individual pins can be configured through the IOC register.

Note:	If a change on the I/O pin should occur when any GPIO operation is being executed, then the GPIF interrupt flag may not get set.

FIGURE 12-7: INTERRUPT LOGIC

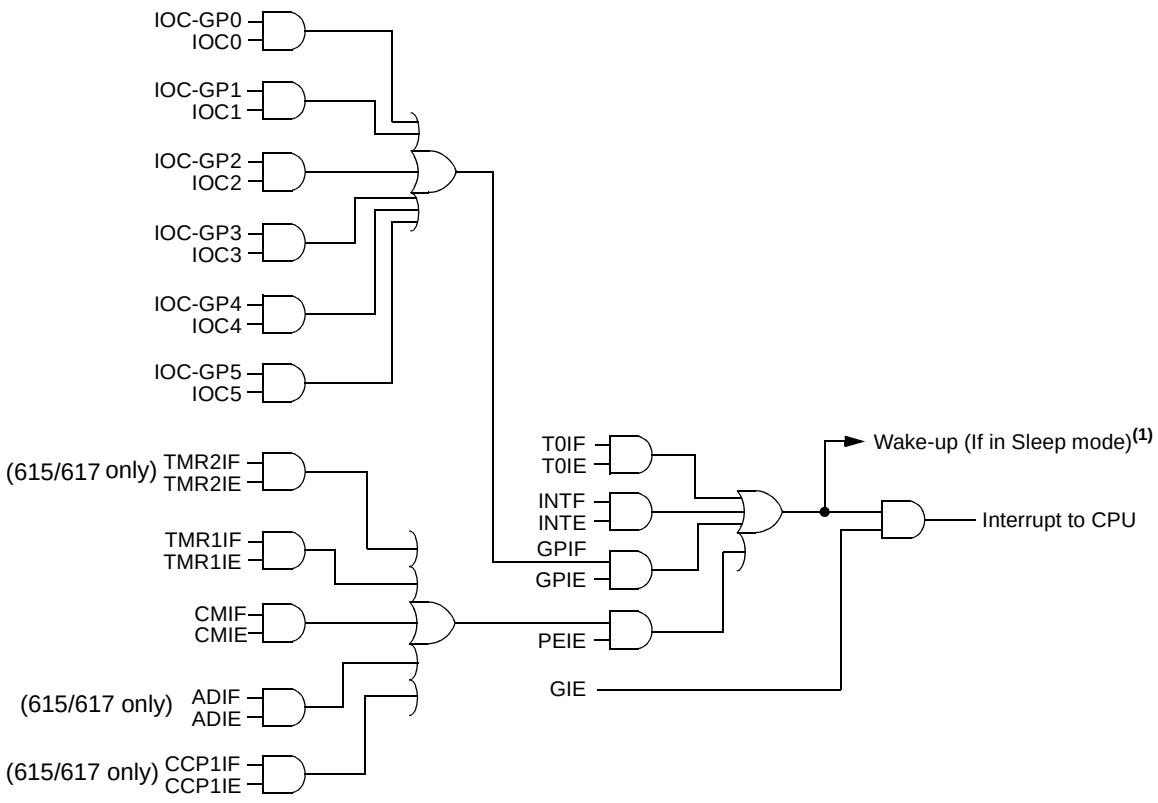

Note 1: Some peripherals depend upon the system clock for operation. Since the system clock is suspended during Sleep, only those peripherals which do not depend upon the system clock will wake the part from Sleep. See **Section 12.7.1 "Wake-up from Sleep"**.

FIGURE 12-8: INT PIN INTERRUPT TIMING

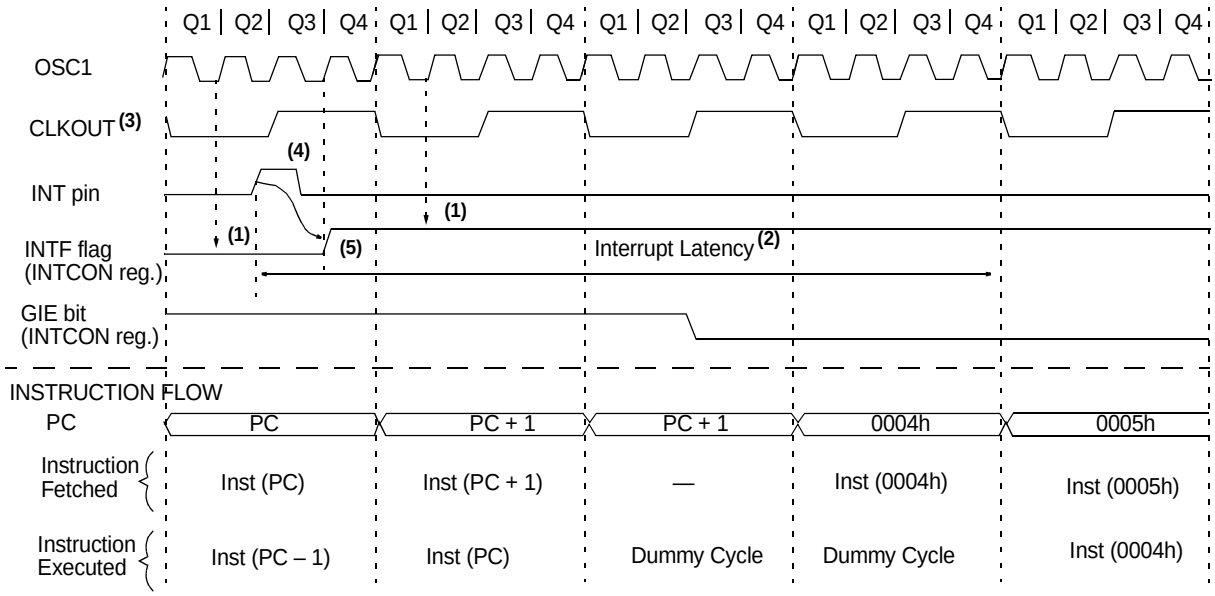

Note 1: INTF flag is sampled here (every Q1).

2: Asynchronous interrupt latency = 3-4 TCY. Synchronous latency = 3 TCY, where TCY = instruction cycle time. Latency is the same whether Inst (PC) is a single cycle or a 2-cycle instruction.

3: CLKOUT is available only in INTOSC and RC Oscillator modes.

4: For minimum width of INT pulse, refer to AC specifications in **Section 16.0 "Electrical Specifications"**.

5: INTF is enabled to be set any time during the Q4-Q1 cycles.

TABLE 12-7: SUMMARY OF REGISTERS ASSOCIATED WITH INTERRUPTS

Name	Bit 7	Bit 6	Bit 5	Bit 4	Bit 3	Bit 2	Bit 1	Bit 0	Value on POR, BOR	Value on all other Resets
INTCON	GIE	PEIE	T0IE	INTE	GPIE	T0IF	INTF	GPIF	0000 0000	0000 0000
IOC	—	—	IOC5	IOC4	IOC3	IOC2	IOC1	IOC0	--00 0000	--00 0000
PIR1	—	ADIF(1)	CCP1IF(1)	—	CMIF	—	TMR2IF(1)	TMR1IF	-00- 0-00	-000 0-00
PIE1	—	ADIE(1)	CCP1IE(1)	—	CMIE	—	TMR2IE(1)	TMR1IE	-00- 0-00	-000 0-00

Legend: x = unknown, u = unchanged, – = unimplemented read as '0', q = value depends upon condition. Shaded cells are not used by the interrupt module.

Note 1: PIC12F615/617/HV615 only.

© 2010 Microchip Technology Inc.

12.5 Context Saving During Interrupts

During an interrupt, only the return PC value is saved on the stack. Typically, users may wish to save key registers during an interrupt (e.g., W and STATUS registers). This must be implemented in software.

Temporary holding registers W_TEMP and STATUS_TEMP should be placed in the last 16 bytes of GPR (see Figure 2-3). These 16 locations are common to all banks and do not require banking. This makes context save and restore operations simpler. The code shown in Example 12-1 can be used to:

- Store the W register
- Store the STATUS register
- Execute the ISR code
- Restore the Status (and Bank Select Bit register)
- Restore the W register

Note:	The PIC12F609/615/617/12HV609/615 does not require saving the PCLATH. However, if computed GOTOs are used in both the ISR and the main code, the PCLATH must be saved and restored in the ISR.

EXAMPLE 12-1: SAVING STATUS AND W REGISTERS IN RAM

```
MOVWF   W_TEMP          ;Copy W to TEMP register
SWAPF   STATUS,W        ;Swap status to be saved into W
                        ;Swaps are used because they do not affect the status bits
MOVWF   STATUS_TEMP     ;Save status to bank zero STATUS_TEMP register
:
:(ISR)                  ;Insert user code here
:
SWAPF   STATUS_TEMP,W   ;Swap STATUS_TEMP register into W
                        ;(sets bank to original state)
MOVWF   STATUS          ;Move W into STATUS register
SWAPF   W_TEMP,F        ;Swap W_TEMP
SWAPF   W_TEMP,W        ;Swap W_TEMP into W
```

12.6 Watchdog Timer (WDT)

The Watchdog Timer is a free running, on-chip RC oscillator, which requires no external components. This RC oscillator is separate from the external RC oscillator of the CLKIN pin and INTOSC. That means that the WDT will run, even if the clock on the OSC1 and OSC2 pins of the device has been stopped (for example, by execution of a SLEEP instruction). During normal operation, a WDT time out generates a device Reset. If the device is in Sleep mode, a WDT time out causes the device to wake-up and continue with normal operation. The WDT can be permanently disabled by programming the Configuration bit, WDTE, as clear (**Section 12.1 “Configuration Bits”**).

12.6.1 WDT PERIOD

The WDT has a nominal time-out period of 18 ms (with no prescaler). The time-out periods vary with temperature, V_{DD} and process variations from part to part (see DC specs). If longer time-out periods are desired, a prescaler with a division ratio of up to 1:128 can be assigned to the WDT under software control by writing to the OPTION register. Thus, time-out periods up to 2.3 seconds can be realized.

The CLRWDT and SLEEP instructions clear the WDT and the prescaler, if assigned to the WDT, and prevent it from timing out and generating a device Reset.

The $\overline{TO}$ bit in the STATUS register will be cleared upon a Watchdog Timer time out.

12.6.2 WDT PROGRAMMING CONSIDERATIONS

It should also be taken in account that under worst-case conditions (i.e., V_{DD} = Min., Temperature = Max., Max. WDT prescaler) it may take several seconds before a WDT time out occurs.

FIGURE 12-2: WATCHDOG TIMER BLOCK DIAGRAM

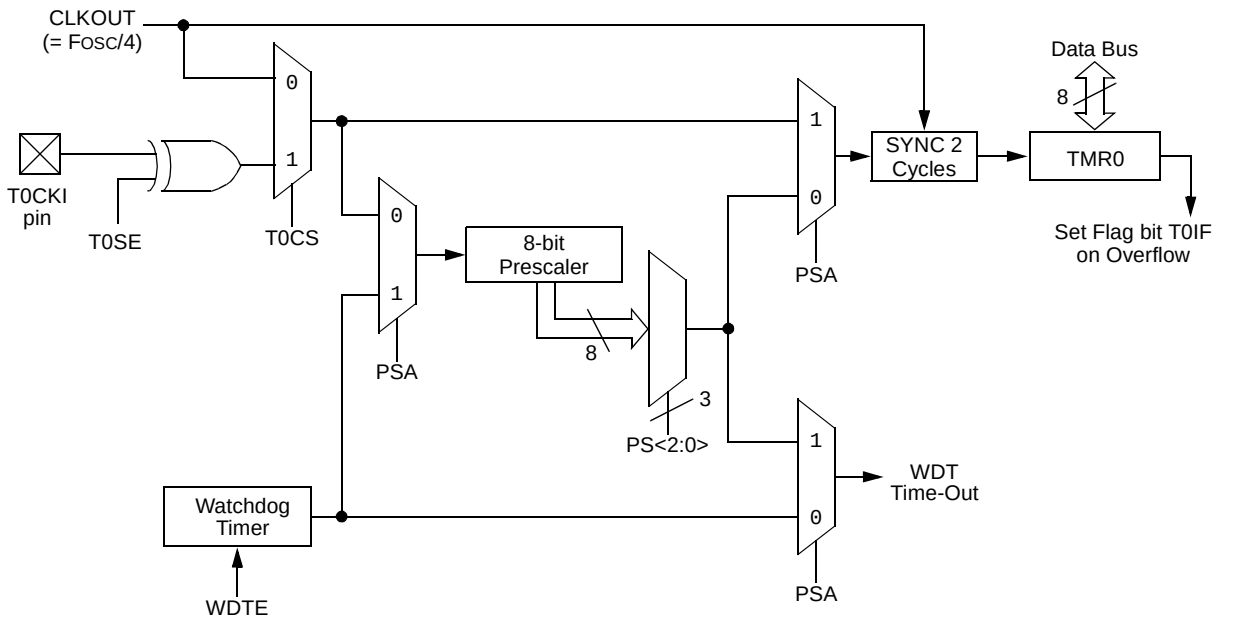

Note 1: T0SE, T0CS, PSA, PS<2:0> are bits in the OPTION register.

TABLE 12-8: WDT STATUS

Conditions	WDT
WDTE = 0	Cleared
CLRWDT Command	
Oscillator Fail Detected	
Exit Sleep + System Clock = T1OSC, EXTRC, INTRC, EXTCLK	
Exit Sleep + System Clock = XT, HS, LP	Cleared until the end of OST

TABLE 12-9: SUMMARY OF REGISTERS ASSOCIATED WITH WATCHDOG TIMER

Name	Bit 7	Bit 6	Bit 5	Bit 4	Bit 3	Bit 2	Bit 1	Bit 0	Value on POR, BOR	Value on all other Resets
OPTION_REG	$\overline{\text{GPPU}}$	INTEDG	T0CS	T0SE	PSA	PS2	PS1	PS0	1111 1111	1111 1111
CONFIG	IOSCFS	$\overline{\text{CP}}$	MCLRE	$\overline{\text{PWRTE}}$	WDTE	FOSC2	FOSC1	FOSC0	—	—

Legend: Shaded cells are not used by the Watchdog Timer.
Note 1: See Register 12-1 for operation of all Configuration Word register bits.

© 2010 Microchip Technology Inc.

12.7 Power-Down Mode (Sleep)

The Power-Down mode is entered by executing a SLEEP instruction.

If the Watchdog Timer is enabled:

- WDT will be cleared but keeps running.
- $\overline{PD}$ bit in the STATUS register is cleared.
- $\overline{TO}$ bit is set.
- Oscillator driver is turned off.
- I/O ports maintain the status they had before SLEEP was executed (driving high, low or high-impedance).

For lowest current consumption in this mode, all I/O pins should be either at V_{DD} or V_{SS}, with no external circuitry drawing current from the I/O pin and the comparators and CV_{REF} should be disabled. I/O pins that are high-impedance inputs should be pulled high or low externally to avoid switching currents caused by floating inputs. The T0CKI input should also be at V_{DD} or V_{SS} for lowest current consumption. The contribution from on-chip pull-ups on GPIO should be considered.

The $\overline{MCLR}$ pin must be at a logic high level.

Note:	It should be noted that a Reset generated by a WDT time-out does not drive $\overline{MCLR}$ pin low.

12.7.1 WAKE-UP FROM SLEEP

The device can wake-up from Sleep through one of the following events:

1. External Reset input on $\overline{MCLR}$ pin.
2. Watchdog Timer wake-up (if WDT was enabled).
3. Interrupt from GP2/INT pin, GPIO change or a peripheral interrupt.

The first event will cause a device Reset. The two latter events are considered a continuation of program execution. The $\overline{TO}$ and $\overline{PD}$ bits in the STATUS register can be used to determine the cause of device Reset. The $\overline{PD}$ bit, which is set on power-up, is cleared when Sleep is invoked. $\overline{TO}$ bit is cleared if WDT wake-up occurred.

The following peripheral interrupts can wake the device from Sleep:

1. Timer1 interrupt. Timer1 must be operating as an asynchronous counter.
2. ECCP Capture mode interrupt.
3. A/D conversion (when A/D clock source is RC).
4. Comparator output changes state.
5. Interrupt-on-change.
6. External Interrupt from INT pin.

Other peripherals cannot generate interrupts since during Sleep, no on-chip clocks are present.

When the SLEEP instruction is being executed, the next instruction (PC + 1) is prefetched. For the device to wake-up through an interrupt event, the corresponding interrupt enable bit must be set (enabled). Wake-up is regardless of the state of the GIE bit. If the GIE bit is clear (disabled), the device continues execution at the instruction after the SLEEP instruction. If the GIE bit is set (enabled), the device executes the instruction after the SLEEP instruction, then branches to the interrupt address (0004h). In cases where the execution of the instruction following SLEEP is not desirable, the user should have a NOP after the SLEEP instruction.

Note:	If the global interrupts are disabled (GIE is cleared) and any interrupt source has both its interrupt enable bit and the corresponding interrupt flag bits set, the device will immediately wake-up from Sleep.

The WDT is cleared when the device wakes up from Sleep, regardless of the source of wake-up.

12.7.2 WAKE-UP USING INTERRUPTS

When global interrupts are disabled (GIE cleared) and any interrupt source has both its interrupt enable bit and interrupt flag bit set, one of the following will occur:

- If the interrupt occurs **before** the execution of a SLEEP instruction, the SLEEP instruction will complete as a NOP. Therefore, the WDT and WDT prescaler and postscaler (if enabled) will not be cleared, the $\overline{TO}$ bit will not be set and the $\overline{PD}$ bit will not be cleared.
- If the interrupt occurs **during or after** the execution of a SLEEP instruction, the device will Immediately wake-up from Sleep. The SLEEP instruction is executed. Therefore, the WDT and WDT prescaler and postscaler (if enabled) will be cleared, the $\overline{TO}$ bit will be set and the $\overline{PD}$ bit will be cleared.

Even if the flag bits were checked before executing a SLEEP instruction, it may be possible for flag bits to become set before the SLEEP instruction completes. To determine whether a SLEEP instruction executed, test the $\overline{PD}$ bit. If the $\overline{PD}$ bit is set, the SLEEP instruction was executed as a NOP.

To ensure that the WDT is cleared, a CLRWDT instruction should be executed before a SLEEP instruction. See Figure 12-9 for more details.

FIGURE 12-9: WAKE-UP FROM SLEEP THROUGH INTERRUPT

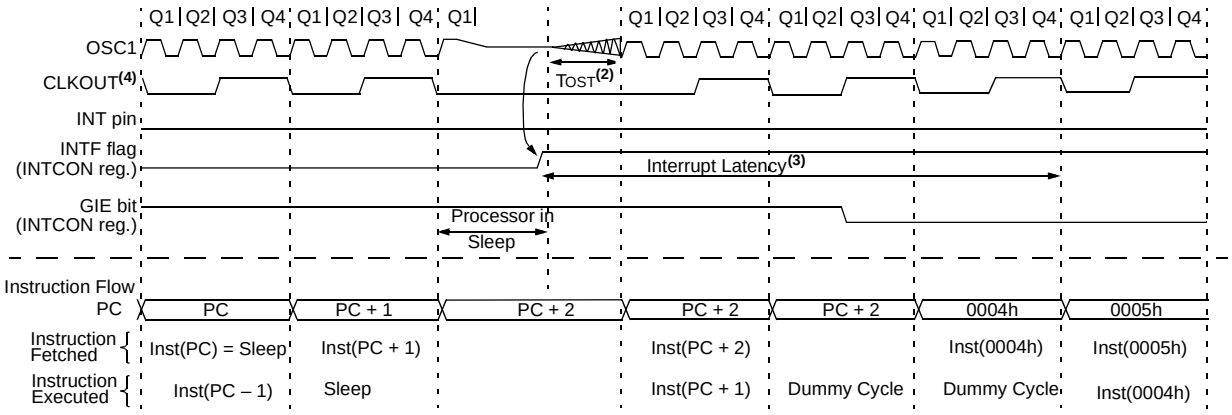

Note 1: XT, HS or LP Oscillator mode assumed.

2: TOST = 1024 TOSC (drawing not to scale). This delay does not apply to EC, INTOSC and RC Oscillator modes.

3: GIE = '1' assumed. In this case after wake-up, the processor jumps to 0004h. If GIE = '0', execution will continue in-line.

4: CLKOUT is not available in XT, HS, LP or EC Oscillator modes, but shown here for timing reference.

12.8 Code Protection

If the code protection bit(s) have not been programmed, the on-chip program memory can be read out using ICSP™ for verification purposes.

Note:	The entire Flash program memory will be erased when the code protection is turned off. See the *MemoryProgramming Specification* (DS41204) for more information.

12.9 ID Locations

Four memory locations (2000h-2003h) are designated as ID locations where the user can store checksum or other code identification numbers. These locations are not accessible during normal execution but are readable and writable during Program/Verify mode. Only the Least Significant 7 bits of the ID locations are used.

© 2010 Microchip Technology Inc.

12.10 In-Circuit Serial Programming™

ThePIC12F609/615/617/12HV609/615 microcontrollers can be serially programmed while in the end application circuit. This is simply done with five connections for:

- clock
- data
- power
- ground
- programming voltage

This allows customers to manufacture boards with unprogrammed devices and then program the microcontroller just before shipping the product. This also allows the most recent firmware or a custom firmware to be programmed.

The device is placed into a Program/Verify mode by holding the GP0 and GP1 pins low, while raising the MCLR (VPP) pin from VIL to VIHH. See the *Memory Programming Specification* (DS41284) for more information. GP0 becomes the programming data and GP1 becomes the programming clock. Both GP0 and GP1 are Schmitt Trigger inputs in Program/Verify mode.

A typical In-Circuit Serial Programming connection is shown in Figure 12-10.

FIGURE 12-10: TYPICAL IN-CIRCUIT SERIAL PROGRAMMING CONNECTION

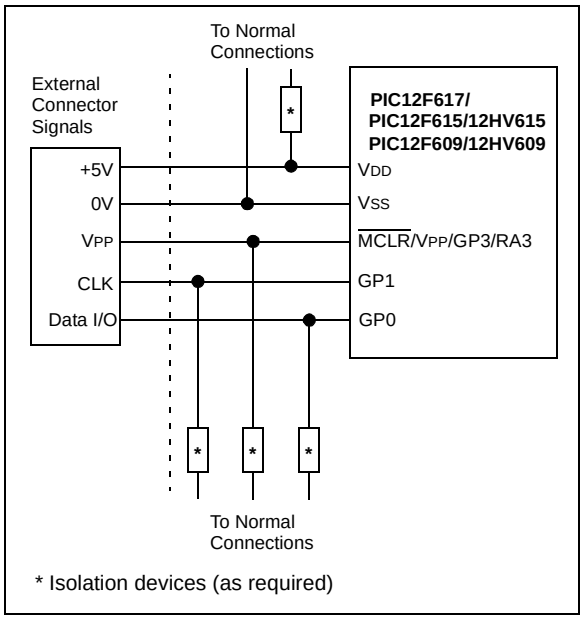

Note: To erase the device VDD must be above the Bulk Erase VDD minimum given in the *Memory Programming Specification* (DS41284)

12.11 In-Circuit Debugger

Since in-circuit debugging requires access to three pins, MPLAB® ICD 2 development with an 14-pin device is not practical. A special 28-pin PIC12F609/615/617/12HV609/615 ICD device is used with MPLAB ICD 2 to provide separate clock, data and MCLR pins and frees all normally available pins to the user.

A special debugging adapter allows the ICD device to be used in place of a PIC12F609/615/617/12HV609/615 device. The debugging adapter is the only source of the ICD device.

When the ICD pin on the PIC12F609/615/617/12HV609/615 ICD device is held low, the In-Circuit Debugger functionality is enabled. This function allows simple debugging functions when used with MPLAB ICD 2. When the microcontroller has this feature enabled, some of the resources are not available for general use. Table 12-10 shows which features are consumed by the background debugger.

TABLE 12-10: DEBUGGER RESOURCES

Resource	Description
I/O pins	ICDCLK, ICDDATA
Stack	1 level
Program Memory	Address 0h must be NOP 700h-7FFh

For more information, see "*MPLAB® ICD 2 In-Circuit Debugger User's Guide*" (DS51331), available on Microchip's web site (www.microchip.com).

FIGURE 12-11: 28 PIN ICD PINOUT

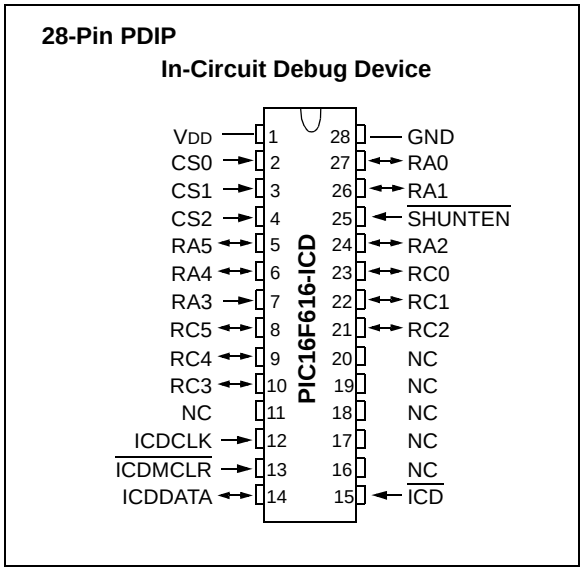

NOTES:

© 2010 Microchip Technology Inc.

13.0 VOLTAGE REGULATOR

The PIC12HV609/HV615 devices include a permanent internal 5 volt (nominal) shunt regulator in parallel with the VDD pin. This eliminates the need for an external voltage regulator in systems sourced by an unregulated supply. All external devices connected directly to the VDD pin will share the regulated supply voltage and contribute to the total VDD supply current (ILOAD).

13.1 Regulator Operation

A shunt regulator generates a specific supply voltage by creating a voltage drop across a pass resistor RSER. The voltage at the VDD pin of the microcontroller is monitored and compared to an internal voltage reference. The current through the resistor is then adjusted, based on the result of the comparison, to produce a voltage drop equal to the difference between the supply voltage VUNREG and the VDD of the microcontroller. See Figure 13-1 for voltage regulator schematic.

FIGURE 13-1: VOLTAGE REGULATOR

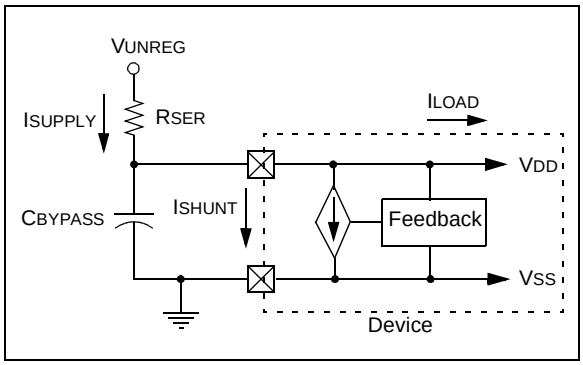

An external current limiting resistor, RSER, located between the unregulated supply, VUNREG, and the VDD pin, drops the difference in voltage between VUNREG and VDD. RSER must be between RMAX and RMIN as defined by Equation 13-1.

EQUATION 13-1: RSER LIMITING RESISTOR

$$R_{MAX} = \frac{(VU_{MIN} - 5V)}{1.05 \cdot (4\ mA + I_{LOAD})}$$

$$R_{MIN} = \frac{(VU_{MAX} - 5V)}{0.95 \cdot (50\ mA)}$$

Where:

RMAX = maximum value of RSER (ohms)

RMIN = minimum value of RSER (ohms)

VUMIN = minimum value of VUNREG

VUMAX = maximum value of VUNREG

VDD = regulated voltage (5V nominal)

ILOAD = maximum expected load current in mA including I/O pin currents and external circuits connected to VDD.

1.05 = compensation for +5% tolerance of RSER

0.95 = compensation for -5% tolerance of RSER

13.2 Regulator Considerations

The supply voltage VUNREG and load current are not constant. Therefore, the current range of the regulator is limited. Selecting a value for RSER must take these three factors into consideration.

Since the regulator uses the band gap voltage as the regulated voltage reference, this voltage reference is permanently enabled in the PIC12HV609/HV615 devices.

The shunt regulator will still consume current when below operating voltage range for the shunt regulator.

13.3 Design Considerations

For more information on using the shunt regulator and managing current load, see Application Note AN1035, "*Designing with HV Microcontrollers*" (DS01035).

NOTES:

© 2010 Microchip Technology Inc.

14.0 INSTRUCTION SET SUMMARY

The PIC12F609/615/617/12HV609/615 instruction set is highly orthogonal and is comprised of three basic categories:

- **Byte-oriented** operations
- **Bit-oriented** operations
- **Literal and control** operations

Each PIC16 instruction is a 14-bit word divided into an **opcode,** which specifies the instruction type and one or more **operands,** which further specify the operation of the instruction. The formats for each of the categories is presented in Figure 14-1, while the various opcode fields are summarized in Table 14-1.

Table 14-2 lists the instructions recognized by the MPASM™ assembler.

For **byte-oriented** instructions, ‘f’ represents a file register designator and ‘d’ represents a destination designator. The file register designator specifies which file register is to be used by the instruction.

The destination designator specifies where the result of the operation is to be placed. If ‘d’ is zero, the result is placed in the W register. If ‘d’ is one, the result is placed in the file register specified in the instruction.

For **bit-oriented** instructions, ‘b’ represents a bit field designator, which selects the bit affected by the operation, while ‘f’ represents the address of the file in which the bit is located.

For **literal and control** operations, ‘k’ represents an 8-bit or 11-bit constant, or literal value.

One instruction cycle consists of four oscillator periods; for an oscillator frequency of 4 MHz, this gives a normal instruction execution time of 1 μs. All instructions are executed within a single instruction cycle, unless a conditional test is true, or the program counter is changed as a result of an instruction. When this occurs, the execution takes two instruction cycles, with the second cycle executed as a `NOP`.

All instruction examples use the format ‘`0xhh`’ to represent a hexadecimal number, where ‘h’ signifies a hexadecimal digit.

14.1 Read-Modify-Write Operations

Any instruction that specifies a file register as part of the instruction performs a Read-Modify-Write (RMW) operation. The register is read, the data is modified, and the result is stored according to either the instruction or the destination designator ‘d’. A read operation is performed on a register even if the instruction writes to that register.

For example, a `CLRF GPIO` instruction will read GPIO, clear all the data bits, then write the result back to GPIO. This example would have the unintended consequence of clearing the condition that set the GPIF flag.

TABLE 14-1: OPCODE FIELD DESCRIPTIONS

Field	Description
f	Register file address (0x00 to 0x7F)
W	Working register (accumulator)
b	Bit address within an 8-bit file register
k	Literal field, constant data or label
x	Don’t care location (= `0` or `1`). The assembler will generate code with x = `0`. It is the recommended form of use for compatibility with all Microchip software tools.
d	Destination select; d = `0`: store result in `W`, d = `1`: store result in file register f. Default is d = `1`.
PC	Program Counter
$\overline{TO}$	Time-out bit
C	Carry bit
DC	Digit carry bit
Z	Zero bit
$\overline{PD}$	Power-down bit

FIGURE 14-1: GENERAL FORMAT FOR INSTRUCTIONS

Byte-oriented file register operations

13 … 8	7	6 … 0
OPCODE	d	f (FILE #)

d = `0` for destination W
d = `1` for destination f
f = 7-bit file register address

Bit-oriented file register operations

13 … 10	9 … 7	6 … 0
OPCODE	b (BIT #)	f (FILE #)

b = 3-bit bit address
f = 7-bit file register address

Literal and control operations

General

13 … 8	7 … 0
OPCODE	k (literal)

k = 8-bit immediate value

`CALL` and `GOTO` instructions only

13 … 11	10 … 0
OPCODE	k (literal)

k = 11-bit immediate value

TABLE 14-2: PIC12F609/615/617/12HV609/615 INSTRUCTION SET

Mnemonic, Operands		Description	Cycles	14-Bit Opcode MSb			LSb	Status Affected	Notes
BYTE-ORIENTED FILE REGISTER OPERATIONS									
ADDWF	f, d	Add W and f	1	00	0111	dfff	ffff	C, DC, Z	**1, 2**
ANDWF	f, d	AND W with f	1	00	0101	dfff	ffff	Z	**1, 2**
CLRF	f	Clear f	1	00	0001	lfff	ffff	Z	**2**
CLRW	–	Clear W	1	00	0001	0xxx	xxxx	Z	
COMF	f, d	Complement f	1	00	1001	dfff	ffff	Z	**1, 2**
DECF	f, d	Decrement f	1	00	0011	dfff	ffff	Z	**1, 2**
DECFSZ	f, d	Decrement f, Skip if 0	1**(2)**	00	1011	dfff	ffff		**1, 2, 3**
INCF	f, d	Increment f	1	00	1010	dfff	ffff	Z	**1, 2**
INCFSZ	f, d	Increment f, Skip if 0	1**(2)**	00	1111	dfff	ffff		**1, 2, 3**
IORWF	f, d	Inclusive OR W with f	1	00	0100	dfff	ffff	Z	**1, 2**
MOVF	f, d	Move f	1	00	1000	dfff	ffff	Z	**1, 2**
MOVWF	f	Move W to f	1	00	0000	lfff	ffff		
NOP	–	No Operation	1	00	0000	0xx0	0000		
RLF	f, d	Rotate Left f through Carry	1	00	1101	dfff	ffff	C	**1, 2**
RRF	f, d	Rotate Right f through Carry	1	00	1100	dfff	ffff	C	**1, 2**
SUBWF	f, d	Subtract W from f	1	00	0010	dfff	ffff	C, DC, Z	**1, 2**
SWAPF	f, d	Swap nibbles in f	1	00	1110	dfff	ffff		**1, 2**
XORWF	f, d	Exclusive OR W with f	1	00	0110	dfff	ffff	Z	**1, 2**
BIT-ORIENTED FILE REGISTER OPERATIONS									
BCF	f, b	Bit Clear f	1	01	00bb	bfff	ffff		**1, 2**
BSF	f, b	Bit Set f	1	01	01bb	bfff	ffff		**1, 2**
BTFSC	f, b	Bit Test f, Skip if Clear	1 **(2)**	01	10bb	bfff	ffff		**3**
BTFSS	f, b	Bit Test f, Skip if Set	1 **(2)**	01	11bb	bfff	ffff		**3**
LITERAL AND CONTROL OPERATIONS									
ADDLW	k	Add literal and W	1	11	111x	kkkk	kkkk	C, DC, Z	
ANDLW	k	AND literal with W	1	11	1001	kkkk	kkkk	Z	
CALL	k	Call Subroutine	2	10	0kkk	kkkk	kkkk		
CLRWDT	–	Clear Watchdog Timer	1	00	0000	0110	0100	$\overline{TO}$, $\overline{PD}$	
GOTO	k	Go to address	2	10	1kkk	kkkk	kkkk		
IORLW	k	Inclusive OR literal with W	1	11	1000	kkkk	kkkk	Z	
MOVLW	k	Move literal to W	1	11	00xx	kkkk	kkkk		
RETFIE	–	Return from interrupt	2	00	0000	0000	1001		
RETLW	k	Return with literal in W	2	11	01xx	kkkk	kkkk		
RETURN	–	Return from Subroutine	2	00	0000	0000	1000		
SLEEP	–	Go into Standby mode	1	00	0000	0110	0011	$\overline{TO}$, $\overline{PD}$	
SUBLW	k	Subtract W from literal	1	11	110x	kkkk	kkkk	C, DC, Z	
XORLW	k	Exclusive OR literal with W	1	11	1010	kkkk	kkkk	Z	

Note 1: When an I/O register is modified as a function of itself (e.g., `MOVF GPIO, 1`), the value used will be that value present on the pins themselves. For example, if the data latch is '1' for a pin configured as input and is driven low by an external device, the data will be written back with a '0'.

2: If this instruction is executed on the TMR0 register (and where applicable, d = 1), the prescaler will be cleared if assigned to the Timer0 module.

3: If the Program Counter (PC) is modified, or a conditional test is true, the instruction requires two cycles. The second cycle is executed as a `NOP`.

© 2010 Microchip Technology Inc.

14.2 Instruction Descriptions

ADDLW	Add literal and W
Syntax:	[*label*] ADDLW k
Operands:	$0 \le k \le 255$
Operation:	(W) + k → (W)
Status Affected:	C, DC, Z
Description:	The contents of the W register are added to the eight-bit literal 'k' and the result is placed in the W register.

ADDWF	Add W and f
Syntax:	[*label*] ADDWF f,d
Operands:	$0 \le f \le 127$ $d \in [0,1]$
Operation:	(W) + (f) → (destination)
Status Affected:	C, DC, Z
Description:	Add the contents of the W register with register 'f'. If 'd' is '0', the result is stored in the W register. If 'd' is '1', the result is stored back in register 'f'.

ANDLW	AND literal with W
Syntax:	[*label*] ANDLW k
Operands:	$0 \le k \le 255$
Operation:	(W) .AND. (k) → (W)
Status Affected:	Z
Description:	The contents of W register are AND'ed with the eight-bit literal 'k'. The result is placed in the W register.

ANDWF	AND W with f
Syntax:	[*label*] ANDWF f,d
Operands:	$0 \le f \le 127$ $d \in [0,1]$
Operation:	(W) .AND. (f) → (destination)
Status Affected:	Z
Description:	AND the W register with register 'f'. If 'd' is '0', the result is stored in the W register. If 'd' is '1', the result is stored back in register 'f'.

BCF	Bit Clear f
Syntax:	[*label*] BCF f,b
Operands:	$0 \le f \le 127$ $0 \le b \le 7$
Operation:	0 → (f<b>)
Status Affected:	None
Description:	Bit 'b' in register 'f' is cleared.

BSF	Bit Set f
Syntax:	[*label*] BSF f,b
Operands:	$0 \le f \le 127$ $0 \le b \le 7$
Operation:	1 → (f<b>)
Status Affected:	None
Description:	Bit 'b' in register 'f' is set.

BTFSC	Bit Test f, Skip if Clear
Syntax:	[*label*] BTFSC f,b
Operands:	$0 \le f \le 127$ $0 \le b \le 7$
Operation:	skip if (f<b>) = 0
Status Affected:	None
Description:	If bit 'b' in register 'f' is '1', the next instruction is executed. If bit 'b' in register 'f' is '0', the next instruction is discarded, and a NOP is executed instead, making this a two-cycle instruction.

BTFSS	Bit Test f, Skip if Set
Syntax:	[*label*] BTFSS f,b
Operands:	$0 \le f \le 127$ $0 \le b < 7$
Operation:	skip if (f<b>) = 1
Status Affected:	None
Description:	If bit 'b' in register 'f' is '0', the next instruction is executed. If bit 'b' is '1', then the next instruction is discarded and a NOP is executed instead, making this a two-cycle instruction.

CALL	Call Subroutine
Syntax:	[*label*] CALL k
Operands:	$0 \le k \le 2047$
Operation:	(PC)+ 1→ TOS, k → PC<10:0>, (PCLATH<4:3>) → PC<12:11>
Status Affected:	None
Description:	Call Subroutine. First, return address (PC + 1) is pushed onto the stack. The eleven-bit immediate address is loaded into PC bits <10:0>. The upper bits of the PC are loaded from PCLATH. CALL is a two-cycle instruction.

CLRF	Clear f
Syntax:	[*label*] CLRF f
Operands:	$0 \le f \le 127$
Operation:	00h → (f) 1 → Z
Status Affected:	Z
Description:	The contents of register 'f' are cleared and the Z bit is set.

CLRW	Clear W
Syntax:	[*label*] CLRW
Operands:	None
Operation:	00h → (W) 1 → Z
Status Affected:	Z
Description:	W register is cleared. Zero bit (Z) is set.

CLRWDT	Clear Watchdog Timer
Syntax:	[*label*] CLRWDT
Operands:	None
Operation:	00h → WDT 0 → WDT prescaler, 1 → $\overline{TO}$ 1 → $\overline{PD}$
Status Affected:	$\overline{TO}$, $\overline{PD}$
Description:	CLRWDT instruction resets the Watchdog Timer. It also resets the prescaler of the WDT. Status bits $\overline{TO}$ and $\overline{PD}$ are set.

COMF	Complement f
Syntax:	[*label*] COMF f,d
Operands:	$0 \le f \le 127$ $d \in [0,1]$
Operation:	($\bar{f}$) → (destination)
Status Affected:	Z
Description:	The contents of register 'f' are complemented. If 'd' is '0', the result is stored in W. If 'd' is '1', the result is stored back in register 'f'.

DECF	Decrement f
Syntax:	[*label*] DECF f,d
Operands:	$0 \le f \le 127$ $d \in [0,1]$
Operation:	(f) - 1 → (destination)
Status Affected:	Z
Description:	Decrement register 'f'. If 'd' is '0', the result is stored in the W register. If 'd' is '1', the result is stored back in register 'f'.

© 2010 Microchip Technology Inc.

DECFSZ	Decrement f, Skip if 0
Syntax:	[*label*] DECFSZ f,d
Operands:	$0 \le f \le 127$ $d \in [0,1]$
Operation:	(f) - 1 → (destination); skip if result = 0
Status Affected:	None
Description:	The contents of register 'f' are decremented. If 'd' is '0', the result is placed in the W register. If 'd' is '1', the result is placed back in register 'f'. If the result is '1', the next instruction is executed. If the result is '0', then a NOP is executed instead, making it a two-cycle instruction.

INCFSZ	Increment f, Skip if 0
Syntax:	[*label*] INCFSZ f,d
Operands:	$0 \le f \le 127$ $d \in [0,1]$
Operation:	(f) + 1 → (destination), skip if result = 0
Status Affected:	None
Description:	The contents of register 'f' are incremented. If 'd' is '0', the result is placed in the W register. If 'd' is '1', the result is placed back in register 'f'. If the result is '1', the next instruction is executed. If the result is '0', a NOP is executed instead, making it a two-cycle instruction.

GOTO	Unconditional Branch
Syntax:	[*label*] GOTO k
Operands:	$0 \le k \le 2047$
Operation:	k → PC<10:0> PCLATH<4:3> → PC<12:11>
Status Affected:	None
Description:	GOTO is an unconditional branch. The eleven-bit immediate value is loaded into PC bits <10:0>. The upper bits of PC are loaded from PCLATH<4:3>. GOTO is a two-cycle instruction.

IORLW	Inclusive OR literal with W
Syntax:	[*label*] IORLW k
Operands:	$0 \le k \le 255$
Operation:	(W) .OR. k → (W)
Status Affected:	Z
Description:	The contents of the W register are OR'ed with the eight-bit literal 'k'. The result is placed in the W register.

INCF	Increment f
Syntax:	[*label*] INCF f,d
Operands:	$0 \le f \le 127$ $d \in [0,1]$
Operation:	(f) + 1 → (destination)
Status Affected:	Z
Description:	The contents of register 'f' are incremented. If 'd' is '0', the result is placed in the W register. If 'd' is '1', the result is placed back in register 'f'.

IORWF	Inclusive OR W with f
Syntax:	[*label*] IORWF f,d
Operands:	$0 \le f \le 127$ $d \in [0,1]$
Operation:	(W) .OR. (f) → (destination)
Status Affected:	Z
Description:	Inclusive OR the W register with register 'f'. If 'd' is '0', the result is placed in the W register. If 'd' is '1', the result is placed back in register 'f'.

MOVF	Move f
Syntax:	[*label*] MOVF f,d
Operands:	$0 \le f \le 127$ $d \in [0,1]$
Operation:	(f) → (dest)
Status Affected:	Z
Description:	The contents of register 'f' is moved to a destination dependent upon the status of 'd'. If d = 0, destination is W register. If d = 1, the destination is file register 'f' itself. d = 1 is useful to test a file register since Status flag Z is affected.
Words:	1
Cycles:	1
Example:	`MOVF FSR, 0` After Instruction W = value in FSR register Z = 1

MOVWF	Move W to f
Syntax:	[*label*] MOVWF f
Operands:	$0 \le f \le 127$
Operation:	(W) → (f)
Status Affected:	None
Description:	Move data from W register to register 'f'.
Words:	1
Cycles:	1
Example:	`MOVW OPTION F` Before Instruction OPTION = 0xFF W = 0x4F After Instruction OPTION = 0x4F W = 0x4F

MOVLW	Move literal to W
Syntax:	[*label*] MOVLW k
Operands:	$0 \le k \le 255$
Operation:	k → (W)
Status Affected:	None
Description:	The eight-bit literal 'k' is loaded into W register. The "don't cares" will assemble as '0's.
Words:	1
Cycles:	1
Example:	`MOVLW 0x5A` After Instruction W = 0x5A

NOP	No Operation
Syntax:	[*label*] NOP
Operands:	None
Operation:	No operation
Status Affected:	None
Description:	No operation.
Words:	1
Cycles:	1
Example:	`NOP`

© 2010 Microchip Technology Inc.

RETFIE	Return from Interrupt
Syntax:	[*label*] RETFIE
Operands:	None
Operation:	TOS → PC, 1 → GIE
Status Affected:	None
Description:	Return from Interrupt. Stack is POPed and Top-of-Stack (TOS) is loaded in the PC. Interrupts are enabled by setting Global Interrupt Enable bit, GIE (INT-CON<7>). This is a two-cycle instruction.
Words:	1
Cycles:	2
Example:	`RETFIE` After Interrupt PC = TOS GIE = 1

RETLW	Return with literal in W
Syntax:	[*label*] RETLW k
Operands:	$0 \le k \le 255$
Operation:	k → (W); TOS → PC
Status Affected:	None
Description:	The W register is loaded with the eight-bit literal ‘k’. The program counter is loaded from the top of the stack (the return address). This is a two-cycle instruction.
Words:	1
Cycles:	2

Example:	`CALL TABLE;W contains`
	`;table offset`
	`;value`
	`GOTO DONE`
	`TABLE`
	•
	•
	`ADDWF PC ;W = offset`
	`RETLW k1 ;Begin table`
	`RETLW k2 ;`
	•
	•
	•
	`RETLW kn ;End of table`
	`DONE`
	Before Instruction
	W = 0x07
	After Instruction
	W = value of k8

RETURN	Return from Subroutine
Syntax:	[*label*] RETURN
Operands:	None
Operation:	TOS → PC
Status Affected:	None
Description:	Return from subroutine. The stack is POPed and the top of the stack (TOS) is loaded into the program counter. This is a two-cycle instruction.

RLF	Rotate Left f through Carry
Syntax:	[*label*] RLF f,d
Operands:	$0 \le f \le 127$ $d \in [0,1]$
Operation:	See description below
Status Affected:	C
Description:	The contents of register ‘f’ are rotated one bit to the left through the Carry flag. If ‘d’ is ‘0’, the result is placed in the W register. If ‘d’ is ‘1’, the result is stored back in register ‘f’. 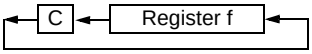
Words:	1
Cycles:	1

Example:	`RLF REG1,0`
	Before Instruction
	`REG1 = 1110 0110`
	`C = 0`
	After Instruction
	`REG1 = 1110 0110`
	`W = 1100 1100`
	`C = 1`

RRF	Rotate Right f through Carry
Syntax:	[*label*] RRF f,d
Operands:	$0 \le f \le 127$ $d \in [0,1]$
Operation:	See description below
Status Affected:	C
Description:	The contents of register ‘f’ are rotated one bit to the right through the Carry flag. If ‘d’ is ‘0’, the result is placed in the W register. If ‘d’ is ‘1’, the result is placed back in register ‘f’. 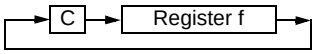

SLEEP	Enter Sleep mode
Syntax:	[*label*] SLEEP
Operands:	None
Operation:	00h → WDT, 0 → WDT prescaler, 1 → $\overline{TO}$, 0 → $\overline{PD}$
Status Affected:	$\overline{TO}$, $\overline{PD}$
Description:	The power-down Status bit, $\overline{PD}$ is cleared. Time-out Status bit, $\overline{TO}$ is set. Watchdog Timer and its prescaler are cleared. The processor is put into Sleep mode with the oscillator stopped.

SUBLW	Subtract W from literal
Syntax:	[*label*] SUBLW k
Operands:	$0 \le k \le 255$
Operation:	k - (W) → (W)
Status Affected:	C, DC, Z
Description:	The W register is subtracted (2’s complement method) from the eight-bit literal ‘k’. The result is placed in the W register.

Result	Condition
C = 0	W > k
C = 1	W ≤ k
DC = 0	W<3:0> > k<3:0>
DC = 1	W<3:0> ≤ k<3:0>

© 2010 Microchip Technology Inc.

SUBWF	Subtract W from f
Syntax:	[*label*] SUBWF f,d
Operands:	$0 \le f \le 127$ $d \in [0,1]$
Operation:	(f) - (W) → (destination)
Status Affected:	C, DC, Z
Description:	Subtract (2's complement method) W register from register 'f'. If 'd' is '0', the result is stored in the W register. If 'd' is '1', the result is stored back in register 'f'.

C = 0	W > f
C = 1	W ≤ f
DC = 0	W<3:0> > f<3:0>
DC = 1	W<3:0> ≤ f<3:0>

SWAPF	Swap Nibbles in f
Syntax:	[*label*] SWAPF f,d
Operands:	$0 \le f \le 127$ $d \in [0,1]$
Operation:	(f<3:0>) → (destination<7:4>), (f<7:4>) → (destination<3:0>)
Status Affected:	None
Description:	The upper and lower nibbles of register 'f' are exchanged. If 'd' is '0', the result is placed in the W register. If 'd' is '1', the result is placed in register 'f'.

XORLW	Exclusive OR literal with W
Syntax:	[*label*] XORLW k
Operands:	$0 \le k \le 255$
Operation:	(W) .XOR. k → (W)
Status Affected:	Z
Description:	The contents of the W register are XOR'ed with the eight-bit literal 'k'. The result is placed in the W register.

XORWF	Exclusive OR W with f
Syntax:	[*label*] XORWF f,d
Operands:	$0 \le f \le 127$ $d \in [0,1]$
Operation:	(W) .XOR. (f) → (destination)
Status Affected:	Z
Description:	Exclusive OR the contents of the W register with register 'f'. If 'd' is '0', the result is stored in the W register. If 'd' is '1', the result is stored back in register 'f'.

NOTES:

© 2010 Microchip Technology Inc.

15.0 DEVELOPMENT SUPPORT

The PIC® microcontrollers and dsPIC® digital signal controllers are supported with a full range of software and hardware development tools:

- Integrated Development Environment
  - MPLAB® IDE Software
- Compilers/Assemblers/Linkers
  - MPLAB C Compiler for Various Device Families
  - HI-TECH C for Various Device Families
  - MPASM™ Assembler
  - MPLINK™ Object Linker/ MPLIB™ Object Librarian
  - MPLAB Assembler/Linker/Librarian for Various Device Families
- Simulators
  - MPLAB SIM Software Simulator
- Emulators
  - MPLAB REAL ICE™ In-Circuit Emulator
- In-Circuit Debuggers
  - MPLAB ICD 3
  - PICkit™ 3 Debug Express
- Device Programmers
  - PICkit™ 2 Programmer
  - MPLAB PM3 Device Programmer
- Low-Cost Demonstration/Development Boards, Evaluation Kits, and Starter Kits

15.1 MPLAB Integrated Development Environment Software

The MPLAB IDE software brings an ease of software development previously unseen in the 8/16/32-bit microcontroller market. The MPLAB IDE is a Windows® operating system-based application that contains:

- A single graphical interface to all debugging tools
  - Simulator
  - Programmer (sold separately)
  - In-Circuit Emulator (sold separately)
  - In-Circuit Debugger (sold separately)
- A full-featured editor with color-coded context
- A multiple project manager
- Customizable data windows with direct edit of contents
- High-level source code debugging
- Mouse over variable inspection
- Drag and drop variables from source to watch windows
- Extensive on-line help
- Integration of select third party tools, such as IAR C Compilers

The MPLAB IDE allows you to:

- Edit your source files (either C or assembly)
- One-touch compile or assemble, and download to emulator and simulator tools (automatically updates all project information)
- Debug using:
  - Source files (C or assembly)
  - Mixed C and assembly
  - Machine code

MPLAB IDE supports multiple debugging tools in a single development paradigm, from the cost-effective simulators, through low-cost in-circuit debuggers, to full-featured emulators. This eliminates the learning curve when upgrading to tools with increased flexibility and power.

15.2 MPLAB C Compilers for Various Device Families

The MPLAB C Compiler code development systems are complete ANSI C compilers for Microchip's PIC18, PIC24 and PIC32 families of microcontrollers and the dsPIC30 and dsPIC33 families of digital signal controllers. These compilers provide powerful integration capabilities, superior code optimization and ease of use.

For easy source level debugging, the compilers provide symbol information that is optimized to the MPLAB IDE debugger.

15.3 HI-TECH C for Various Device Families

The HI-TECH C Compiler code development systems are complete ANSI C compilers for Microchip's PIC family of microcontrollers and the dsPIC family of digital signal controllers. These compilers provide powerful integration capabilities, omniscient code generation and ease of use.

For easy source level debugging, the compilers provide symbol information that is optimized to the MPLAB IDE debugger.

The compilers include a macro assembler, linker, preprocessor, and one-step driver, and can run on multiple platforms.

15.4 MPASM Assembler

The MPASM Assembler is a full-featured, universal macro assembler for PIC10/12/16/18 MCUs.

The MPASM Assembler generates relocatable object files for the MPLINK Object Linker, Intel® standard HEX files, MAP files to detail memory usage and symbol reference, absolute LST files that contain source lines and generated machine code and COFF files for debugging.

The MPASM Assembler features include:

- Integration into MPLAB IDE projects
- User-defined macros to streamline assembly code
- Conditional assembly for multi-purpose source files
- Directives that allow complete control over the assembly process

15.5 MPLINK Object Linker/ MPLIB Object Librarian

The MPLINK Object Linker combines relocatable objects created by the MPASM Assembler and the MPLAB C18 C Compiler. It can link relocatable objects from precompiled libraries, using directives from a linker script.

The MPLIB Object Librarian manages the creation and modification of library files of precompiled code. When a routine from a library is called from a source file, only the modules that contain that routine will be linked in with the application. This allows large libraries to be used efficiently in many different applications.

The object linker/library features include:

- Efficient linking of single libraries instead of many smaller files
- Enhanced code maintainability by grouping related modules together
- Flexible creation of libraries with easy module listing, replacement, deletion and extraction

15.6 MPLAB Assembler, Linker and Librarian for Various Device Families

MPLAB Assembler produces relocatable machine code from symbolic assembly language for PIC24, PIC32 and dsPIC devices. MPLAB C Compiler uses the assembler to produce its object file. The assembler generates relocatable object files that can then be archived or linked with other relocatable object files and archives to create an executable file. Notable features of the assembler include:

- Support for the entire device instruction set
- Support for fixed-point and floating-point data
- Command line interface
- Rich directive set
- Flexible macro language
- MPLAB IDE compatibility

© 2010 Microchip Technology Inc.

15.7 MPLAB SIM Software Simulator

The MPLAB SIM Software Simulator allows code development in a PC-hosted environment by simulating the PIC MCUs and dsPIC® DSCs on an instruction level. On any given instruction, the data areas can be examined or modified and stimuli can be applied from a comprehensive stimulus controller. Registers can be logged to files for further run-time analysis. The trace buffer and logic analyzer display extend the power of the simulator to record and track program execution, actions on I/O, most peripherals and internal registers.

The MPLAB SIM Software Simulator fully supports symbolic debugging using the MPLAB C Compilers, and the MPASM and MPLAB Assemblers. The software simulator offers the flexibility to develop and debug code outside of the hardware laboratory environment, making it an excellent, economical software development tool.

15.8 MPLAB REAL ICE In-Circuit Emulator System

MPLAB REAL ICE In-Circuit Emulator System is Microchip's next generation high-speed emulator for Microchip Flash DSC and MCU devices. It debugs and programs PIC® Flash MCUs and dsPIC® Flash DSCs with the easy-to-use, powerful graphical user interface of the MPLAB Integrated Development Environment (IDE), included with each kit.

The emulator is connected to the design engineer's PC using a high-speed USB 2.0 interface and is connected to the target with either a connector compatible with in-circuit debugger systems (RJ11) or with the new high-speed, noise tolerant, Low-Voltage Differential Signal (LVDS) interconnection (CAT5).

The emulator is field upgradable through future firmware downloads in MPLAB IDE. In upcoming releases of MPLAB IDE, new devices will be supported, and new features will be added. MPLAB REAL ICE offers significant advantages over competitive emulators including low-cost, full-speed emulation, run-time variable watches, trace analysis, complex breakpoints, a ruggedized probe interface and long (up to three meters) interconnection cables.

15.9 MPLAB ICD 3 In-Circuit Debugger System

MPLAB ICD 3 In-Circuit Debugger System is Microchip's most cost effective high-speed hardware debugger/programmer for Microchip Flash Digital Signal Controller (DSC) and microcontroller (MCU) devices. It debugs and programs PIC® Flash microcontrollers and dsPIC® DSCs with the powerful, yet easy-to-use graphical user interface of MPLAB Integrated Development Environment (IDE).

The MPLAB ICD 3 In-Circuit Debugger probe is connected to the design engineer's PC using a high-speed USB 2.0 interface and is connected to the target with a connector compatible with the MPLAB ICD 2 or MPLAB REAL ICE systems (RJ-11). MPLAB ICD 3 supports all MPLAB ICD 2 headers.

15.10 PICkit 3 In-Circuit Debugger/ Programmer and PICkit 3 Debug Express

The MPLAB PICkit 3 allows debugging and programming of PIC® and dsPIC® Flash microcontrollers at a most affordable price point using the powerful graphical user interface of the MPLAB Integrated Development Environment (IDE). The MPLAB PICkit 3 is connected to the design engineer's PC using a full speed USB interface and can be connected to the target via an Microchip debug (RJ-11) connector (compatible with MPLAB ICD 3 and MPLAB REAL ICE). The connector uses two device I/O pins and the reset line to implement in-circuit debugging and In-Circuit Serial Programming™.

The PICkit 3 Debug Express include the PICkit 3, demo board and microcontroller, hookup cables and CDROM with user's guide, lessons, tutorial, compiler and MPLAB IDE software.

15.11 PICkit 2 Development Programmer/Debugger and PICkit 2 Debug Express

The PICkit™ 2 Development Programmer/Debugger is a low-cost development tool with an easy to use interface for programming and debugging Microchip's Flash families of microcontrollers. The full featured Windows® programming interface supports baseline (PIC10F, PIC12F5xx, PIC16F5xx), midrange (PIC12F6xx, PIC16F), PIC18F, PIC24, dsPIC30, dsPIC33, and PIC32 families of 8-bit, 16-bit, and 32-bit microcontrollers, and many Microchip Serial EEPROM products. With Microchip's powerful MPLAB Integrated Development Environment (IDE) the PICkit™ 2 enables in-circuit debugging on most PIC® microcontrollers. In-Circuit-Debugging runs, halts and single steps the program while the PIC microcontroller is embedded in the application. When halted at a breakpoint, the file registers can be examined and modified.

The PICkit 2 Debug Express include the PICkit 2, demo board and microcontroller, hookup cables and CDROM with user's guide, lessons, tutorial, compiler and MPLAB IDE software.

15.12 MPLAB PM3 Device Programmer

The MPLAB PM3 Device Programmer is a universal, CE compliant device programmer with programmable voltage verification at V_{DDMIN} and V_{DDMAX} for maximum reliability. It features a large LCD display (128 x 64) for menus and error messages and a modular, detachable socket assembly to support various package types. The ICSP™ cable assembly is included as a standard item. In Stand-Alone mode, the MPLAB PM3 Device Programmer can read, verify and program PIC devices without a PC connection. It can also set code protection in this mode. The MPLAB PM3 connects to the host PC via an RS-232 or USB cable. The MPLAB PM3 has high-speed communications and optimized algorithms for quick programming of large memory devices and incorporates an MMC card for file storage and data applications.

15.13 Demonstration/Development Boards, Evaluation Kits, and Starter Kits

A wide variety of demonstration, development and evaluation boards for various PIC MCUs and dsPIC DSCs allows quick application development on fully functional systems. Most boards include prototyping areas for adding custom circuitry and provide application firmware and source code for examination and modification.

The boards support a variety of features, including LEDs, temperature sensors, switches, speakers, RS-232 interfaces, LCD displays, potentiometers and additional EEPROM memory.

The demonstration and development boards can be used in teaching environments, for prototyping custom circuits and for learning about various microcontroller applications.

In addition to the PICDEM™ and dsPICDEM™ demonstration/development board series of circuits, Microchip has a line of evaluation kits and demonstration software for analog filter design, KEELOQ® security ICs, CAN, IrDA®, PowerSmart battery management, SEEVAL® evaluation system, Sigma-Delta ADC, flow rate sensing, plus many more.

Also available are starter kits that contain everything needed to experience the specified device. This usually includes a single application and debug capability, all on one board.

Check the Microchip web page (www.microchip.com) for the complete list of demonstration, development and evaluation kits.

© 2010 Microchip Technology Inc.

16.0 ELECTRICAL SPECIFICATIONS

Absolute Maximum Ratings(†)

Ambient temperature under bias ..... -40° to +125°C

Storage temperature ..... -65°C to +150°C

Voltage on V_{DD} with respect to V_{SS} ..... -0.3V to +6.5V

Voltage on $\overline{MCLR}$ with respect to Vss ..... -0.3V to +13.5V

Voltage on all other pins with respect to V_{SS} ..... -0.3V to (V_{DD} + 0.3V)

Total power dissipation(1) ..... 800 mW

Maximum current out of V_{SS} pin ..... 95 mA

Maximum current into V_{DD} pin ..... 95 mA

Input clamp current, I_{IK} (V_I < 0 or V_I > V_{DD}) ..... ± 20 mA

Output clamp current, I_{OK} (Vo < 0 or Vo >V_{DD}) ..... ± 20 mA

Maximum output current sunk by any I/O pin ..... 25 mA

Maximum output current sourced by any I/O pin ..... 25 mA

Maximum current sunk by GPIO ..... 90 mA

Maximum current sourced GPIO ..... 90 mA

Note 1: Power dissipation is calculated as follows: $P_{DIS} = V_{DD} \times \{I_{DD} - \sum I_{OH}\} + \sum \{(V_{DD} - V_{OH}) \times I_{OH}\} + \sum(V_{OL} \times I_{OL})$.

† NOTICE: Stresses above those listed under “Absolute Maximum Ratings” may cause permanent damage to the device. This is a stress rating only and functional operation of the device at those or any other conditions above those indicated in the operation listings of this specification is not implied. Exposure above maximum rating conditions for extended periods may affect device reliability.

FIGURE 16-1: PIC12F609/615/617 VOLTAGE-FREQUENCY GRAPH, -40°C ≤ TA ≤ +125°C

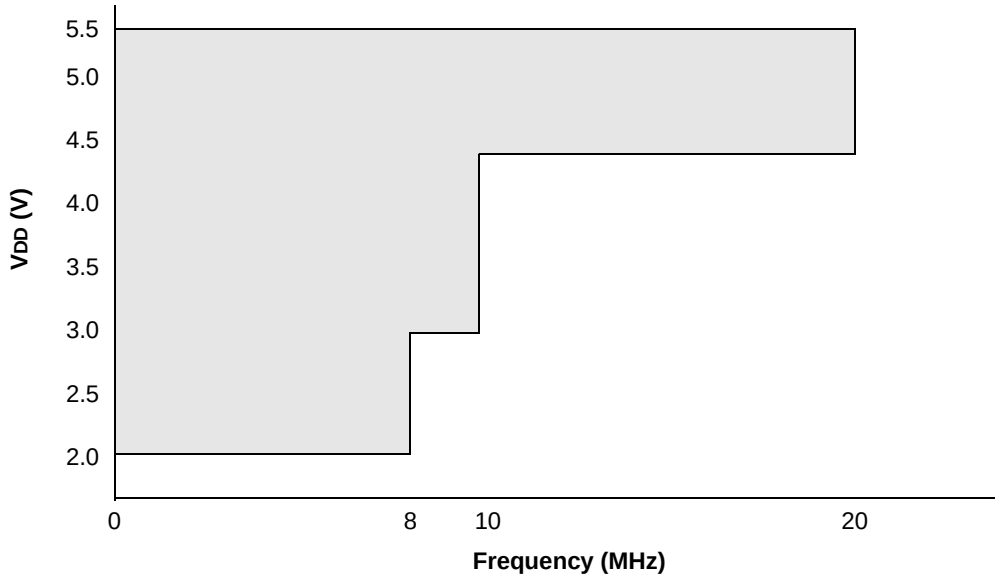

Note 1: The shaded region indicates the permissible combinations of voltage and frequency.

FIGURE 16-2: PIC12HV609/615 VOLTAGE-FREQUENCY GRAPH, -40°C ≤ TA ≤ +125°C

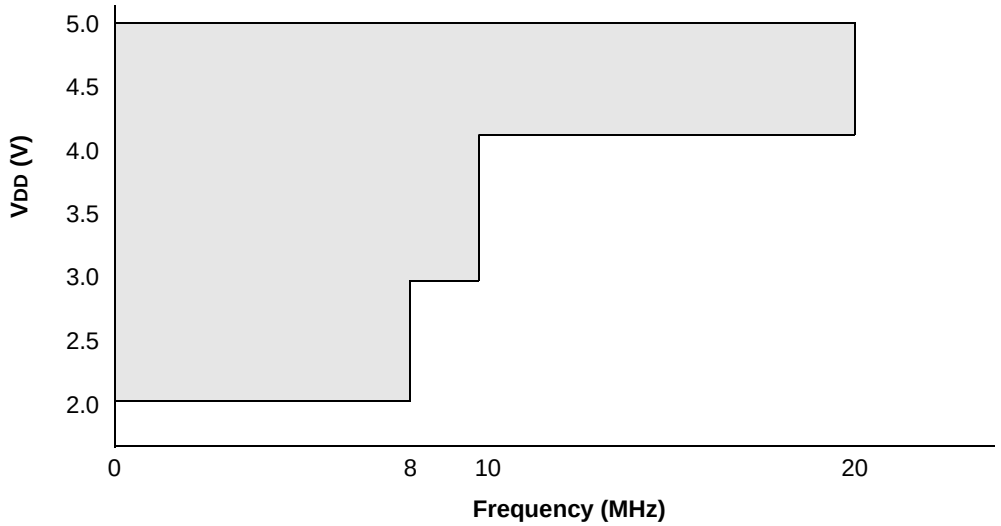

Note 1: The shaded region indicates the permissible combinations of voltage and frequency.

© 2010 Microchip Technology Inc.

16.1 DC Characteristics: PIC12F609/615/617/12HV609/615-I (Industrial) PIC12F609/615/617/12HV609/615-E (Extended)

DC CHARACTERISTICS			Standard Operating Conditions (unless otherwise stated) Operating temperature -40°C ≤ TA ≤ +85°C for industrial -40°C ≤ TA ≤ +125°C for extended				
Param No.	**Sym**	**Characteristic**	**Min**	**Typ†**	**Max**	**Units**	**Conditions**
	VDD	**Supply Voltage**					
D001		PIC12F609/615/617	2.0	—	5.5	V	FOSC < = 4 MHz
D001		PIC12HV609/615	2.0	—	—(2)	V	FOSC < = 4 MHz
D001B		PIC12F609/615/617	2.0	—	5.5	V	FOSC < = 8 MHz
D001B		PIC12HV609/615	2.0	—	—(2)	V	FOSC < = 8 MHz
D001C		PIC12F609/615/617	3.0	—	5.5	V	FOSC < = 10 MHz
D001C		PIC12HV609/615	3.0	—	—(2)	V	FOSC < = 10 MHz
D001D		PIC12F609/615/617	4.5	—	5.5	V	FOSC < = 20 MHz
D001D		PIC12HV609/615	4.5	—	—(2)	V	FOSC < = 20 MHz
D002*	VDR	**RAM Data Retention Voltage(1)**	1.5	—	—	V	Device in Sleep mode
D003	VPOR	**VDD Start Voltage** to ensure internal Power-on Reset signal	—	VSS	—	V	See **Section 12.3.1 “Power-on Reset (POR)”** for details.
D004*	SVDD	**VDD Rise Rate** to ensure internal Power-on Reset signal	0.05	—	—	V/ms	See **Section 12.3.1 “Power-on Reset (POR)”** for details.

* These parameters are characterized but not tested.

† Data in “Typ” column is at 5.0V, 25°C unless otherwise stated. These parameters are for design guidance only and are not tested.

Note 1: This is the limit to which VDD can be lowered in Sleep mode without losing RAM data.

2: User defined. Voltage across the shunt regulator should not exceed 5V.

16.2 DC Characteristics: PIC12F609/615/617-I (Industrial) PIC12F609/615/617-E (Extended)

DC CHARACTERISTICS		Standard Operating Conditions (unless otherwise stated) Operating temperature -40°C ≤ TA ≤ +85°C for industrial -40°C ≤ TA ≤ +125°C for extended					
Param No.	**Device Characteristics**	**Min**	**Typ†**	**Max**	**Units**	**Conditions**	
						VDD	**Note**
D010	**Supply Current (IDD)(1, 2)** PIC12F609/615/617	—	13	25	μA	2.0	FOSC = 32 kHz LP Oscillator mode
		—	19	29	μA	3.0	
		—	32	51	μA	5.0	
D011*		—	135	225	μA	2.0	FOSC = 1 MHz XT Oscillator mode
		—	185	285	μA	3.0	
		—	300	405	μA	5.0	
D012		—	240	360	μA	2.0	FOSC = 4 MHz XT Oscillator mode
		—	360	505	μA	3.0	
		—	0.66	1.0	mA	5.0	
D013*		—	75	110	μA	2.0	FOSC = 1 MHz EC Oscillator mode
		—	155	255	μA	3.0	
		—	345	530	μA	5.0	
D014		—	185	255	μA	2.0	FOSC = 4 MHz EC Oscillator mode
		—	325	475	μA	3.0	
		—	0.665	1.0	mA	5.0	
D016*		—	245	340	μA	2.0	FOSC = 4 MHz INTOSC mode
		—	360	485	μA	3.0	
		—	0.620	0.845	mA	5.0	
D017		—	395	550	μA	2.0	FOSC = 8 MHz INTOSC mode
		—	0.620	0.850	mA	3.0	
		—	1.2	1.6	mA	5.0	
D018		—	175	235	μA	2.0	FOSC = 4 MHz EXTRC mode(3)
		—	285	390	μA	3.0	
		—	530	750	μA	5.0	
D019		—	2.2	3.1	mA	4.5	FOSC = 20 MHz HS Oscillator mode
		—	2.8	3.35	mA	5.0	

* These parameters are characterized but not tested.

† Data in "Typ" column is at 5.0V, 25°C unless otherwise stated. These parameters are for design guidance only and are not tested.

Note 1: The test conditions for all IDD measurements in active operation mode are: OSC1 = external square wave, from rail-to-rail; all I/O pins tri-stated, pulled to VDD; $\overline{MCLR}$ = VDD; WDT disabled.

2: The supply current is mainly a function of the operating voltage and frequency. Other factors, such as I/O pin loading and switching rate, oscillator type, internal code execution pattern and temperature, also have an impact on the current consumption.

3: For RC oscillator configurations, current through REXT is not included. The current through the resistor can be extended by the formula IR = VDD/2REXT (mA) with REXT in KOhms (KΩ).

© 2010 Microchip Technology Inc.

16.3 DC Characteristics: PIC12HV609/615-I (Industrial) PIC12HV609/615-E (Extended)

DC CHARACTERISTICS		Standard Operating Conditions (unless otherwise stated) Operating temperature -40°C ≤ TA ≤ +85°C for industrial -40°C ≤ TA ≤ +125°C for extended					
Param No.	**Device Characteristics**	**Min**	**Typ†**	**Max**	**Units**	**Conditions**	
						VDD	**Note**
D010	**Supply Current (IDD)(1, 2)** PIC12HV609/615	—	160	230	μA	2.0	FOSC = 32 kHz LP Oscillator mode
		—	240	310	μA	3.0	
		—	280	400	μA	4.5	
D011*		—	270	380	μA	2.0	FOSC = 1 MHz XT Oscillator mode
		—	400	560	μA	3.0	
		—	520	780	μA	4.5	
D012		—	380	540	μA	2.0	FOSC = 4 MHz XT Oscillator mode
		—	575	810	μA	3.0	
		—	0.875	1.3	mA	4.5	
D013*		—	215	310	μA	2.0	FOSC = 1 MHz EC Oscillator mode
		—	375	565	μA	3.0	
		—	570	870	μA	4.5	
D014		—	330	475	μA	2.0	FOSC = 4 MHz EC Oscillator mode
		—	550	800	μA	3.0	
		—	0.85	1.2	mA	4.5	
D016*		—	310	435	μA	2.0	FOSC = 4 MHz INTOSC mode
		—	500	700	μA	3.0	
		—	0.74	1.1	mA	4.5	
D017		—	460	650	μA	2.0	FOSC = 8 MHz INTOSC mode
		—	0.75	1.1	mA	3.0	
		—	1.2	1.6	mA	4.5	
D018		—	320	465	μA	2.0	FOSC = 4 MHz EXTRC mode(3)
		—	510	750	μA	3.0	
		—	0.770	1.0	mA	4.5	
D019		—	2.5	3.4	mA	4.5	FOSC = 20 MHz HS Oscillator mode

* These parameters are characterized but not tested.

† Data in “Typ” column is at 4.5V, 25°C unless otherwise stated. These parameters are for design guidance only and are not tested.

Note 1: The test conditions for all IDD measurements in active operation mode are: OSC1 = external square wave, from rail-to-rail; all I/O pins tri-stated, pulled to VDD; $\overline{MCLR}$ = VDD; WDT disabled.

2: The supply current is mainly a function of the operating voltage and frequency. Other factors, such as I/O pin loading and switching rate, oscillator type, internal code execution pattern and temperature, also have an impact on the current consumption.

3: For RC oscillator configurations, current through REXT is not included. The current through the resistor can be extended by the formula IR = VDD/2REXT (mA) with REXT in kΩ.

16.4 DC Characteristics: PIC12F609/615/617 - I (Industrial)

DC CHARACTERISTICS		Standard Operating Conditions (unless otherwise stated) Operating temperature -40°C ≤ TA ≤ +85°C for industrial					
Param No.	**Device Characteristics**	**Min**	**Typ†**	**Max**	**Units**	**Conditions**	
						VDD	**Note**
D020	**Power-down Base Current (IPD)(2)**	—	0.05	0.9	μA	2.0	WDT, BOR, Comparator, VREF and T1OSC disabled
		—	0.15	1.2	μA	3.0	
	PIC12F609/615/617	—	0.35	1.5	μA	5.0	
			150	500	nA	3.0	-40°C ≤ TA ≤ +25°C for industrial
D021		—	0.5	1.5	μA	2.0	WDT Current(1)
		—	2.5	4.0	μA	3.0	
		—	9.5	17	μA	5.0	
D022		—	5.0	9	μA	3.0	BOR Current(1)
		—	6.0	12	μA	5.0	
D023		—	50	60	μA	2.0	Comparator Current(1), single comparator enabled
		—	55	65	μA	3.0	
		—	60	75	μA	5.0	
D024		—	30	40	μA	2.0	CVREF Current(1) (high range)
		—	45	60	μA	3.0	
		—	75	105	μA	5.0	
D025*		—	39	50	μA	2.0	CVREF Current(1) (low range)
		—	59	80	μA	3.0	
		—	98	130	μA	5.0	
D026		—	5.5	10	μA	2.0	T1OSC Current(1), 32.768 kHz
		—	7.0	12	μA	3.0	
		—	8.5	14	μA	5.0	
D027		—	0.2	1.6	μA	3.0	A/D Current(1), no conversion in progress
		—	0.36	1.9	μA	5.0	

* These parameters are characterized but not tested.

† Data in “Typ” column is at 5.0V, 25°C unless otherwise stated. These parameters are for design guidance only and are not tested.

Note 1: The peripheral current is the sum of the base IDD or IPD and the additional current consumed when this peripheral is enabled. The peripheral Δ current can be determined by subtracting the base IDD or IPD current from this limit. Max values should be used when calculating total current consumption.

2: The power-down current in Sleep mode does not depend on the oscillator type. Power-down current is measured with the part in Sleep mode, with all I/O pins in high-impedance state and tied to VDD.

© 2010 Microchip Technology Inc.

16.5 DC Characteristics: PIC12F609/615/617 - E (Extended)

DC CHARACTERISTICS		Standard Operating Conditions (unless otherwise stated) Operating temperature -40°C ≤ TA ≤ +125°C for extended					
Param No.	**Device Characteristics**	**Min**	**Typ†**	**Max**	**Units**	**Conditions**	
						VDD	**Note**
D020E	**Power-down Base Current (IPD)(2)** PIC12F609/615/617	—	0.05	4.0	μA	2.0	WDT, BOR, Comparator, VREF and T1OSC disabled
		—	0.15	5.0	μA	3.0	
		—	0.35	8.5	μA	5.0	
D021E		—	0.5	5.0	μA	2.0	WDT Current(1)
		—	2.5	8.0	μA	3.0	
		—	9.5	19	μA	5.0	
D022E		—	5.0	15	μA	3.0	BOR Current(1)
		—	6.0	19	μA	5.0	
D023E		—	50	70	μA	2.0	Comparator Current(1), single comparator enabled
		—	55	75	μA	3.0	
		—	60	80	μA	5.0	
D024E		—	30	40	μA	2.0	CVREF Current(1) (high range)
		—	45	60	μA	3.0	
		—	75	105	μA	5.0	
D025E*		—	39	50	μA	2.0	CVREF Current(1) (low range)
		—	59	80	μA	3.0	
		—	98	130	μA	5.0	
D026E		—	5.5	16	μA	2.0	T1OSC Current(1), 32.768 kHz
		—	7.0	18	μA	3.0	
		—	8.5	22	μA	5.0	
D027E		—	0.2	6.5	μA	3.0	A/D Current(1), no conversion in progress
		—	0.36	10	μA	5.0	

* These parameters are characterized but not tested.

† Data in “Typ” column is at 5.0V, 25°C unless otherwise stated. These parameters are for design guidance only and are not tested.

Note 1: The peripheral current is the sum of the base IDD or IPD and the additional current consumed when this peripheral is enabled. The peripheral Δ current can be determined by subtracting the base IDD or IPD current from this limit. Max values should be used when calculating total current consumption.

2: The power-down current in Sleep mode does not depend on the oscillator type. Power-down current is measured with the part in Sleep mode, with all I/O pins in high-impedance state and tied to VDD.

16.6 DC Characteristics: PIC12HV609/615 - I (Industrial)

DC CHARACTERISTICS		Standard Operating Conditions (unless otherwise stated) Operating temperature -40°C ≤ TA ≤ +85°C for industrial					
Param No.	**Device Characteristics**	**Min**	**Typ†**	**Max**	**Units**	**Conditions**	
						VDD	**Note**
D020	**Power-down Base Current (IPD)(2,3)**	—	135	200	μA	2.0	WDT, BOR, Comparator, VREF and T1OSC disabled
		—	210	280	μA	3.0	
	PIC12HV609/615	—	260	350	μA	4.5	
D021		—	135	200	μA	2.0	WDT Current(1)
		—	210	285	μA	3.0	
		—	265	360	μA	4.5	
D022		—	215	285	μA	3.0	BOR Current(1)
		—	265	360	μA	4.5	
D023		—	185	270	μA	2.0	Comparator Current(1), single comparator enabled
		—	265	350	μA	3.0	
		—	320	430	μA	4.5	
D024		—	165	235	μA	2.0	CVREF Current(1) (high range)
		—	255	330	μA	3.0	
		—	330	430	μA	4.5	
D025*		—	175	245	μA	2.0	CVREF Current(1) (low range)
		—	275	350	μA	3.0	
		—	355	450	μA	4.5	
D026		—	140	205	μA	2.0	T1OSC Current(1), 32.768 kHz
		—	220	290	μA	3.0	
		—	270	360	μA	4.5	
D027		—	210	280	μA	3.0	A/D Current(1), no conversion in progress
		—	260	350	μA	4.5	

* These parameters are characterized but not tested.

† Data in “Typ” column is at 4.5V, 25°C unless otherwise stated. These parameters are for design guidance only and are not tested.

Note 1: The peripheral current is the sum of the base IDD or IPD and the additional current consumed when this peripheral is enabled. The peripheral Δ current can be determined by subtracting the base IDD or IPD current from this limit. Max values should be used when calculating total current consumption.

2: The power-down current in Sleep mode does not depend on the oscillator type. Power-down current is measured with the part in Sleep mode, with all I/O pins in high-impedance state and tied to VDD.

3: Shunt regulator is always on and always draws operating current.

© 2010 Microchip Technology Inc.

16.7 DC Characteristics: PIC12HV609/615-E (Extended)

DC CHARACTERISTICS		Standard Operating Conditions (unless otherwise stated) Operating temperature -40°C ≤ TA ≤ +125°C for extended					
Param No.	**Device Characteristics**	**Min**	**Typ†**	**Max**	**Units**	**Conditions**	
						VDD	**Note**
D020E	**Power-down Base Current (IPD)(2,3)** PIC12HV609/615	—	135	200	μA	2.0	WDT, BOR, Comparator, VREF and T1OSC disabled
		—	210	280	μA	3.0	
		—	260	350	μA	4.5	
D021E		—	135	200	μA	2.0	WDT Current(1)
		—	210	285	μA	3.0	
		—	265	360	μA	4.5	
D022E		—	215	285	μA	3.0	BOR Current(1)
		—	265	360	μA	4.5	
D023E		—	185	280	μA	2.0	Comparator Current(1), single comparator enabled
		—	265	360	μA	3.0	
		—	320	430	μA	4.5	
D024E		—	165	235	μA	2.0	CVREF Current(1) (high range)
		—	255	330	μA	3.0	
		—	330	430	μA	4.5	
D025E*		—	175	245	μA	2.0	CVREF Current(1) (low range)
		—	275	350	μA	3.0	
		—	355	450	μA	4.5	
D026E		—	140	205	μA	2.0	T1OSC Current(1), 32.768 kHz
		—	220	290	μA	3.0	
		—	270	360	μA	4.5	
D027E		—	210	280	μA	3.0	A/D Current(1), no conversion in progress
		—	260	350	μA	4.5	

* These parameters are characterized but not tested.

† Data in “Typ” column is at 4.5V, 25°C unless otherwise stated. These parameters are for design guidance only and are not tested.

Note 1: The peripheral current is the sum of the base IDD or IPD and the additional current consumed when this peripheral is enabled. The peripheral Δ current can be determined by subtracting the base IDD or IPD current from this limit. Max values should be used when calculating total current consumption.

2: The power-down current in Sleep mode does not depend on the oscillator type. Power-down current is measured with the part in Sleep mode, with all I/O pins in high-impedance state and tied to VDD.

3: Shunt regulator is always on and always draws operating current.

16.8 DC Characteristics: PIC12F609/615/617/12HV609/615-I (Industrial) PIC12F609/615/617/12HV609/615-E (Extended)

DC CHARACTERISTICS			Standard Operating Conditions (unless otherwise stated) Operating temperature -40°C ≤ TA ≤ +85°C for industrial -40°C ≤ TA ≤ +125°C for extended				
Param No.	**Sym**	**Characteristic**	**Min**	**Typ†**	**Max**	**Units**	**Conditions**
	VIL	**Input Low Voltage**					
		I/O port:					
D030		with TTL buffer	Vss	—	0.8	V	4.5V ≤ VDD ≤ 5.5V
D030A			Vss	—	0.15 VDD	V	2.0V ≤ VDD ≤ 4.5V
D031		with Schmitt Trigger buffer	Vss	—	0.2 VDD	V	2.0V ≤ VDD ≤ 5.5V
D032		$\overline{\text{MCLR}}$, OSC1 (RC mode)	VSS	—	0.2 VDD	V	**(NOTE 1)**
D033		OSC1 (XT and LP modes)	VSS	—	0.3	V	
D033A		OSC1 (HS mode)	VSS	—	0.3 VDD	V	
	VIH	**Input High Voltage**					
		I/O ports:		—			
D040		with TTL buffer	2.0	—	VDD	V	4.5V ≤ VDD ≤ 5.5V
D040A			0.25 VDD + 0.8	—	VDD	V	2.0V ≤ VDD ≤ 4.5V
D041		with Schmitt Trigger buffer	0.8 VDD	—	VDD	V	2.0V ≤ VDD ≤ 5.5V
D042		$\overline{\text{MCLR}}$	0.8 VDD	—	VDD	V	
D043		OSC1 (XT and LP modes)	1.6	—	VDD	V	
D043A		OSC1 (HS mode)	0.7 VDD	—	VDD	V	
D043B		OSC1 (RC mode)	0.9 VDD	—	VDD	V	**(NOTE 1)**
	IIL	**Input Leakage Current(2,3)**					
D060		I/O ports	—	± 0.1	± 1	μA	VSS ≤ VPIN ≤ VDD, Pin at high-impedance
D061		GP3/$\overline{\text{MCLR}}$(3,4)	—	± 0.7	± 5	μA	VSS ≤ VPIN ≤ VDD
D063		OSC1	—	± 0.1	± 5	μA	VSS ≤ VPIN ≤ VDD, XT, HS and LP oscillator configuration
D070*	IPUR	**GPIO Weak Pull-up Current(5)**	50	250	400	μA	VDD = 5.0V, VPIN = VSS
	VOL	**Output Low Voltage**	—	—	0.6	V	IOL = 7.0 mA, VDD = 4.5V, -40°C to +125°C
D080		I/O ports	—	—	0.6	V	IOL = 8.5 mA, VDD = 4.5V, -40°C to +85°C
	VOH	**Output High Voltage**	VDD – 0.7	—	—	V	IOH = -2.5mA, VDD = 4.5V, -40°C to +125°C
D090		I/O ports(2)	VDD – 0.7	—	—	V	IOH = -3.0 mA, VDD = 4.5V, -40°C to +85°C

* These parameters are characterized but not tested.

† Data in "Typ" column is at 5.0V, 25°C unless otherwise stated. These parameters are for design guidance only and are not tested.

Note 1: In RC oscillator configuration, the OSC1/CLKIN pin is a Schmitt Trigger input. It is not recommended to use an external clock in RC mode.

2: Negative current is defined as current sourced by the pin.

3: The leakage current on the $\overline{\text{MCLR}}$ pin is strongly dependent on the applied voltage level. The specified levels represent normal operating conditions. Higher leakage current may be measured at different input voltages.

4: This specification applies to GP3/$\overline{\text{MCLR}}$ configured as GP3 with the internal weak pull-up disabled.

5: This specification applies to all weak pull-up pins, including the weak pull-up found on GP3/$\overline{\text{MCLR}}$. When GP3/$\overline{\text{MCLR}}$ is configured as $\overline{\text{MCLR}}$ reset pin, the weak pull-up is always enabled.

6: Applies to PIC12F617 only.

© 2010 Microchip Technology Inc.

16.8 DC Characteristics: PIC12F609/615/617/12HV609/615-I (Industrial) PIC12F609/615/617/12HV609/615-E (Extended) (Continued)

DC CHARACTERISTICS			Standard Operating Conditions (unless otherwise stated) Operating temperature -40°C ≤ TA ≤ +85°C for industrial -40°C ≤ TA ≤ +125°C for extended				
Param No.	**Sym**	**Characteristic**	**Min**	**Typ†**	**Max**	**Units**	**Conditions**
D101*	COSC2	**Capacitive Loading Specs on Output Pins** OSC2 pin	—	—	15	pF	In XT, HS and LP modes when external clock is used to drive OSC1
D101A*	CIO	All I/O pins	—	—	50	pF	
		Program Flash Memory					
D130	EP	Cell Endurance	10K	100K	—	E/W	-40°C ≤ TA ≤ +85°C
D130A	ED	Cell Endurance	1K	10K	—	E/W	+85°C ≤ TA ≤ +125°C
D131	VPR	VDD for Read	VMIN	—	5.5	V	VMIN = Minimum operating voltage
D132	VPEW	VDD for Bulk Erase/Write	4.5	—	5.5	V	
D132A	VPEW	VDD for Row Erase/Write(6)	VMIN	—	5.5	V	
D133	TPEW	Erase/Write cycle time	—	2	2.5	ms	
D134	TRETD	Characteristic Retention	40	—	—	Year	Provided no other specifications are violated

* These parameters are characterized but not tested.

† Data in “Typ” column is at 5.0V, 25°C unless otherwise stated. These parameters are for design guidance only and are not tested.

Note 1: In RC oscillator configuration, the OSC1/CLKIN pin is a Schmitt Trigger input. It is not recommended to use an external clock in RC mode.

2: Negative current is defined as current sourced by the pin.

3: The leakage current on the $\overline{\text{MCLR}}$ pin is strongly dependent on the applied voltage level. The specified levels represent normal operating conditions. Higher leakage current may be measured at different input voltages.

4: This specification applies to GP3/$\overline{\text{MCLR}}$ configured as GP3 with the internal weak pull-up disabled.

5: This specification applies to all weak pull-up pins, including the weak pull-up found on GP3/$\overline{\text{MCLR}}$. When GP3/$\overline{\text{MCLR}}$ is configured as $\overline{\text{MCLR}}$ reset pin, the weak pull-up is always enabled.

6: Applies to PIC12F617 only.

16.9 Thermal Considerations

Standard Operating Conditions (unless otherwise stated) Operating temperature -40°C ≤ TA ≤ +125°C					
Param No.	**Sym**	**Characteristic**	**Typ**	**Units**	**Conditions**
TH01	θJA	Thermal Resistance Junction to Ambient	84.6*	C/W	8-pin PDIP package
			149.5*	C/W	8-pin SOIC package
			211*	C/W	8-pin MSOP package
			60*	C/W	8-pin DFN 3x3mm package
			44*	C/W	8-pin DFN 4x4mm package
TH02	θJC	Thermal Resistance Junction to Case	41.2*	C/W	8-pin PDIP package
			39.9*	C/W	8-pin SOIC package
			39*	C/W	8-pin MSOP package
			9*	C/W	8-pin DFN 3x3mm package
			3.0*	C/W	8-pin DFN 4x4mm package
TH03	TDIE	Die Temperature	150*	C	
TH04	PD	Power Dissipation	—	W	PD = PINTERNAL + PI/O
TH05	PINTERNAL	Internal Power Dissipation	—	W	PINTERNAL = IDD x VDD **(NOTE 1)**
TH06	PI/O	I/O Power Dissipation	—	W	PI/O = Σ (IOL * VOL) + Σ (IOH * (VDD - VOH))
TH07	PDER	Derated Power	—	W	PDER = PDMAX (TDIE - TA)/θJA **(NOTE 2)**

* These parameters are characterized but not tested.

Note 1: IDD is current to run the chip alone without driving any load on the output pins.

2: T_A = Ambient temperature.

© 2010 Microchip Technology Inc.

16.10 Timing Parameter Symbology

The timing parameter symbols have been created with one of the following formats:

1. TppS2ppS
2. TppS

T			
F	Frequency	T	Time

Lowercase letters (pp) and their meanings:

pp			
cc	CCP1	osc	OSC1
ck	CLKOUT	rd	$\overline{\text{RD}}$
cs	$\overline{\text{CS}}$	rw	$\overline{\text{RD}}$ or $\overline{\text{WR}}$
di	SDI	sc	SCK
do	SDO	ss	$\overline{\text{SS}}$
dt	Data in	t0	T0CKI
io	I/O Port	t1	T1CKI
mc	$\overline{\text{MCLR}}$	wr	$\overline{\text{WR}}$

Uppercase letters and their meanings:

S			
F	Fall	P	Period
H	High	R	Rise
I	Invalid (High-impedance)	V	Valid
L	Low	Z	High-impedance

FIGURE 16-3: LOAD CONDITIONS

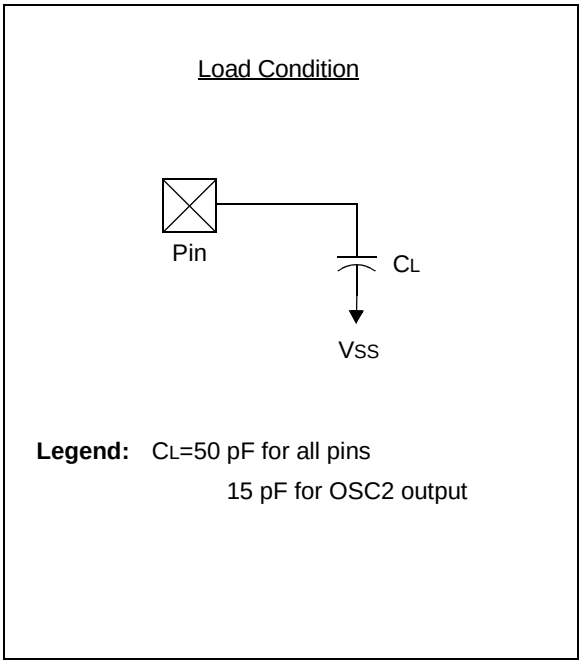

16.11 AC Characteristics: PIC12F609/615/617/12HV609/615 (Industrial, Extended)

FIGURE 16-4: CLOCK TIMING

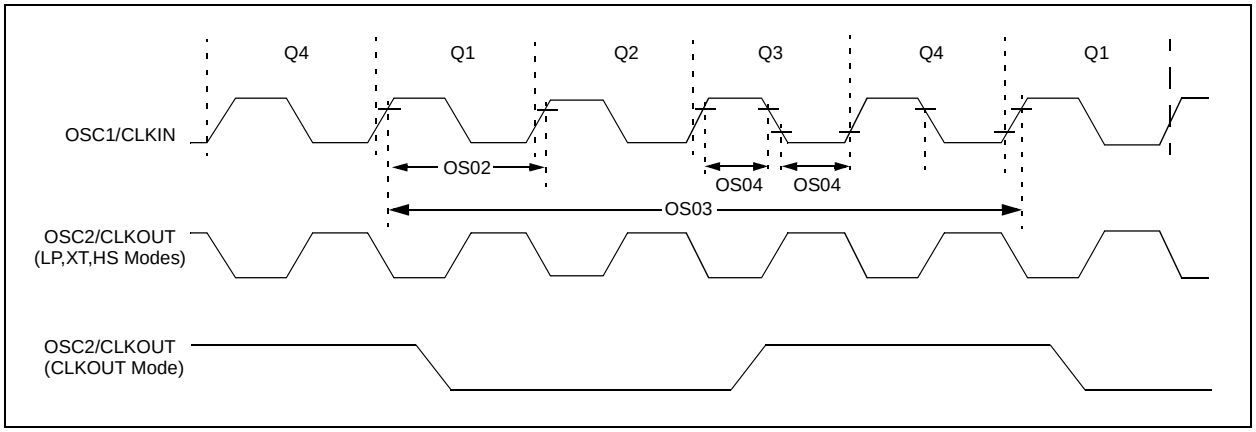

TABLE 16-1: CLOCK OSCILLATOR TIMING REQUIREMENTS

Standard Operating Conditions (unless otherwise stated)
Operating temperature -40°C ≤ TA ≤ +125°C

Param No.	Sym	Characteristic	Min	Typ†	Max	Units	Conditions
OS01	FOSC	External CLKIN Frequency(1)	DC	—	37	kHz	LP Oscillator mode
			DC	—	4	MHz	XT Oscillator mode
			DC	—	20	MHz	HS Oscillator mode
			DC	—	20	MHz	EC Oscillator mode
		Oscillator Frequency(1)	—	32.768	—	kHz	LP Oscillator mode
			0.1	—	4	MHz	XT Oscillator mode
			1	—	20	MHz	HS Oscillator mode
			DC	—	4	MHz	RC Oscillator mode
OS02	TOSC	External CLKIN Period(1)	27	—	∞	μs	LP Oscillator mode
			250	—	∞	ns	XT Oscillator mode
			50	—	∞	ns	HS Oscillator mode
			50	—	∞	ns	EC Oscillator mode
		Oscillator Period(1)	—	30.5	—	μs	LP Oscillator mode
			250	—	10,000	ns	XT Oscillator mode
			50	—	1,000	ns	HS Oscillator mode
			250	—	—	ns	RC Oscillator mode
OS03	TCY	Instruction Cycle Time(1)	200	TCY	DC	ns	TCY = 4/FOSC
OS04*	TOSH, TOSL	External CLKIN High, External CLKIN Low	2	—	—	μs	LP oscillator
			100	—	—	ns	XT oscillator
			20	—	—	ns	HS oscillator
OS05*	TOSR, TOSF	External CLKIN Rise, External CLKIN Fall	0	—	∞	ns	LP oscillator
			0	—	∞	ns	XT oscillator
			0	—	∞	ns	HS oscillator

* These parameters are characterized but not tested.

† Data in “Typ” column is at 5V, 25°C unless otherwise stated. These parameters are for design guidance only and are not tested.

Note 1: Instruction cycle period (TCY) equals four times the input oscillator time base period. All specified values are based on characterization data for that particular oscillator type under standard operating conditions with the device executing code. Exceeding these specified limits may result in an unstable oscillator operation and/or higher than expected current consumption. All devices are tested to operate at “min” values with an external clock applied to OSC1 pin. When an external clock input is used, the “max” cycle time limit is “DC” (no clock) for all devices.

© 2010 Microchip Technology Inc.

TABLE 16-2: OSCILLATOR PARAMETERS

Standard Operating Conditions (unless otherwise stated)
Operating Temperature -40°C ≤ TA ≤ +125°C

Param No.	Sym	Characteristic	Freq. Tolerance	Min	Typ†	Max	Units	Conditions
OS06	TWARM	Internal Oscillator Switch when running(3)	—	—	—	2	TOSC	Slowest clock
OS07	INTOSC	Internal Calibrated INTOSC Frequency(2) (4MHz)	±1%	3.96	4.0	4.04	MHz	VDD = 3.5V, T_A = 25°C
			±2%	3.92	4.0	4.08	MHz	2.5V ≤ VDD ≤ 5.5V, 0°C ≤ TA ≤ +85°C
			±5%	3.80	4.0	4.2	MHz	2.0V ≤ VDD ≤ 5.5V, -40°C ≤ TA ≤ +85°C (Ind.), -40°C ≤ TA ≤ +125°C (Ext.)
OS08	INTOSC	Internal Calibrated INTOSC Frequency(2) (8MHz)	±1%	7.92	8.0	8.08	MHz	VDD = 3.5V, T_A = 25°C
			±2%	7.84	8.0	8.16	MHz	2.5V ≤ VDD ≤ 5.5V, 0°C ≤ TA ≤ +85°C
			±5%	7.60	8.0	8.40	MHz	2.0V ≤ VDD ≤ 5.5V, -40°C ≤ TA ≤ +85°C (Ind.), -40°C ≤ TA ≤ +125°C (Ext.)
OS10*	TIOSC ST	INTOSC Oscillator Wake-up from Sleep Start-up Time	—	5.5	12	24	μs	VDD = 2.0V, -40°C to +85°C
			—	3.5	7	14	μs	VDD = 3.0V, -40°C to +85°C
			—	3	6	11	μs	VDD = 5.0V, -40°C to +85°C

* These parameters are characterized but not tested.

† Data in “Typ” column is at 5.0V, 25°C unless otherwise stated. These parameters are for design guidance only and are not tested.

Note 1: Instruction cycle period (TCY) equals four times the input oscillator time base period. All specified values are based on characterization data for that particular oscillator type under standard operating conditions with the device executing code. Exceeding these specified limits may result in an unstable oscillator operation and/or higher than expected current consumption. All devices are tested to operate at “min” values with an external clock applied to the OSC1 pin. When an external clock input is used, the “max” cycle time limit is “DC” (no clock) for all devices.

2: To ensure these oscillator frequency tolerances, VDD and VSS must be capacitively decoupled as close to the device as possible. 0.1 μF and 0.01 μF values in parallel are recommended.

3: By design.

FIGURE 16-5: CLKOUT AND I/O TIMING

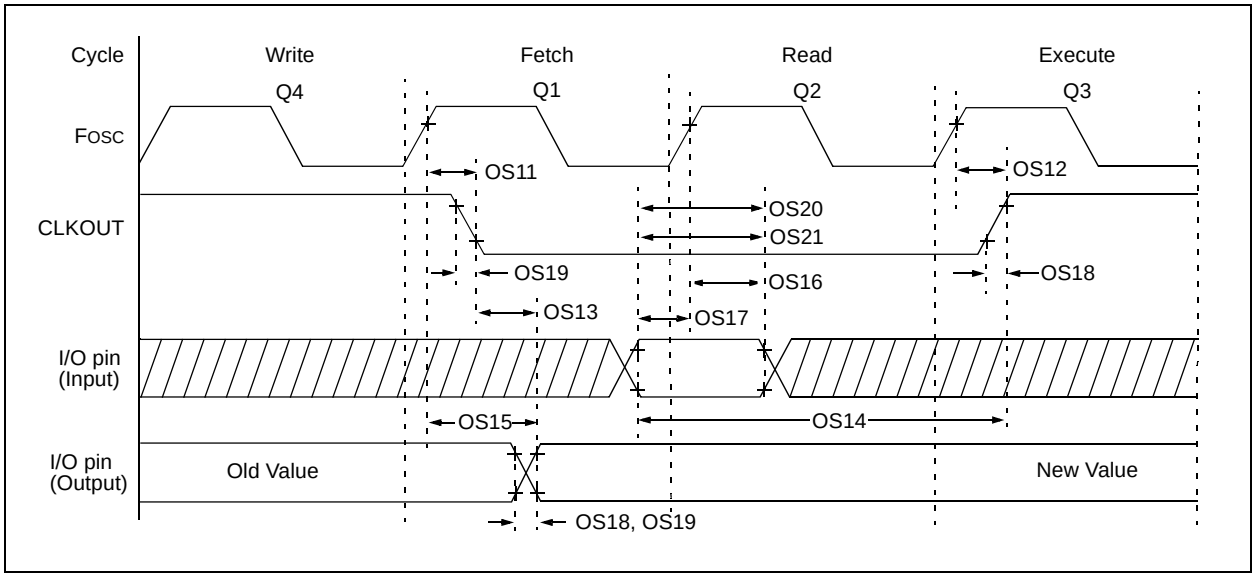

TABLE 16-3: CLKOUT AND I/O TIMING PARAMETERS

Standard Operating Conditions (unless otherwise stated) Operating Temperature -40°C ≤ TA ≤ +125°C							
Param No.	**Sym**	**Characteristic**	**Min**	**Typ†**	**Max**	**Units**	**Conditions**
OS11	TOSH2CKL	FOSC↑ to CLKOUT↓ (1)	—	—	70	ns	VDD = 5.0V
OS12	TOSH2CKH	FOSC↑ to CLKOUT↑ (1)	—	—	72	ns	VDD = 5.0V
OS13	TCKL2IOV	CLKOUT↓ to Port out valid(1)	—	—	20	ns	
OS14	TIOV2CKH	Port input valid before CLKOUT↑(1)	TOSC + 200 ns	—	—	ns	
OS15	TOSH2IOV	FOSC↑ (Q1 cycle) to Port out valid	—	50	70*	ns	VDD = 5.0V
OS16	TOSH2IOI	FOSC↑ (Q2 cycle) to Port input invalid (I/O in hold time)	50	—	—	ns	VDD = 5.0V
OS17	TIOV2OSH	Port input valid to FOSC↑ (Q2 cycle) (I/O in setup time)	20	—	—	ns	
OS18	TIOR	Port output rise time(2)	— —	15 40	72 32	ns	VDD = 2.0V VDD = 5.0V
OS19	TIOF	Port output fall time(2)	— —	28 15	55 30	ns	VDD = 2.0V VDD = 5.0V
OS20*	TINP	INT pin input high or low time	25	—	—	ns	
OS21*	TRAP	GPIO interrupt-on-change new input level time	TCY	—	—	ns	

* These parameters are characterized but not tested.

† Data in “Typ” column is at 5.0V, 25°C unless otherwise stated.

Note 1: Measurements are taken in RC mode where CLKOUT output is 4 x TOSC.

2: Includes OSC2 in CLKOUT mode.

© 2010 Microchip Technology Inc.

FIGURE 16-6: RESET, WATCHDOG TIMER, OSCILLATOR START-UP TIMER AND POWER-UP TIMER TIMING

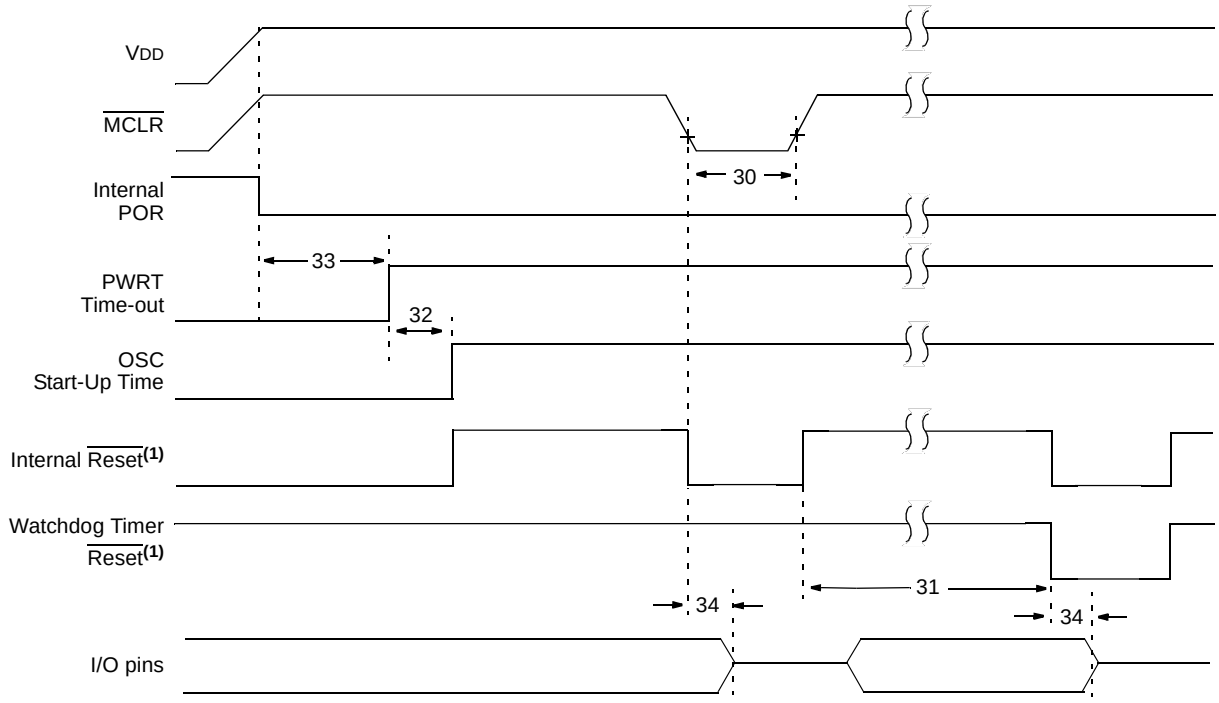

Note 1: Asserted low.

FIGURE 16-7: BROWN-OUT RESET TIMING AND CHARACTERISTICS

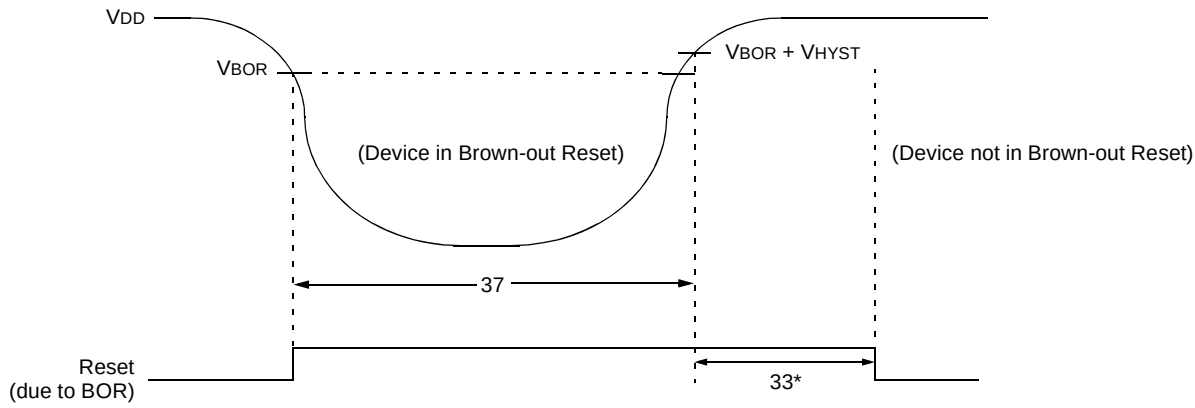

* 64 ms delay only if $\overline{\text{PWRTE}}$ bit in the Configuration Word register is programmed to '0'.

TABLE 16-4: RESET, WATCHDOG TIMER, OSCILLATOR START-UP TIMER, POWER-UP TIMER AND BROWN-OUT RESET PARAMETERS

Standard Operating Conditions (unless otherwise stated) Operating Temperature -40°C ≤ TA ≤ +125°C							
Param No.	**Sym**	**Characteristic**	**Min**	**Typ†**	**Max**	**Units**	**Conditions**
30	TMCL	$\overline{\text{MCLR}}$ Pulse Width (low)	2 5	— —	— —	μs μs	VDD = 5V, -40°C to +85°C VDD = 5V, -40°C to +125°C
31*	TWDT	Watchdog Timer Time-out Period (No Prescaler)	10 10	20 20	30 35	ms ms	VDD = 5V, -40°C to +85°C VDD = 5V, -40°C to +125°C
32	TOST	Oscillation Start-up Timer Period(1, 2)	—	1024	—	TOSC	**(NOTE 3)**
33*	TPWRT	Power-up Timer Period	40	65	140	ms	
34*	TIOZ	I/O High-impedance from $\overline{\text{MCLR}}$ Low or Watchdog Timer Reset	—	—	2.0	μs	
35	VBOR	Brown-out Reset Voltage	2.0	2.15	2.3	V	**(NOTE 4)**
36*	VHYST	Brown-out Reset Hysteresis	—	100	—	mV	
37*	TBOR	Brown-out Reset Minimum Detection Period	100	—	—	μs	VDD ≤ VBOR

* These parameters are characterized but not tested.

† Data in “Typ” column is at 5V, 25°C unless otherwise stated. These parameters are for design guidance only and are not tested.

Note 1: Instruction cycle period (TCY) equals four times the input oscillator time base period. All specified values are based on characterization data for that particular oscillator type under standard operating conditions with the device executing code. Exceeding these specified limits may result in an unstable oscillator operation and/or higher than expected current consumption. All devices are tested to operate at “min” values with an external clock applied to the OSC1 pin. When an external clock input is used, the “max” cycle time limit is “DC” (no clock) for all devices.

2: By design.

3: Period of the slower clock.

4: To ensure these voltage tolerances, VDD and VSS must be capacitively decoupled as close to the device as possible. 0.1 μF and 0.01 μF values in parallel are recommended.

© 2010 Microchip Technology Inc.

FIGURE 16-8: TIMER0 AND TIMER1 EXTERNAL CLOCK TIMINGS

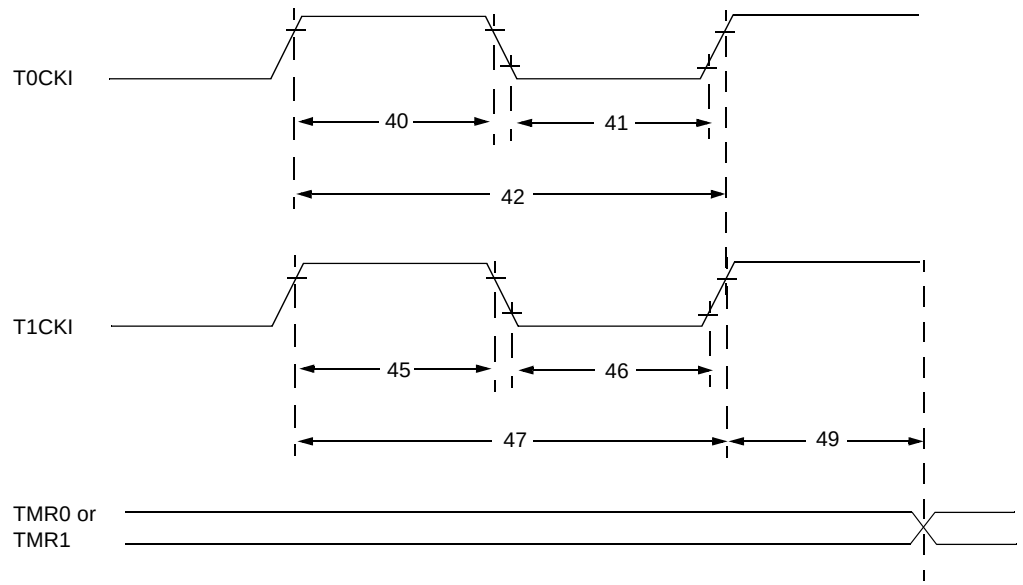

TABLE 16-5: TIMER0 AND TIMER1 EXTERNAL CLOCK REQUIREMENTS

Standard Operating Conditions (unless otherwise stated)
Operating Temperature -40°C ≤ TA ≤ +125°C

Param No.	Sym	Characteristic		Min	Typ†	Max	Units	Conditions
40*	TT0H	T0CKI High Pulse Width	No Prescaler	0.5 TCY + 20	—	—	ns	
			With Prescaler	10	—	—	ns	
41*	TT0L	T0CKI Low Pulse Width	No Prescaler	0.5 TCY + 20	—	—	ns	
			With Prescaler	10	—	—	ns	
42*	TT0P	T0CKI Period		Greater of: 20 or TCY + 40 / N	—	—	ns	N = prescale value (2, 4, ..., 256)
45*	TT1H	T1CKI High Time	Synchronous, No Prescaler	0.5 TCY + 20	—	—	ns	
			Synchronous, with Prescaler	15	—	—	ns	
			Asynchronous	30	—	—	ns	
46*	TT1L	T1CKI Low Time	Synchronous, No Prescaler	0.5 TCY + 20	—	—	ns	
			Synchronous, with Prescaler	15	—	—	ns	
			Asynchronous	30	—	—	ns	
47*	TT1P	T1CKI Input Period	Synchronous	Greater of: 30 or TCY + 40 / N	—	—	ns	N = prescale value (1, 2, 4, 8)
			Asynchronous	60	—	—	ns	
48	FT1	Timer1 Oscillator Input Frequency Range (oscillator enabled by setting bit T1OSCEN)		—	32.768	—	kHz	
49*	TCKEZTMR1	Delay from External Clock Edge to Timer Increment		2 TOSC	—	7 TOSC	—	Timers in Sync mode

* These parameters are characterized but not tested.

† Data in “Typ” column is at 5V, 25°C unless otherwise stated. These parameters are for design guidance only and are not tested.

FIGURE 16-9: PIC12F615/617/HV615 CAPTURE/COMPARE/PWM TIMINGS (ECCP)

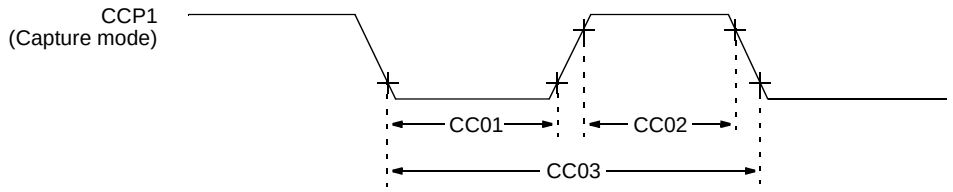

Note: Refer to Figure 16-3 for load conditions.

TABLE 16-6: PIC12F615/617/HV615 CAPTURE/COMPARE/PWM REQUIREMENTS (ECCP)

Standard Operating Conditions (unless otherwise stated)
Operating Temperature -40°C ≤ TA ≤ +125°C

Param No.	Sym	Characteristic		Min	Typ†	Max	Units	Conditions
CC01*	TccL	CCP1 Input Low Time	No Prescaler	0.5TCY + 20	—	—	ns	
			With Prescaler	20	—	—	ns	
CC02*	TccH	CCP1 Input High Time	No Prescaler	0.5TCY + 20	—	—	ns	
			With Prescaler	20	—	—	ns	
CC03*	TccP	CCP1 Input Period		3TCY + 40 / N	—	—	ns	N = prescale value (1, 4 or 16)

* These parameters are characterized but not tested.

† Data in “Typ” column is at 5V, 25°C unless otherwise stated. These parameters are for design guidance only and are not tested.

TABLE 16-7: COMPARATOR SPECIFICATIONS

Standard Operating Conditions (unless otherwise stated)
Operating Temperature -40°C ≤ TA ≤ +125°C

Param No.	Sym	Characteristics		Min	Typ†	Max	Units	Comments
CM01	VOS	Input Offset Voltage(2)		—	± 5.0	± 10	mV	
CM02	VCM	Input Common Mode Voltage		0	—	VDD – 1.5	V	
CM03*	CMRR	Common Mode Rejection Ratio		+55	—	—	dB	
CM04*	TRT	Response Time(1)	Falling	—	150	600	ns	
			Rising	—	200	1000	ns	
CM05*	TMC2COV	Comparator Mode Change to Output Valid		—	—	10	µs	
CM06*	VHYS	Input Hysteresis Voltage		—	45	60	mV	

* These parameters are characterized but not tested.

† Data in “Typ” column is at 5V, 25°C unless otherwise stated. These parameters are for design guidance only and are not tested.

Note 1: Response time is measured with one comparator input at (VDD - 1.5)/2 - 100 mV to (VDD - 1.5)/2 + 20 mV. The other input is at (VDD -1.5)/2.

2: Input offset voltage is measured with one comparator input at (VDD - 1.5V)/2.

© 2010 Microchip Technology Inc.

TABLE 16-8: COMPARATOR VOLTAGE REFERENCE (CVREF) SPECIFICATIONS

Standard Operating Conditions (unless otherwise stated) Operating temperature -40°C ≤ TA ≤ +125°C							
Param No.	**Sym**	**Characteristics**	**Min**	**Typ†**	**Max**	**Units**	**Comments**
CV01*	CLSB	Step Size(2)	— —	VDD/24 VDD/32	— —	V V	Low Range (VRR = 1) High Range (VRR = 0)
CV02*	CACC	Absolute Accuracy(3)	— —	— —	± 1/2 ± 1/2	LSb LSb	Low Range (VRR = 1) High Range (VRR = 0)
CV03*	CR	Unit Resistor Value (R)	—	2k	—	Ω	
CV04*	CST	Settling Time(1)	—	—	10	μs	

* These parameters are characterized but not tested.

† Data in "Typ" column is at 5V, 25°C unless otherwise stated. These parameters are for design guidance only and are not tested.

Note 1: Settling time measured while VRR = 1 and VR<3:0> transitions from '0000' to '1111'.

2: See **Section 9.10 "Comparator Voltage Reference"** for more information.

3: Absolute Accuracy when CVREF output is ≤ (VDD -1.5).

TABLE 16-9: VOLTAGE REFERENCE SPECIFICATIONS

VR Voltage Reference Specifications			Standard Operating Conditions (unless otherwise stated) Operating temperature -40°C ≤ TA ≤ +125°C				
Param No.	**Symbol**	**Characteristics**	**Min**	**Typ**	**Max**	**Units**	**Comments**
VR01	VP6OUT	VP6 voltage output	0.5	0.6	0.7	V	
VR02	V1P2OUT	V1P2 voltage output	1.05	1.20	1.35	V	
VR03*	TSTABLE	Settling Time	—	10	—	μs	

* These parameters are characterized but not tested.

TABLE 16-10: SHUNT REGULATOR SPECIFICATIONS (PIC12HV609/615 only)

SHUNT REGULATOR CHARACTERISTICS			Standard Operating Conditions (unless otherwise stated) Operating temperature -40°C ≤ TA ≤ +125°C				
Param No.	**Symbol**	**Characteristics**	**Min**	**Typ**	**Max**	**Units**	**Comments**
SR01	VSHUNT	Shunt Voltage	4.75	5	5.4	V	
SR02	ISHUNT	Shunt Current	4	—	50	mA	
SR03*	TSETTLE	Settling Time	—	—	150	ns	To 1% of final value
SR04	CLOAD	Load Capacitance	0.01	—	10	μF	Bypass capacitor on VDD pin
SR05	ΔISNT	Regulator operating current	—	180	—	μA	Includes band gap reference current

* These parameters are characterized but not tested.

TABLE 16-11: PIC12F615/617/HV615 A/D CONVERTER (ADC) CHARACTERISTICS:

Standard Operating Conditions (unless otherwise stated) Operating temperature -40°C ≤ TA ≤ +125°C							
Param No.	**Sym**	**Characteristic**	**Min**	**Typ†**	**Max**	**Units**	**Conditions**
AD01	NR	Resolution	—	—	10 bits	bit	
AD02	EIL	Integral Error	—	—	±1	LSb	VREF = 5.12V(5)
AD03	EDL	Differential Error	—	—	±1	LSb	No missing codes to 10 bits VREF = 5.12V(5)
AD04	EOFF	Offset Error	—	+1.5	+2.0	LSb	VREF = 5.12V(5)
AD07	EGN	Gain Error	—	—	±1	LSb	VREF = 5.12V(5)
AD06 AD06A	VREF	Reference Voltage(3)	2.2 2.5	—	— VDD	V	 Absolute minimum to ensure 1 LSb accuracy
AD07	VAIN	Full-Scale Range	VSS	—	VREF	V	
AD08	ZAIN	Recommended Impedance of Analog Voltage Source	—	—	10	kΩ	
AD09*	IREF	VREF Input Current(3)	10	—	1000	μA	During VAIN acquisition. Based on differential of VHOLD to VAIN.
			—	—	50	μA	During A/D conversion cycle.

* These parameters are characterized but not tested.

† Data in “Typ” column is at 5.0V, 25°C unless otherwise stated. These parameters are for design guidance only and are not tested.

Note 1: Total Absolute Error includes integral, differential, offset and gain errors.

2: The A/D conversion result never decreases with an increase in the input voltage and has no missing codes.

3: ADC VREF is from external VREF or VDD pin, whichever is selected as reference input.

4: When ADC is off, it will not consume any current other than leakage current. The power-down current specification includes any such leakage from the ADC module.

5: VREF = 5V for PIC12HV615.

© 2010 Microchip Technology Inc.

TABLE 16-12: PIC12F615/617/HV615 A/D CONVERSION REQUIREMENTS

Standard Operating Conditions (unless otherwise stated) Operating temperature -40°C ≤ TA ≤ +125°C							
Param No.	**Sym**	**Characteristic**	**Min**	**Typ†**	**Max**	**Units**	**Conditions**
AD130*	TAD	A/D Clock Period	1.6	—	9.0	μs	TOSC-based, VREF ≥ 3.0V
			3.0	—	9.0	μs	TOSC-based, VREF full range(3)
		A/D Internal RC Oscillator Period	3.0	6.0	9.0	μs	ADCS<1:0> = 11 (ADRC mode) At VDD = 2.5V
			1.6	4.0	6.0	μs	At VDD = 5.0V
AD131	TCNV	Conversion Time (not including Acquisition Time)(1)	—	11	—	TAD	Set GO/$\overline{\text{DONE}}$ bit to new data in A/D Result register
AD132*	TACQ	Acquisition Time		11.5	—	μs	
AD133*	TAMP	Amplifier Settling Time	—	—	5	μs	
AD134	TGO	Q4 to A/D Clock Start	—	TOSC/2	—	—	
			—	TOSC/2 + TCY	—	—	If the A/D clock source is selected as RC, a time of TCY is added before the A/D clock starts. This allows the SLEEP instruction to be executed.

* These parameters are characterized but not tested.

† Data in "Typ" column is at 5.0V, 25°C unless otherwise stated. These parameters are for design guidance only and are not tested.

Note 1: ADRESH and ADRESL registers may be read on the following TCY cycle.

2: See **Section 10.3 "A/D Acquisition Requirements"** for minimum conditions.

3: Full range for PIC12HV609/HV615 powered by the shunt regulator is the 5V regulated voltage.

FIGURE 16-10: PIC12F615/617/HV615 A/D CONVERSION TIMING (NORMAL MODE)

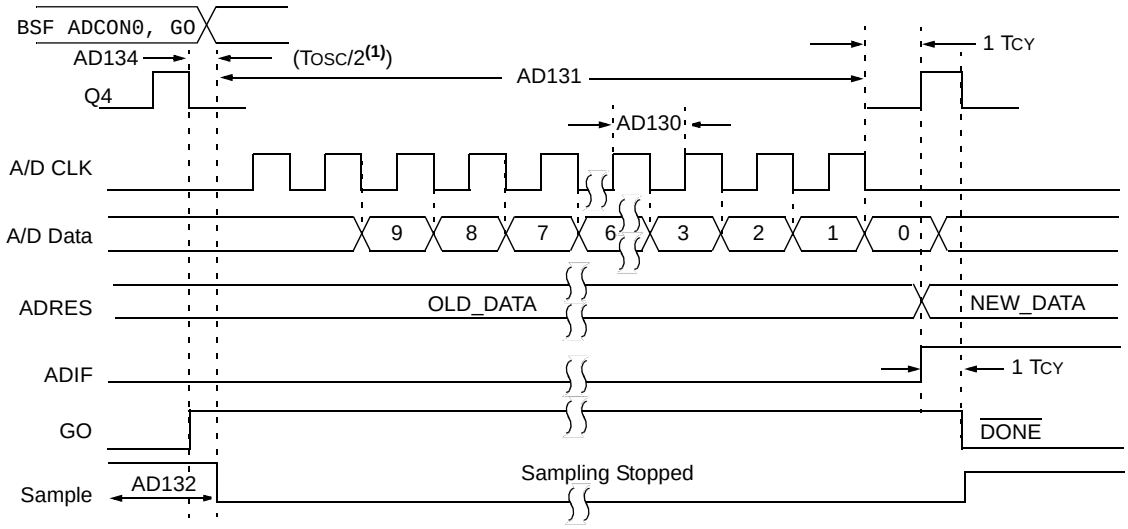

Note 1: If the A/D clock source is selected as RC, a time of TCY is added before the A/D clock starts. This allows the SLEEP instruction to be executed.

FIGURE 16-11: PIC12F615/617/HV615 A/D CONVERSION TIMING (SLEEP MODE)

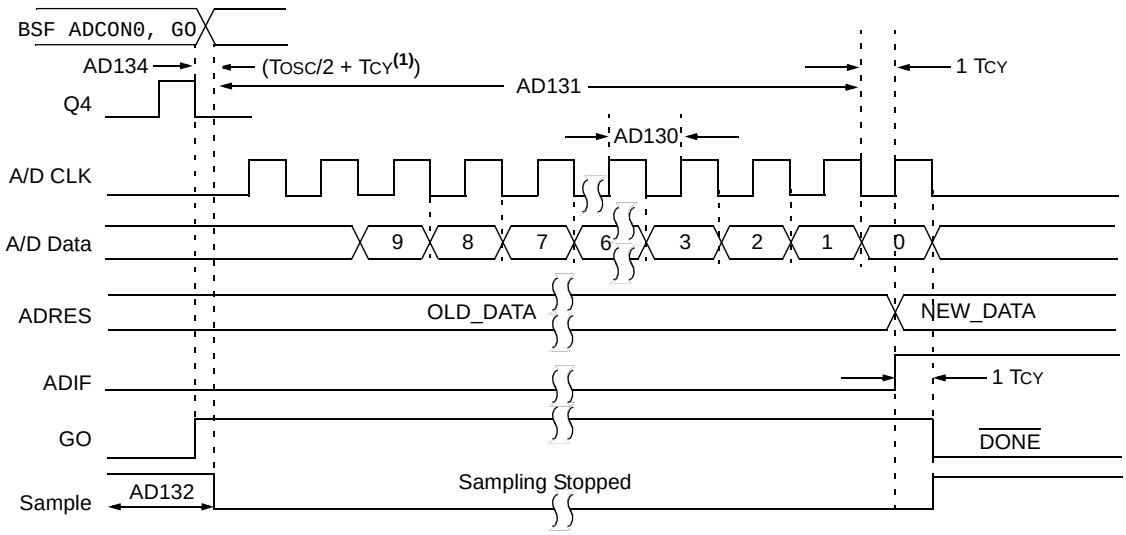

Note 1: If the A/D clock source is selected as RC, a time of TCY is added before the A/D clock starts. This allows the SLEEP instruction to be executed.

© 2010 Microchip Technology Inc.

16.12 High Temperature Operation

This section outlines the specifications for the PIC12F615 device operating in a temperature range between -40°C and 150°C.(4) The specifications between -40°C and 150°C(4) are identical to those shown in DS41288 and DS80329.

Note 1: Writes are **not allowed** for Flash Program Memory above 125°C.

2: All AC timing specifications are increased by 30%. This derating factor will include parameters such as TPWRT.

3: The temperature range indicator in the part number is "H" for -40°C to 150°C.(4)

Example: PIC12F615T-H/ST indicates the device is shipped in a TAPE and reel configuration, in the MSOP package, and is rated for operation from -40°C to 150°C.(4)

4: AEC-Q100 reliability testing for devices intended to operate at 150°C is 1,000 hours. Any design in which the total operating time from 125°C to 150°C will be greater than 1,000 hours is not warranted without prior written approval from Microchip Technology Inc.

TABLE 16-13: ABSOLUTE MAXIMUM RATINGS

Parameter	Source/Sink	Value	Units
Max. Current: VDD	Source	20	mA
Max. Current: VSS	Sink	50	mA
Max. Current: PIN	Source	5	mA
Max. Current: PIN	Sink	10	mA
Pin Current: at VOH	Source	3	mA
Pin Current: at VOL	Sink	8.5	mA
Port Current: GPIO	Source	20	mA
Port Current: GPIO	Sink	50	mA
Maximum Junction Temperature		155	°C

Note: Stresses above those listed under *Absolute Maximum Ratings* may cause permanent damage to the device. This is a stress rating only, and functional operation of the device at those or any other conditions above those indicated in the operation listings of this specification is not implied. Exposure above maximum rating conditions for extended periods may affect device reliability.

TABLE 16-14: DC CHARACTERISTICS FOR IDD SPECIFICATIONS FOR PIC12F615-H (High Temp.)

Param No.	Device Characteristics	Units	Min	Typ	Max	Condition	
						VDD	Note
D010	Supply Current (IDD)	μA	—	13	58	2.0	IDD LP OSC (32 kHz)
			—	19	67	3.0	
			—	32	92	5.0	
D011		μA	—	135	316	2.0	IDD XT OSC (1 MHz)
			—	185	400	3.0	
			—	300	537	5.0	
D012		μA	—	240	495	2.0	IDD XT OSC (4 MHz)
			—	360	680	3.0	
		mA	—	0.660	1.20	5.0	
D013		μA	—	75	158	2.0	IDD EC OSC (1 MHz)
			—	155	338	3.0	
			—	345	792	5.0	
D014		μA	—	185	357	2.0	IDD EC OSC (4 MHz)
			—	325	625	3.0	
		mA	—	0.665	1.30	5.0	
D016		μA	—	245	476	2.0	IDD INTOSC (4 MHz)
			—	360	672	3.0	
			—	620	1.10	5.0	
D017		μA	—	395	757	2.0	IDD INTOSC (8 MHz)
		mA	—	0.620	1.20	3.0	
			—	1.20	2.20	5.0	
D018		μA	—	175	332	2.0	IDD EXTRC (4 MHz)
			—	285	518	3.0	
			—	530	972	5.0	
D019		mA	—	2.20	4.10	4.5	IDD HS OSC (20 MHz)
			—	2.80	4.80	5.0	

© 2010 Microchip Technology Inc.

TABLE 16-15: DC CHARACTERISTICS FOR IPD SPECIFICATIONS FOR PIC12F615-H (High Temp.)

Param No.	Device Characteristics	Units	Min	Typ	Max	Condition	
						VDD	Note
D020E	Power Down Base Current	μA	—	0.05	12	2.0	IPD Base
			—	0.15	13	3.0	
			—	0.35	14	5.0	
D021E		μA	—	0.5	20	2.0	WDT Current
			—	2.5	25	3.0	
			—	9.5	36	5.0	
D022E		μA	—	5.0	28	3.0	BOR Current
			—	6.0	36	5.0	
D023E		μA	—	105	195	2.0	IPD Current (Both Comparators Enabled)
			—	110	210	3.0	
			—	116	220	5.0	
		μA	—	50	105	2.0	IPD Current (One Comparator Enabled)
			—	55	110	3.0	
			—	60	125	5.0	
D024E		μA	—	30	58	2.0	IPD (CVREF, High Range)
			—	45	85	3.0	
			—	75	142	5.0	
D025E		μA	—	39	76	2.0	IPD (CVREF, Low Range)
			—	59	114	3.0	
			—	98	190	5.0	
D026E		μA	—	5.5	30	2.0	IPD (T1 OSC, 32 kHz)
			—	7.0	35	3.0	
			—	8.5	45	5.0	
D027E		μA	—	0.2	12	3.0	IPD (A2D on, not converting)
			—	0.3	15	5.0	

TABLE 16-16: WATCHDOG TIMER SPECIFICATIONS FOR PIC12F615-H (High Temp.)

Param No.	Sym	Characteristic	Units	Min	Typ	Max	Conditions
31	TWDT	Watchdog Timer Time-out Period (No Prescaler)	ms	6	20	70	150°C Temperature

TABLE 16-17: LEAKAGE CURRENT SPECIFICATIONS FOR PIC12F615-H (High Temp.)

Param No.	Sym	Characteristic	Units	Min	Typ	Max	Conditions
D061	IIL	Input Leakage Current(1) (GP3/RA3/$\overline{\text{MCLR}}$)	μA	—	±0.5	±5.0	VSS ≤ VPIN ≤ VDD
D062	IIL	Input Leakage Current(2) (GP3/RA3/$\overline{\text{MCLR}}$)	μA	50	250	400	VDD = 5.0V

Note 1: This specification applies when GP3/RA3/$\overline{\text{MCLR}}$ is configured as an input with the pull-up disabled. The leakage current for the GP3/RA3/$\overline{\text{MCLR}}$ pin is higher than for the standard I/O port pins.

2: This specification applies when GP3/RA3/$\overline{\text{MCLR}}$ is configured as the $\overline{\text{MCLR}}$ reset pin function with the weak pull-up enabled.

TABLE 16-18: OSCILLATOR PARAMETERS FOR PIC12F615-H (High Temp.)

Param No.	Sym	Characteristic	Frequency Tolerance	Units	Min	Typ	Max	Conditions
OS08	INTOSC	Int. Calibrated INTOSC Freq.(1)	±10%	MHz	7.2	8.0	8.8	2.0V ≤ VDD ≤ 5.5V -40°C ≤ TA ≤ 150°C

Note 1: To ensure these oscillator frequency tolerances, Vdd and Vss must be capacitively decoupled as close to the device as possible. 0.1 µF and 0.01 µF values in parallel are recommended.

TABLE 16-19: COMPARATOR SPECIFICATIONS FOR PIC12F615-H (High Temp.)

Param No.	Sym	Characteristic	Units	Min	Typ	Max	Conditions
CM01	VOS	Input Offset Voltage	mV	—	±5	±20	(VDD - 1.5)/2

© 2010 Microchip Technology Inc.

17.0 DC AND AC CHARACTERISTICS GRAPHS AND TABLES

Note:	The graphs and tables provided following this note are a statistical summary based on a limited number of samples and are provided for informational purposes only. The performance characteristics listed herein are not tested or guaranteed. In some graphs or tables, the data presented may be outside the specified operating range (e.g., outside specified power supply range) and therefore, outside the warranted range.

"Typical" represents the mean of the distribution at 25°C. "Maximum" or "minimum" represents (mean + 3σ) or (mean - 3σ) respectively, where s is a standard deviation, over each temperature range.

FIGURE 17-1: PIC12F609/615/617 IDD LP (32 kHz) vs. VDD

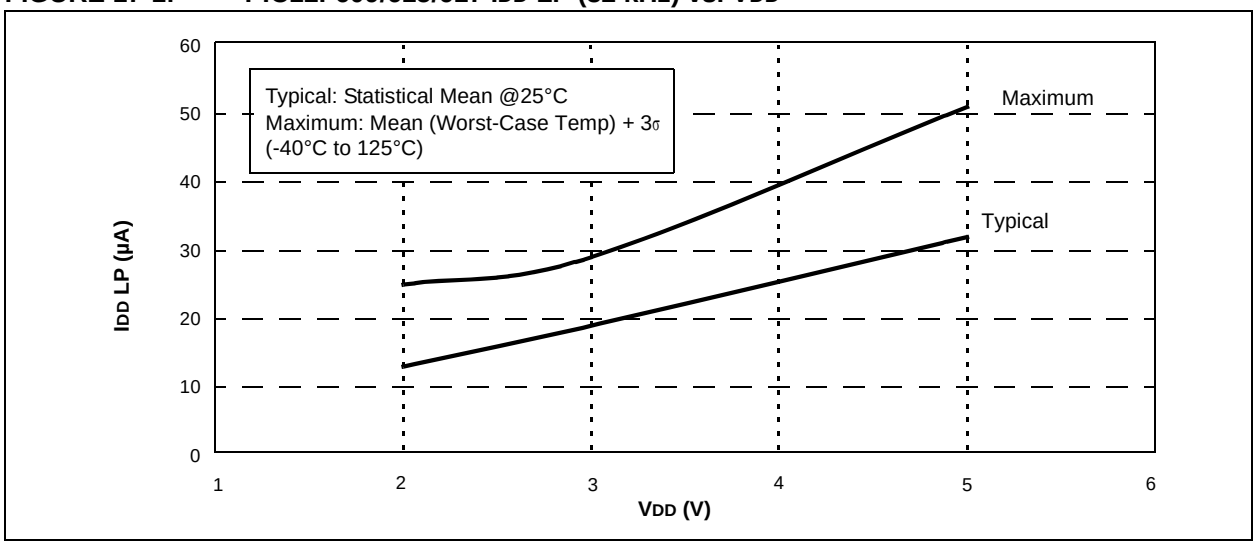

FIGURE 17-2: PIC12F609/615/617 IDD EC (1 MHz) vs. VDD

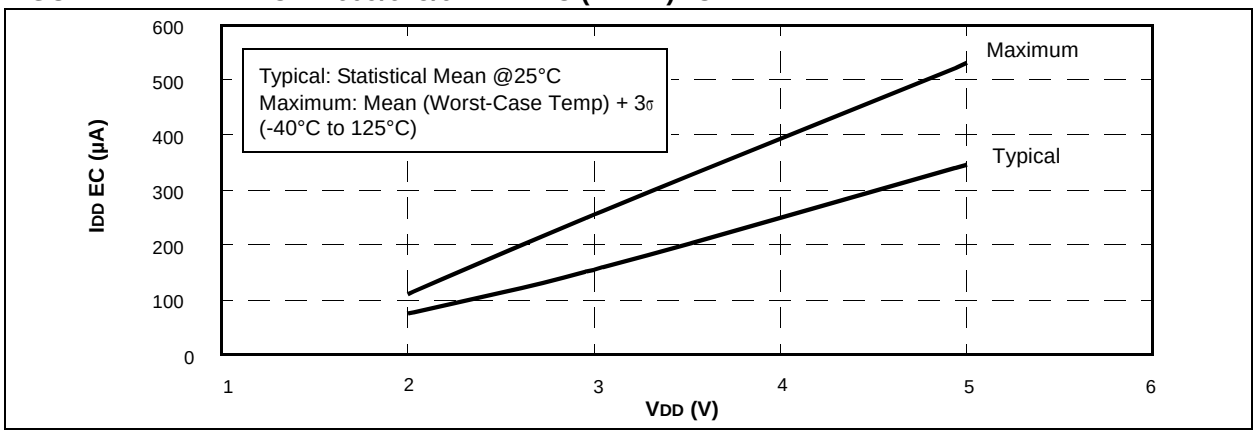

FIGURE 17-3: PIC12F609/615/617 IDD EC (4 MHz) vs. VDD

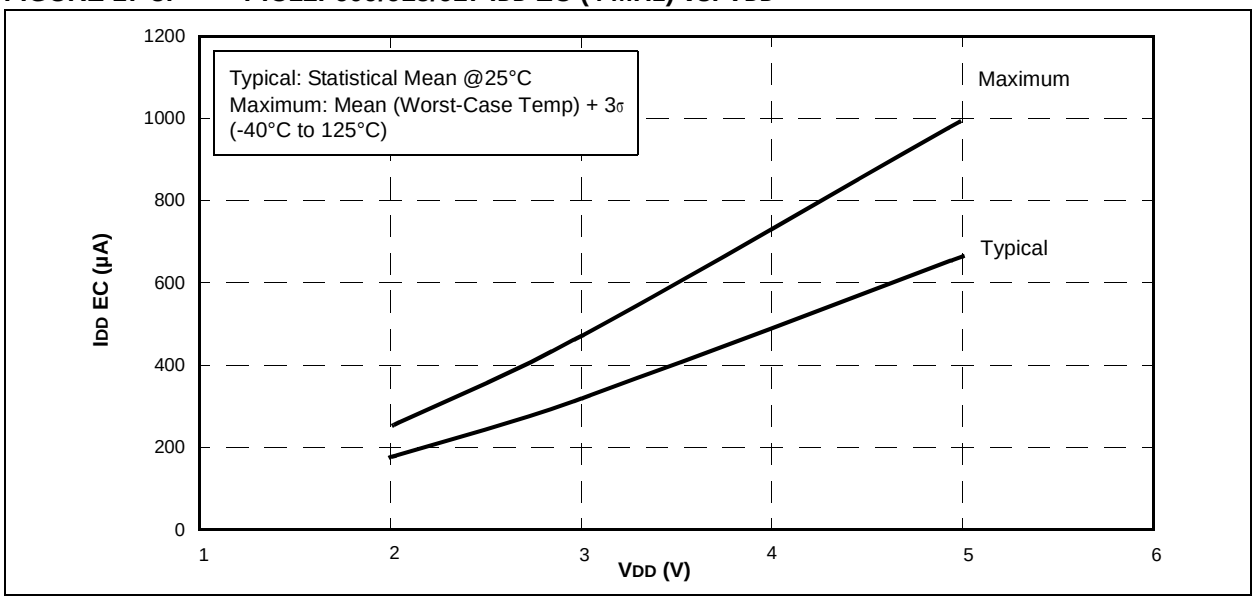

FIGURE 17-4: PIC12F609/615/617 IDD XT (1 MHz) vs. VDD

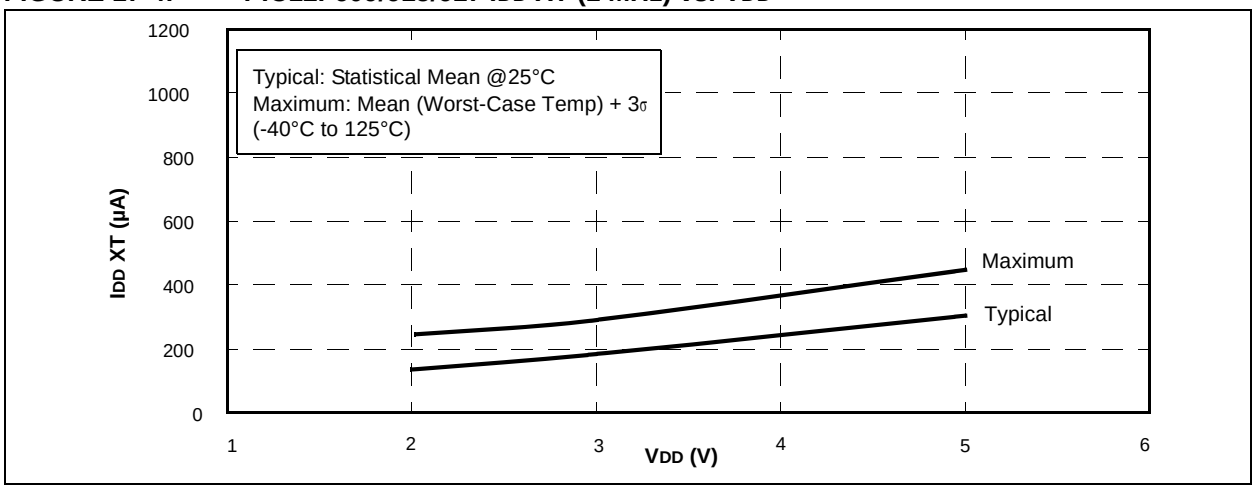

FIGURE 17-5: PIC12F609/615/617 IDD XT (4 MHz) vs. VDD

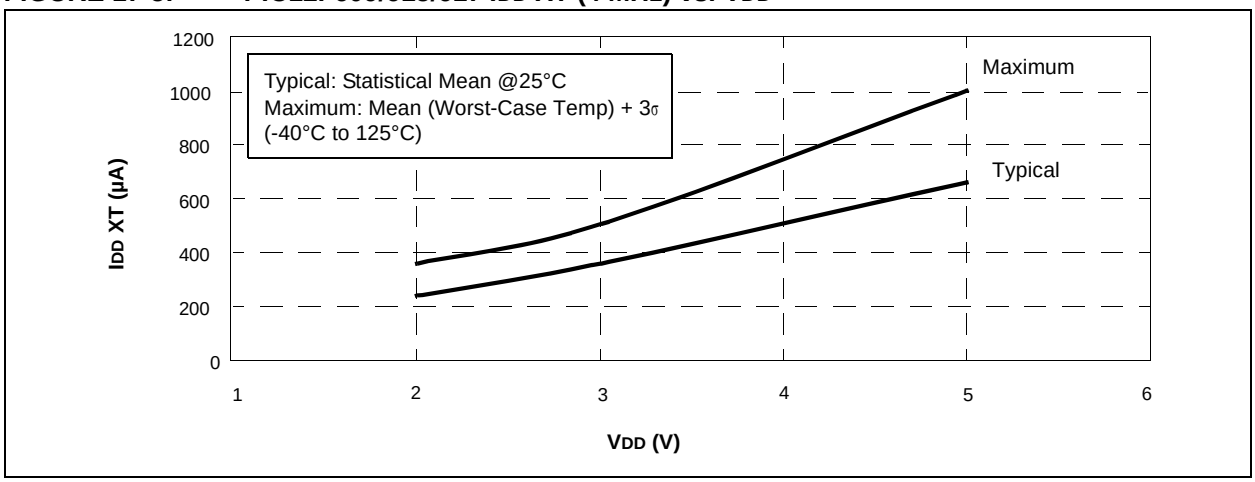

© 2010 Microchip Technology Inc.

FIGURE 17-6: PIC12F609/615/617 IDD INTOSC (4 MHz) vs. VDD

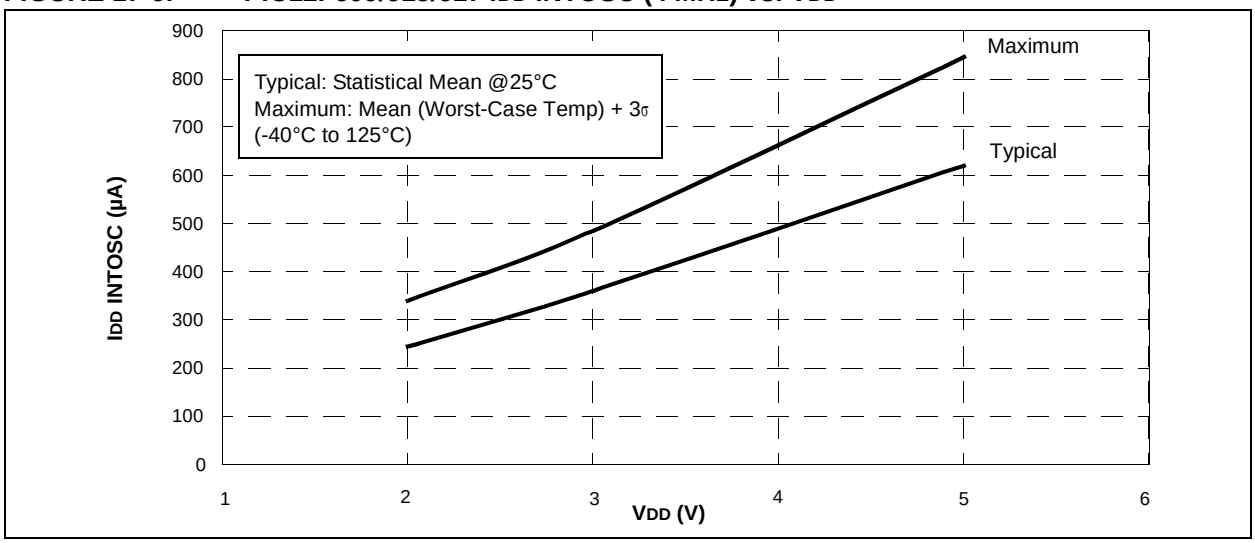

FIGURE 17-7: PIC12F609/615/617 IDD INTOSC (8 MHz) vs. VDD

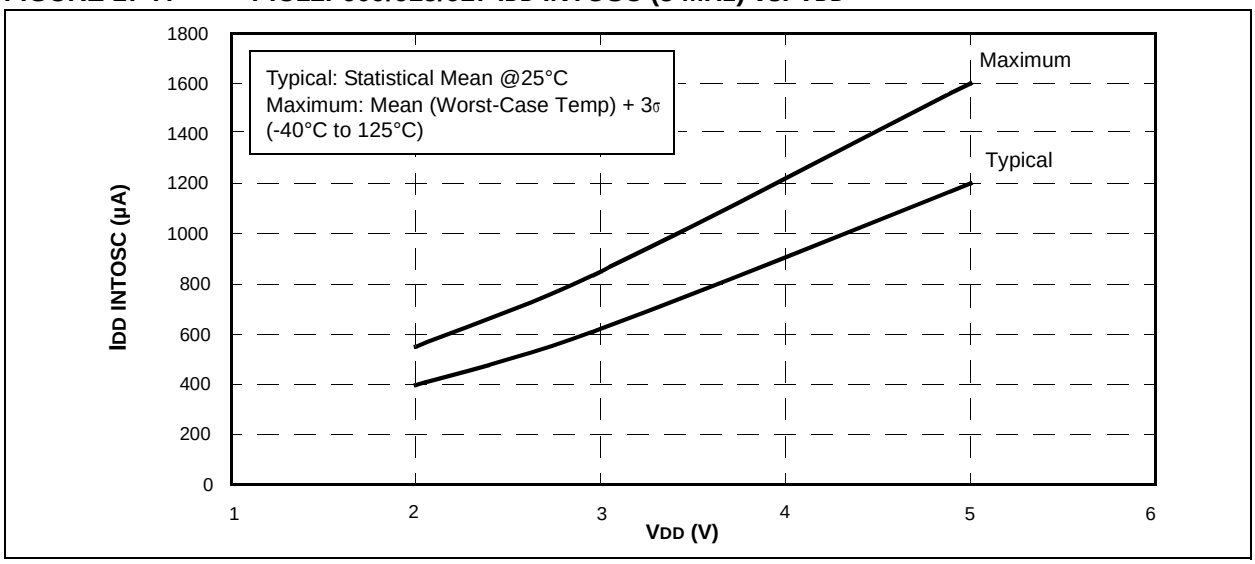

FIGURE 17-8: PIC12F609/615617 IDD EXTRC (4 MHz) vs. VDD

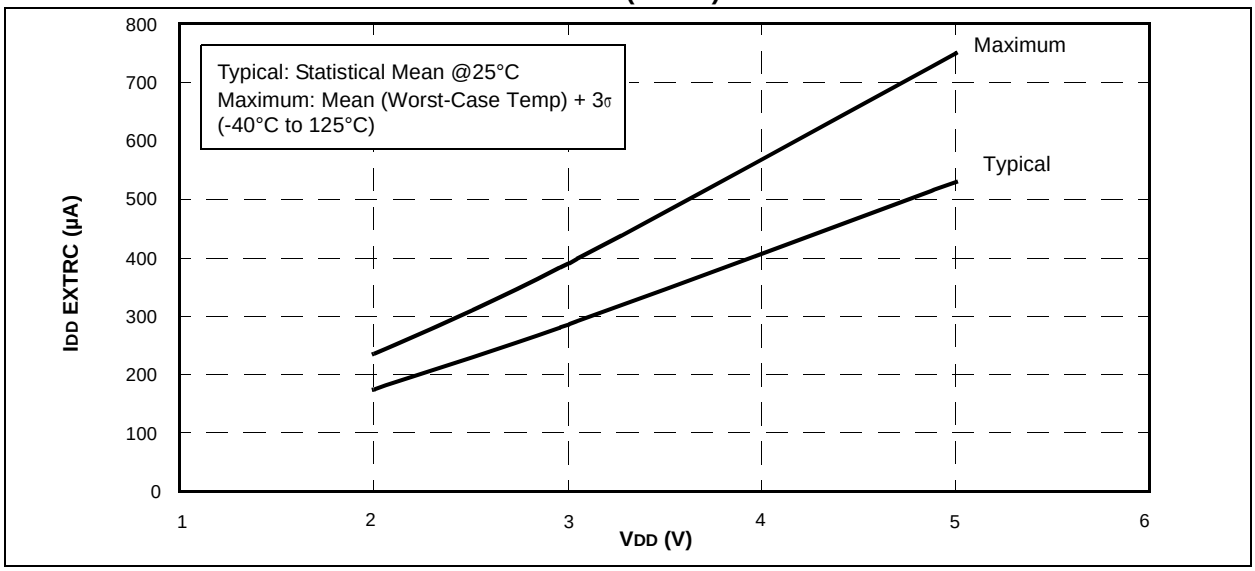

FIGURE 17-9: PIC12F609/615/617 IDD HS (20 MHz) vs. VDD

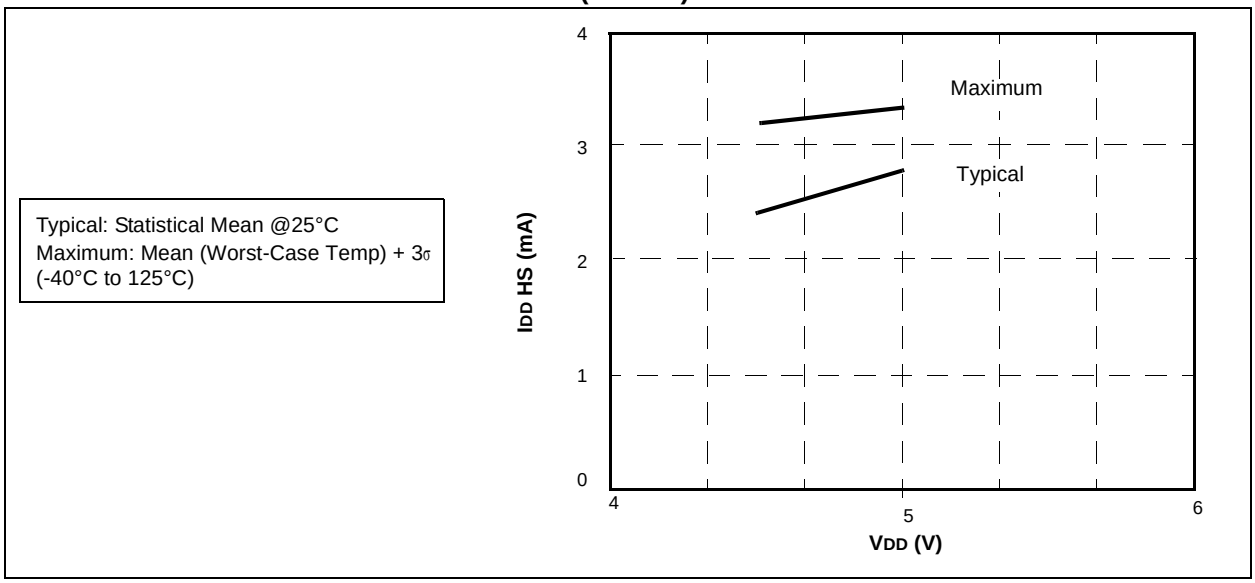

© 2010 Microchip Technology Inc.

FIGURE 17-10: PIC12F609/615/617 IPD BASE vs. VDD

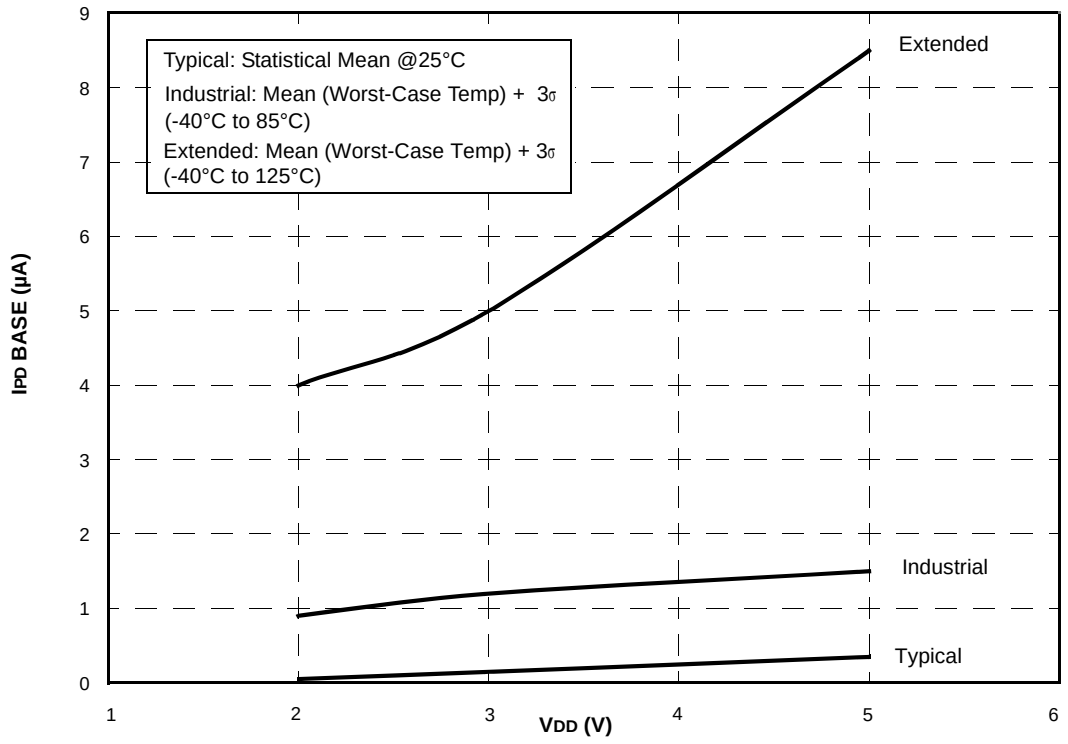

FIGURE 17-11: PIC12F609/615/617 IPD COMPARATOR (SINGLE ON) vs. VDD

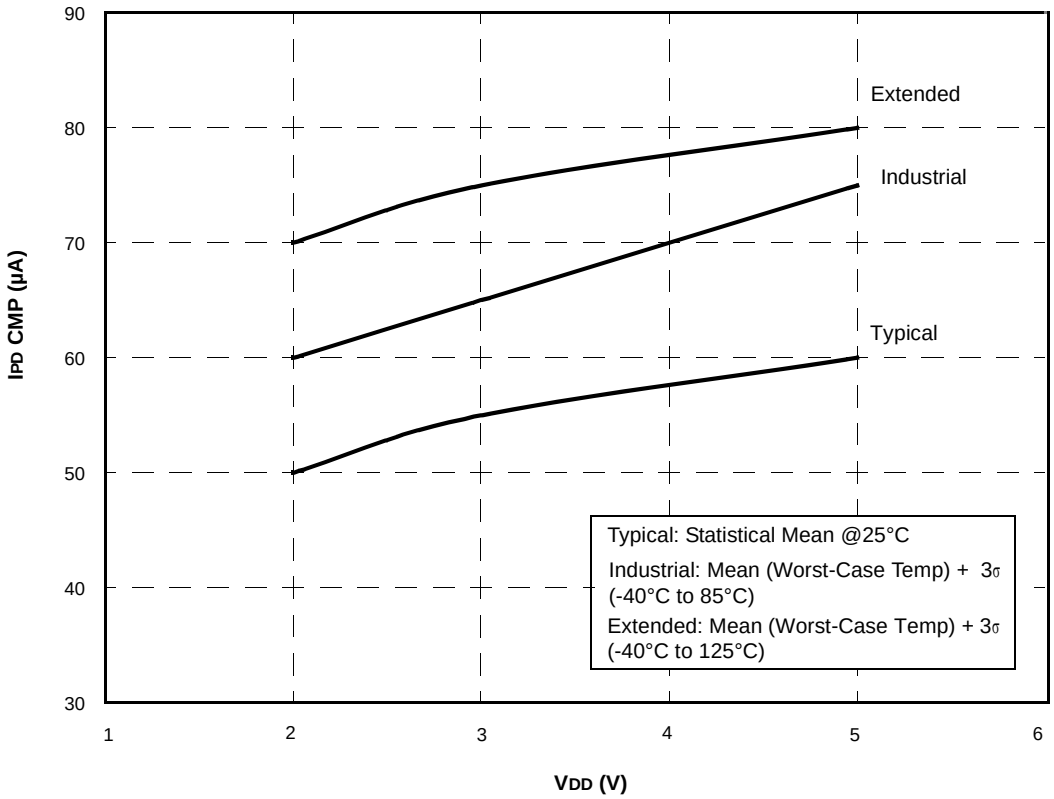

FIGURE 17-12: PIC12F609/615/617 IPD WDT vs. VDD

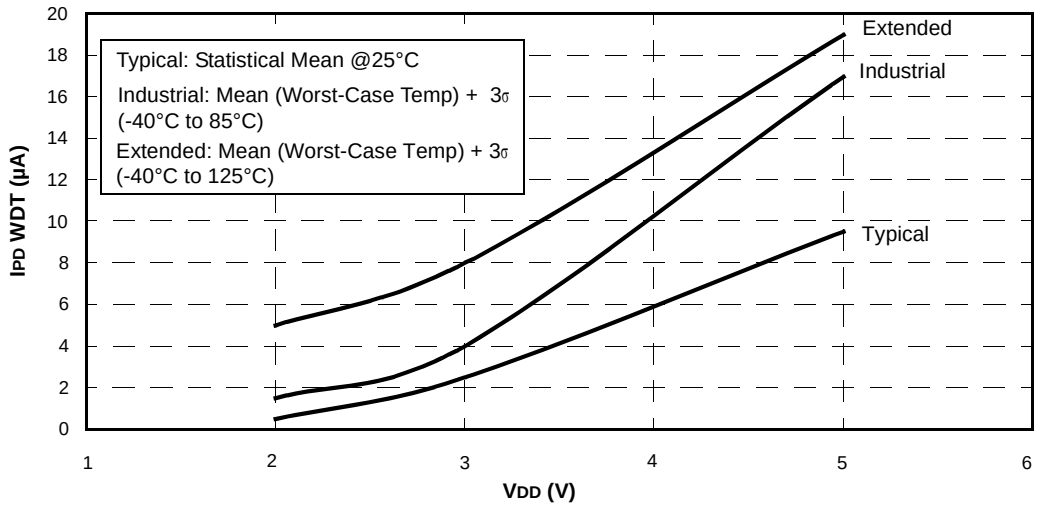

FIGURE 17-13: PIC12F609/615/617 IPD BOR vs. VDD

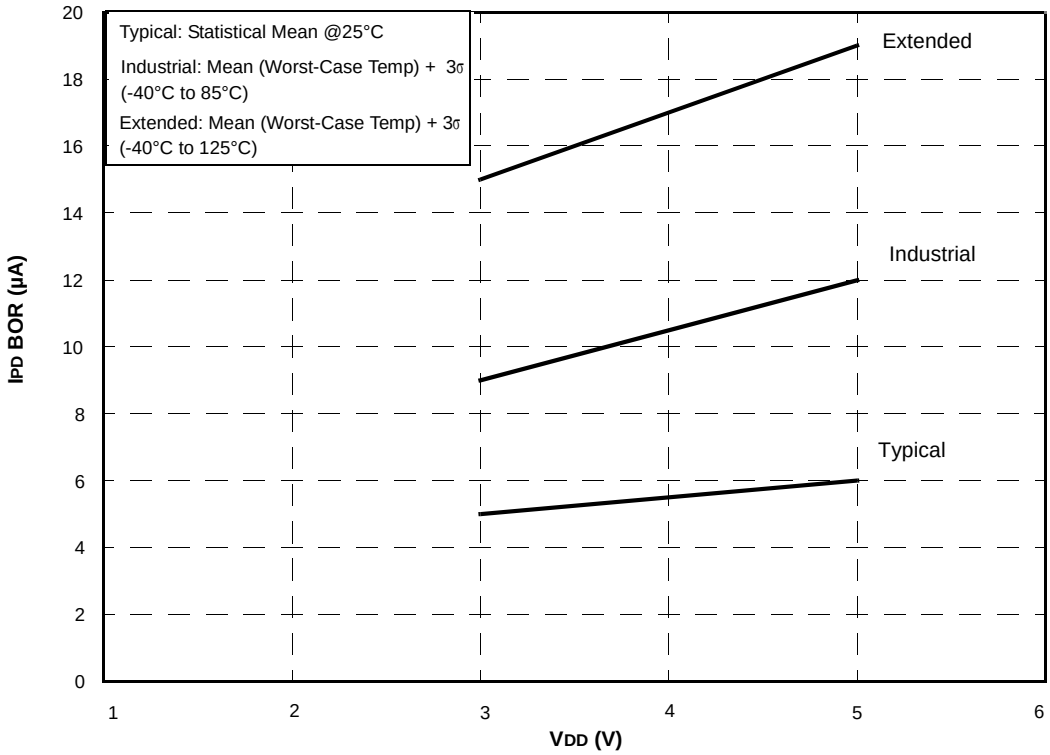

© 2010 Microchip Technology Inc.

FIGURE 17-14: PIC12F609/615/617 IPD CVREF (LOW RANGE) vs. VDD

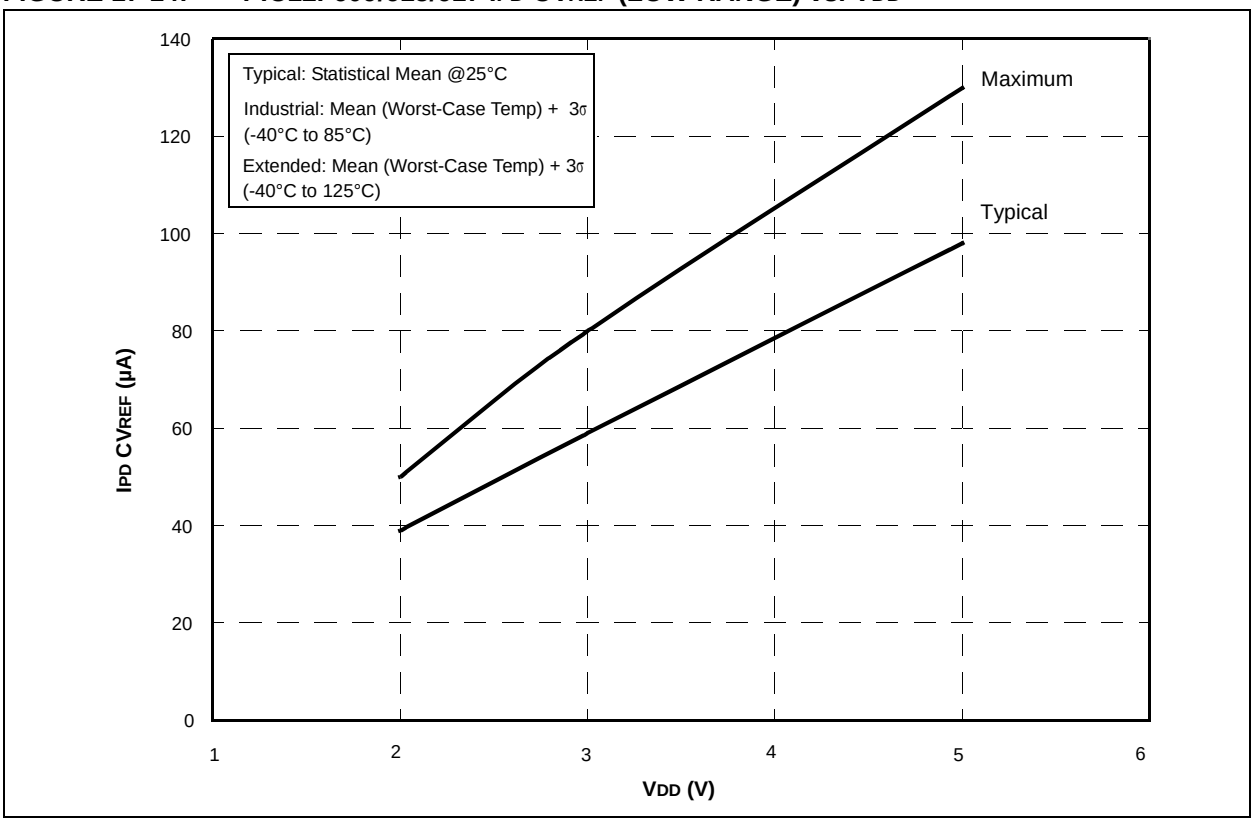

FIGURE 17-15: PIC12F609/615/617 IPD CVREF (HI RANGE) vs. VDD

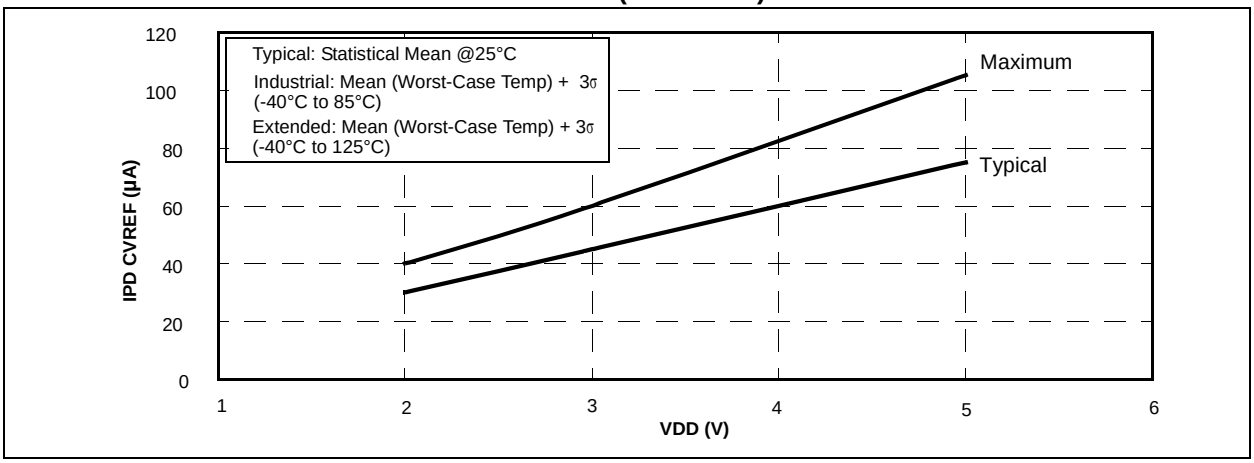

FIGURE 17-16: PIC12F609/615/617 IPD T1OSC vs. VDD

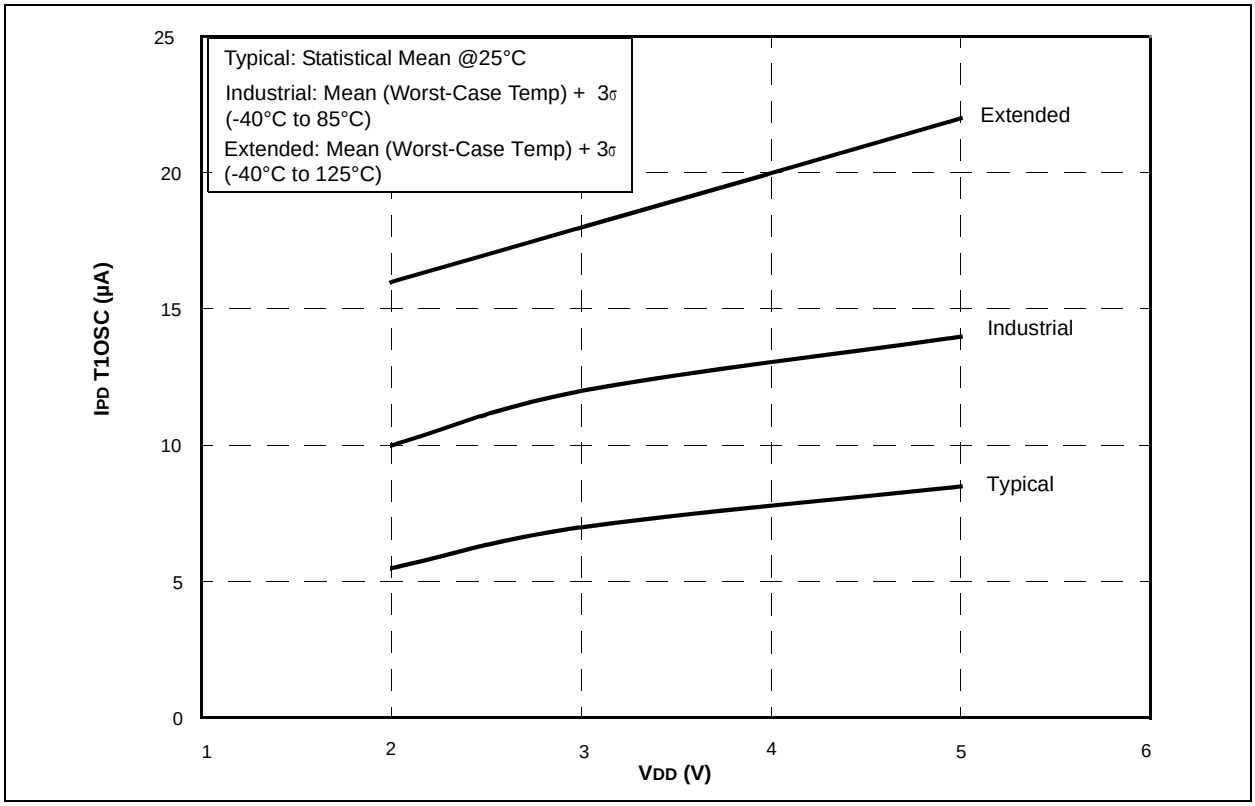

FIGURE 17-17: PIC12F615/617 IPD A/D vs. VDD

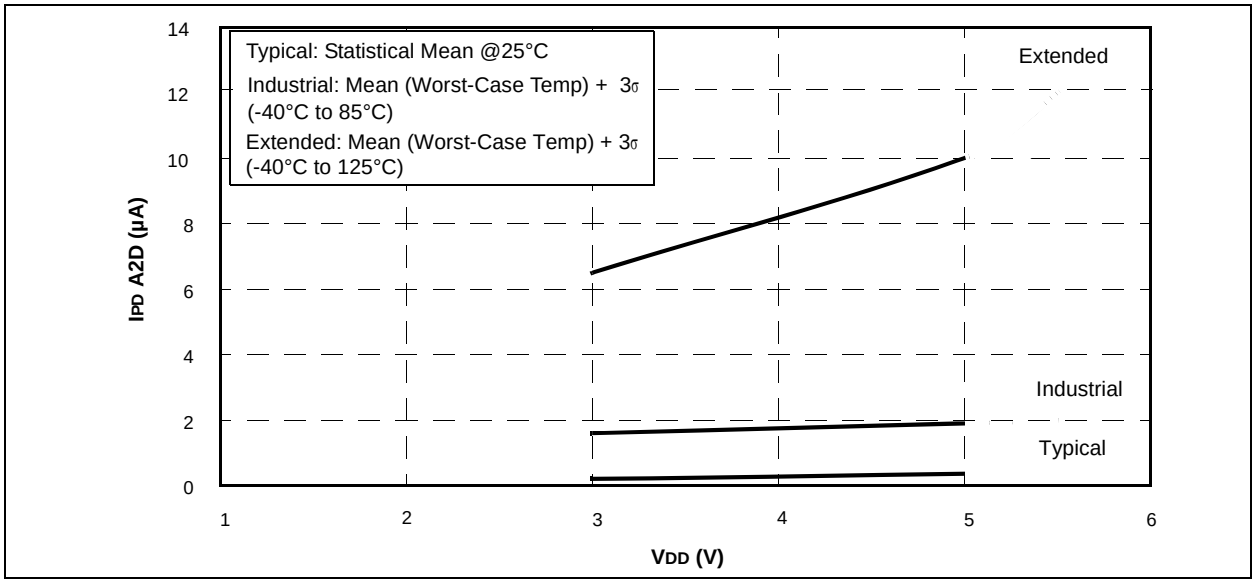

© 2010 Microchip Technology Inc.

FIGURE 17-18: PIC12HV609/615 IDD LP (32 kHz) vs. VDD

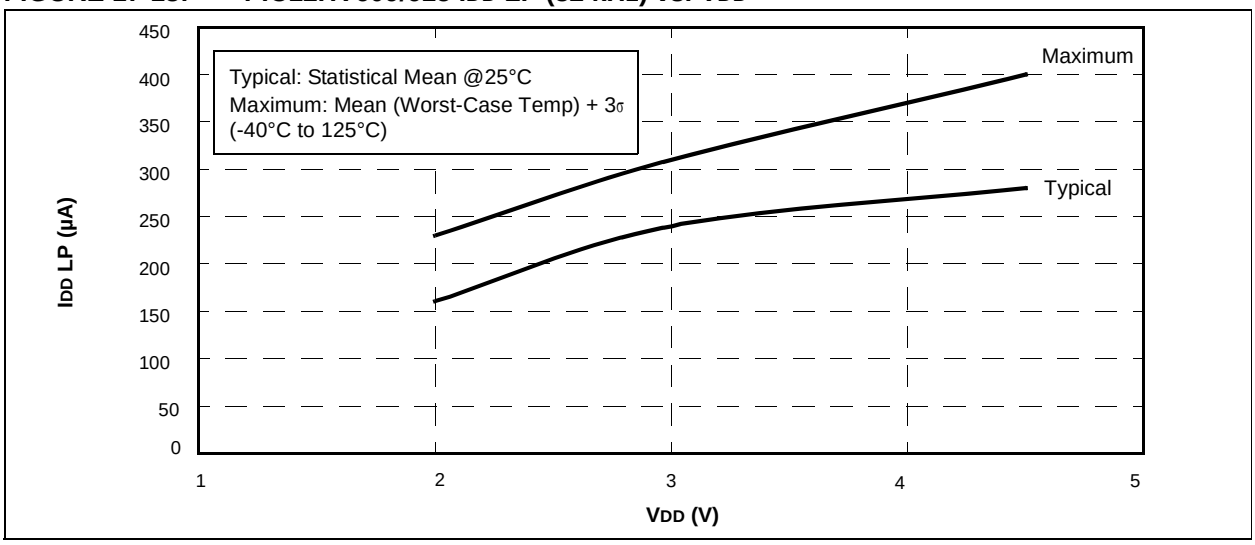

FIGURE 17-19: PIC12HV609/615 IDD EC (1 MHz) vs. VDD

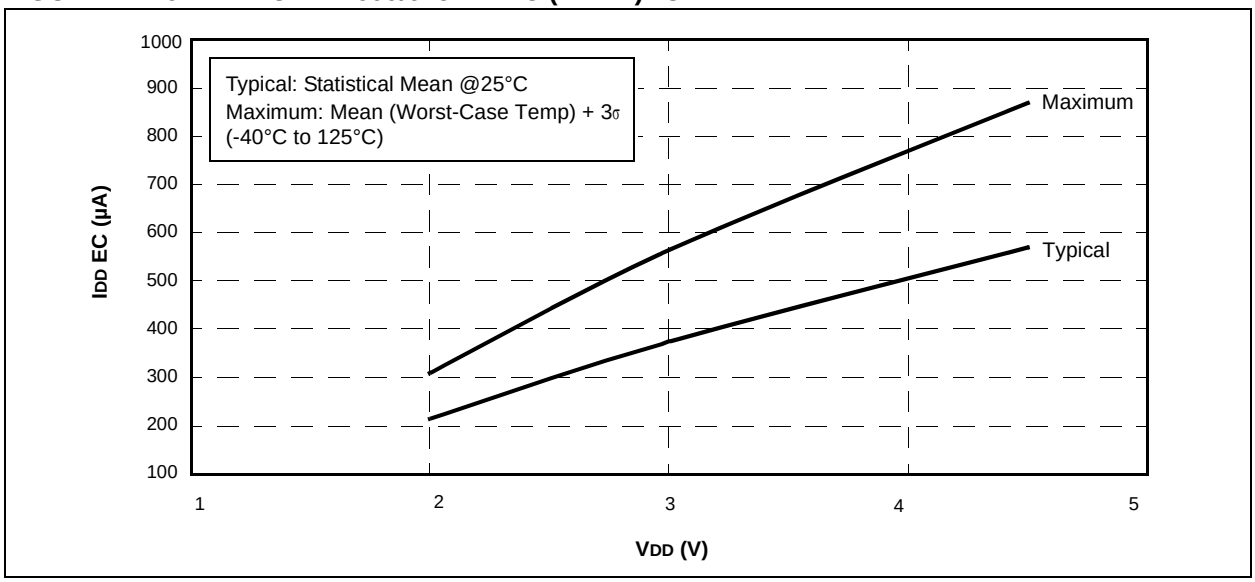

FIGURE 17-20: PIC12HV609/615 IDD EC (4 MHz) vs. VDD

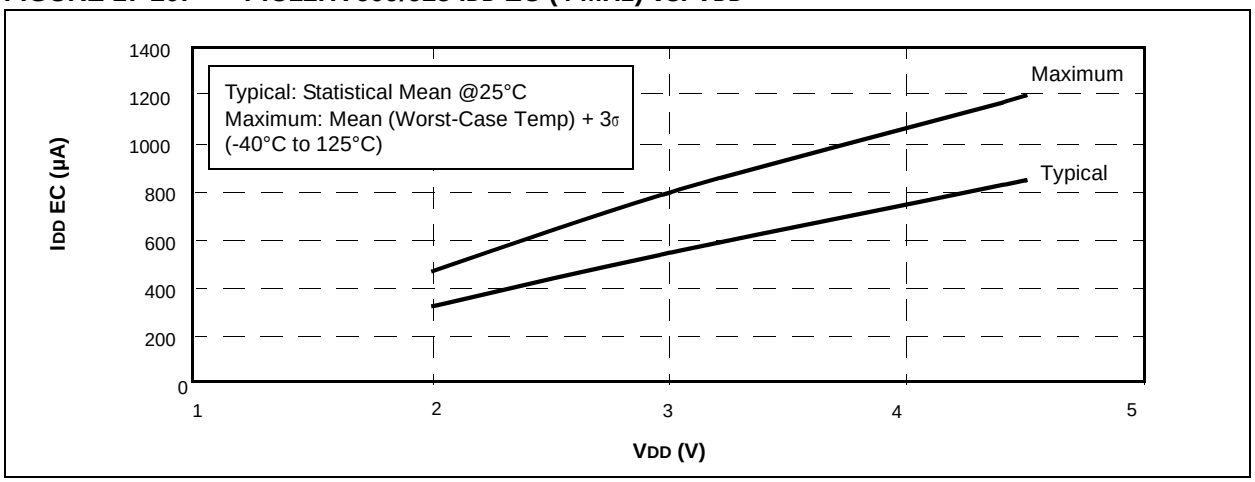

FIGURE 17-21: PIC12HV609/615 IDD XT (1 MHz) vs. VDD

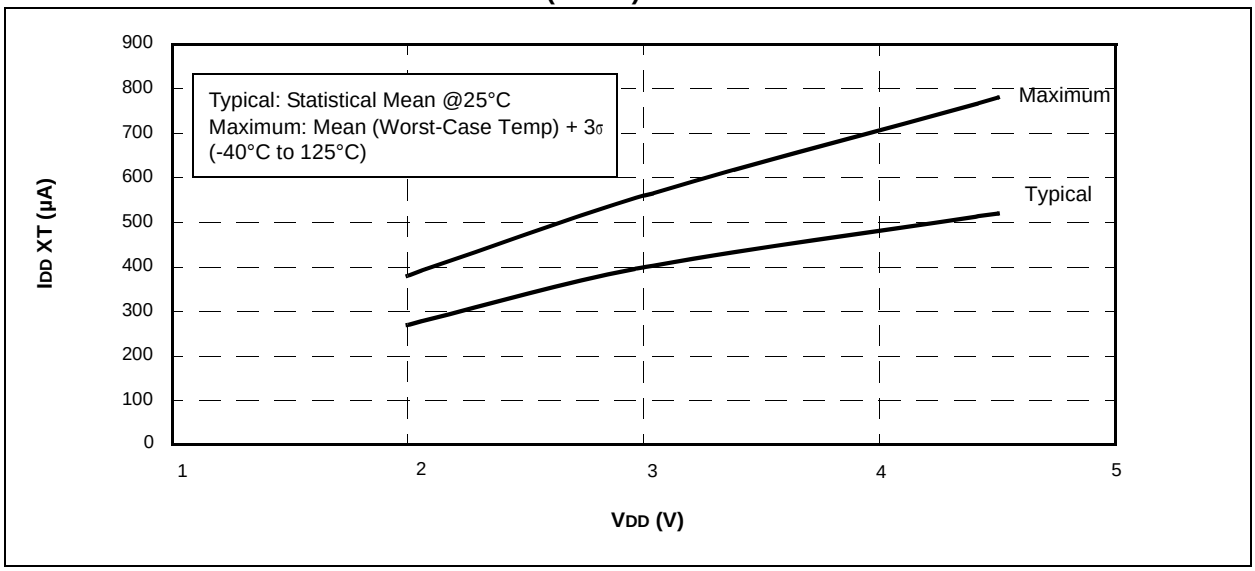

FIGURE 17-22: PIC12HV609/615 IDD XT (4 MHz) vs. VDD

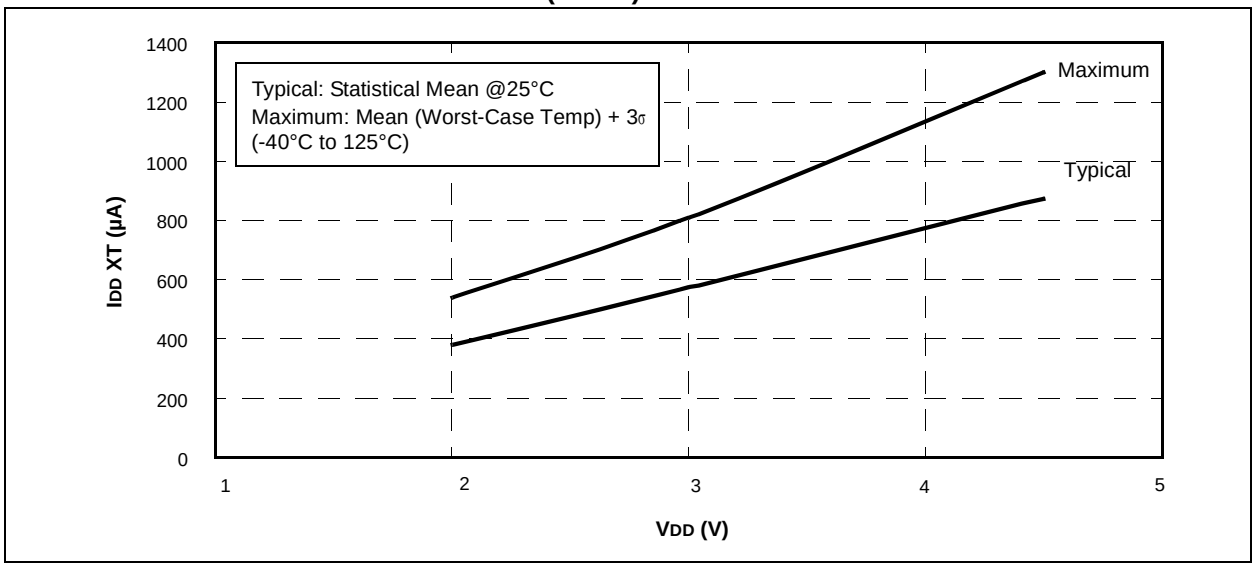

FIGURE 17-23: PIC12HV609/615 IDD INTOSC (4 MHz) vs. VDD

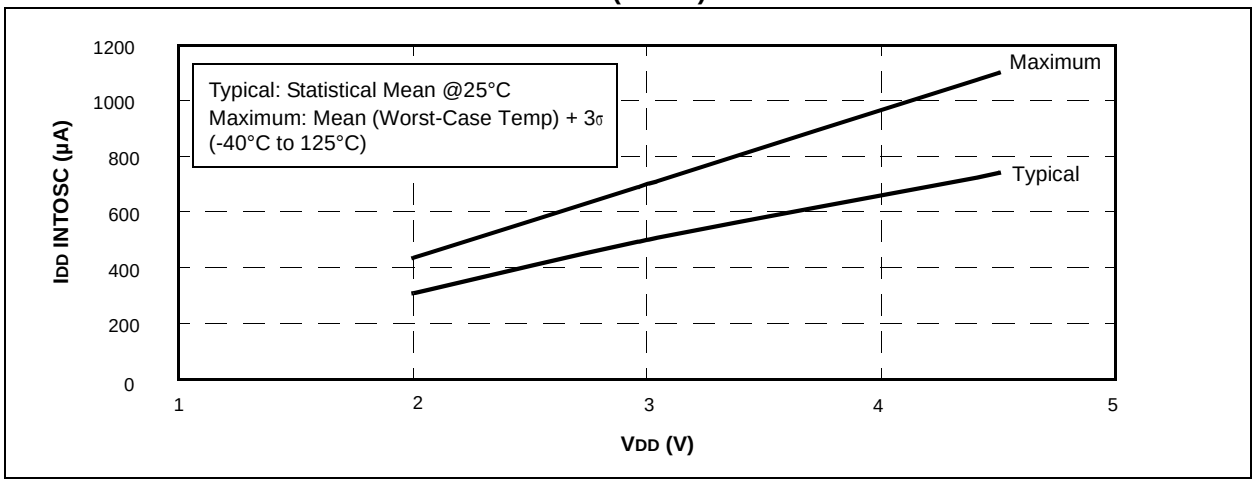

© 2010 Microchip Technology Inc.

FIGURE 17-24: PIC12HV609/615 IDD INTOSC (8 MHz) vs. VDD

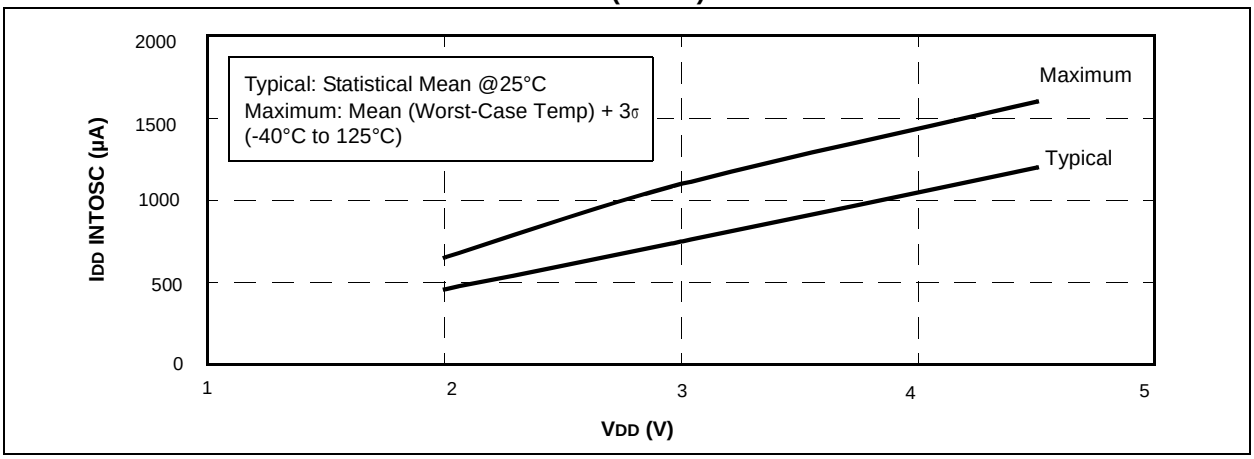

FIGURE 17-25: PIC12HV609/615 IDD EXTRC (4 MHz) vs. VDD

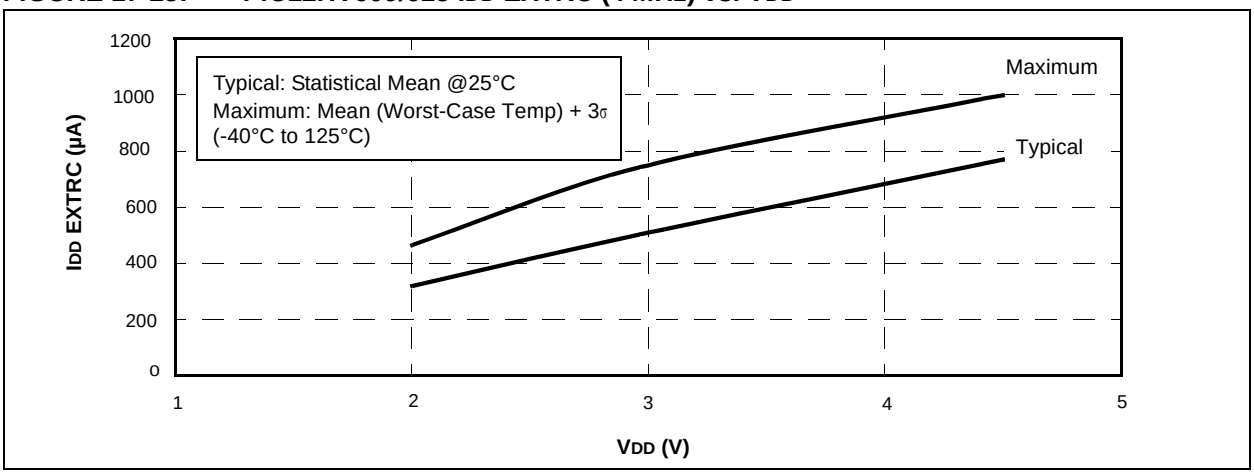

FIGURE 17-26: PIC12HV609/615 IPD BASE vs. VDD

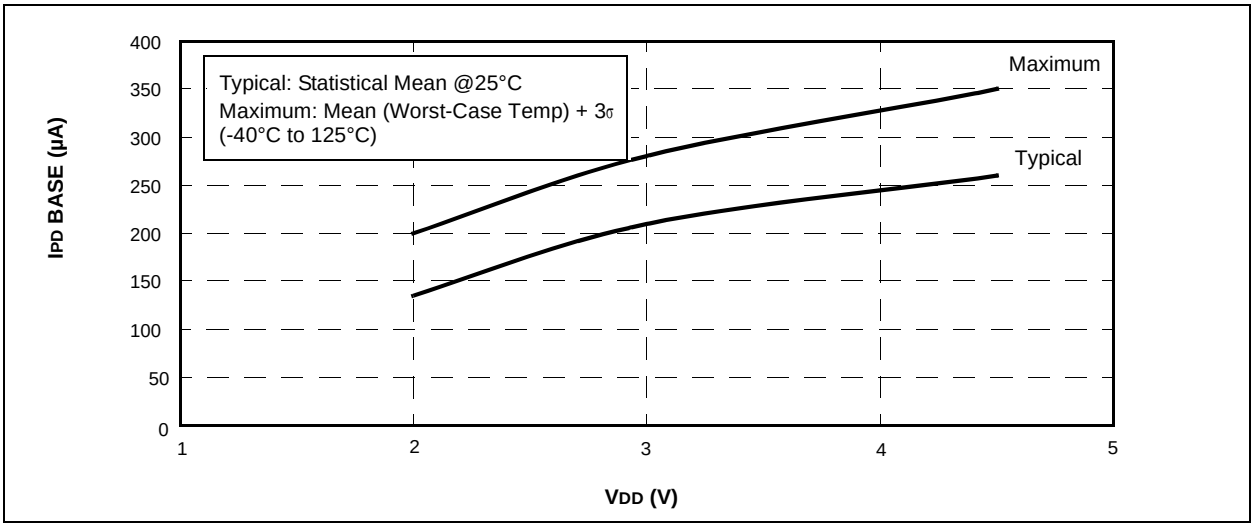

FIGURE 17-27: PIC12HV609/615 IPD COMPARATOR (SINGLE ON) vs. VDD

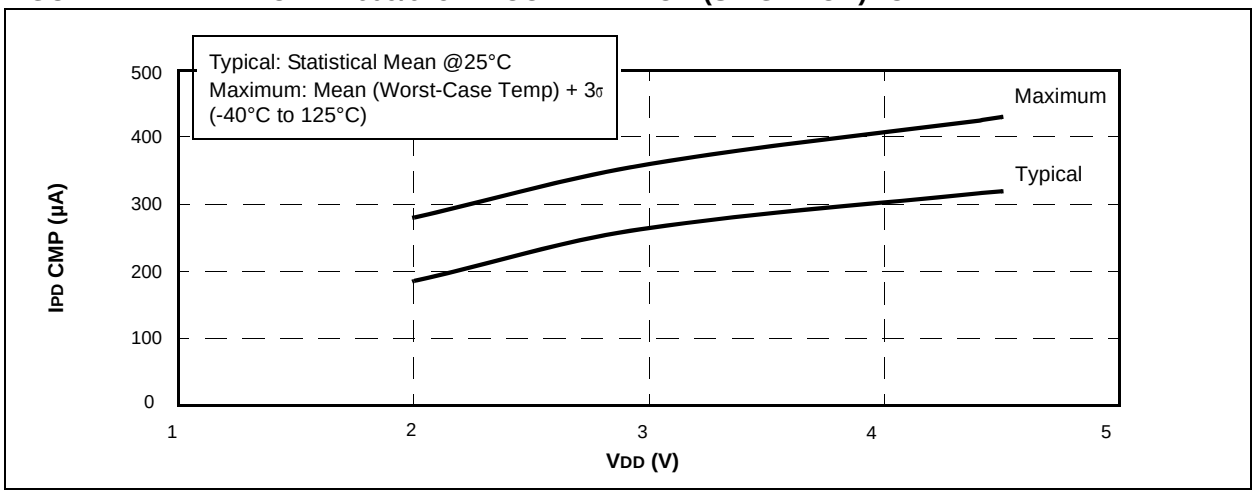

FIGURE 17-28: PIC12HV609/615 IPD WDT vs. VDD

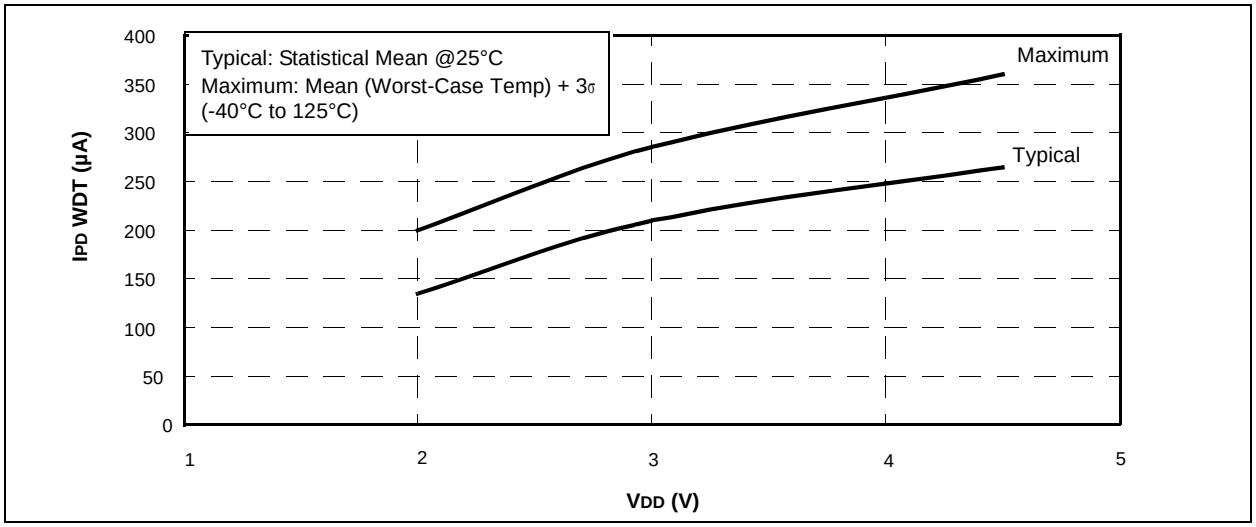

FIGURE 17-29: PIC12HV609/615 IPD BOR vs. VDD

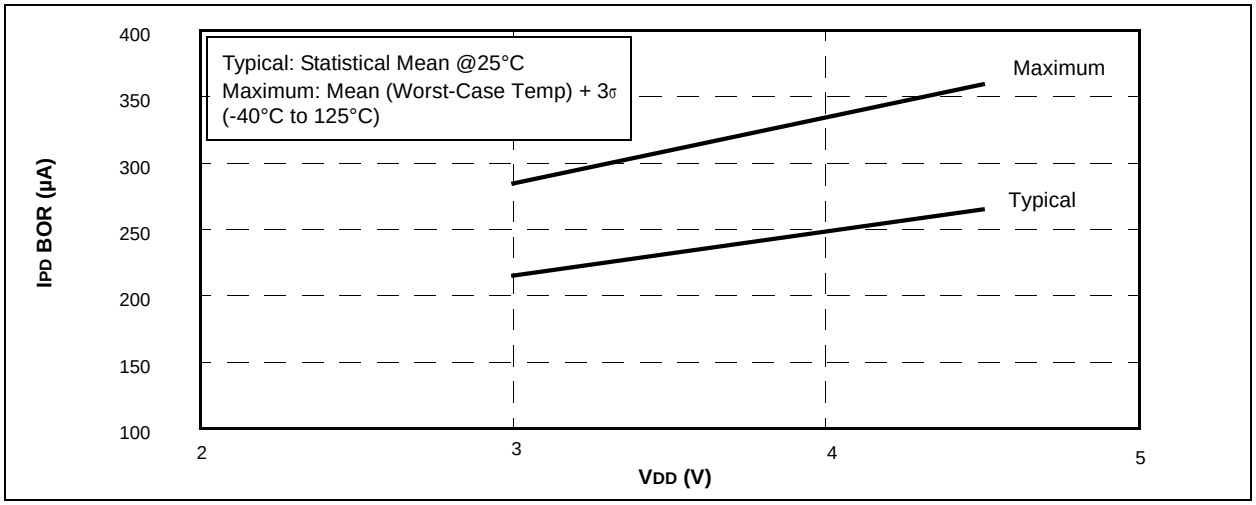

© 2010 Microchip Technology Inc.

FIGURE 17-30: PIC12HV609/615 IPD CVREF (LOW RANGE) vs. VDD

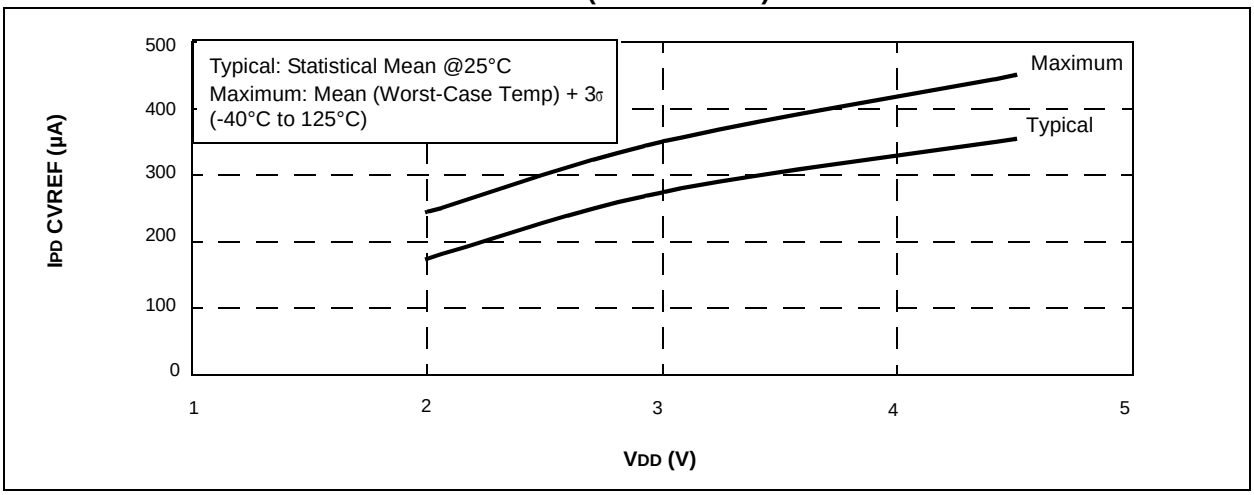

FIGURE 17-31: PIC12HV609/615 IPD CVREF (HI RANGE) vs. VDD

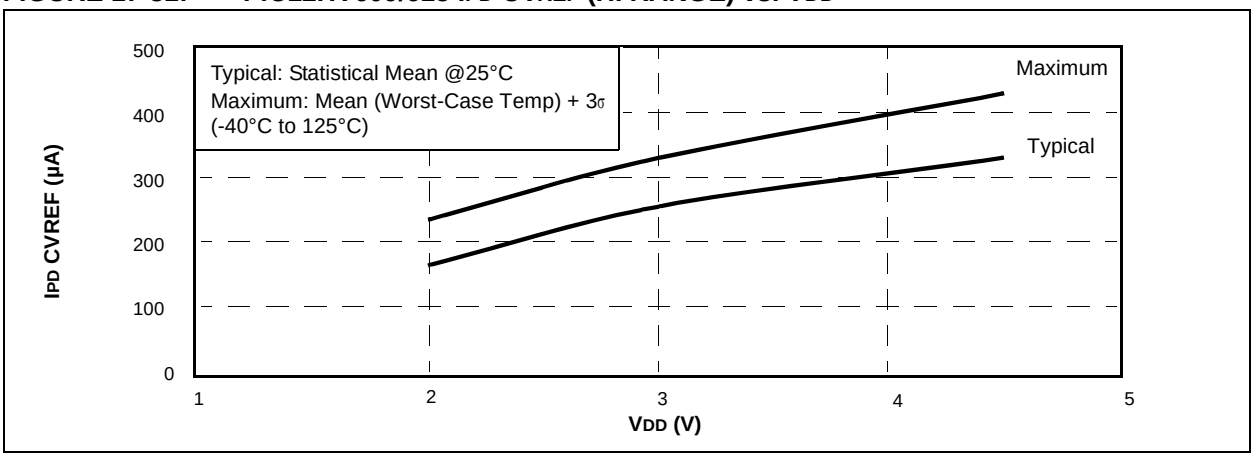

FIGURE 17-32: PIC12HV609/615 IPD T1OSC vs. VDD

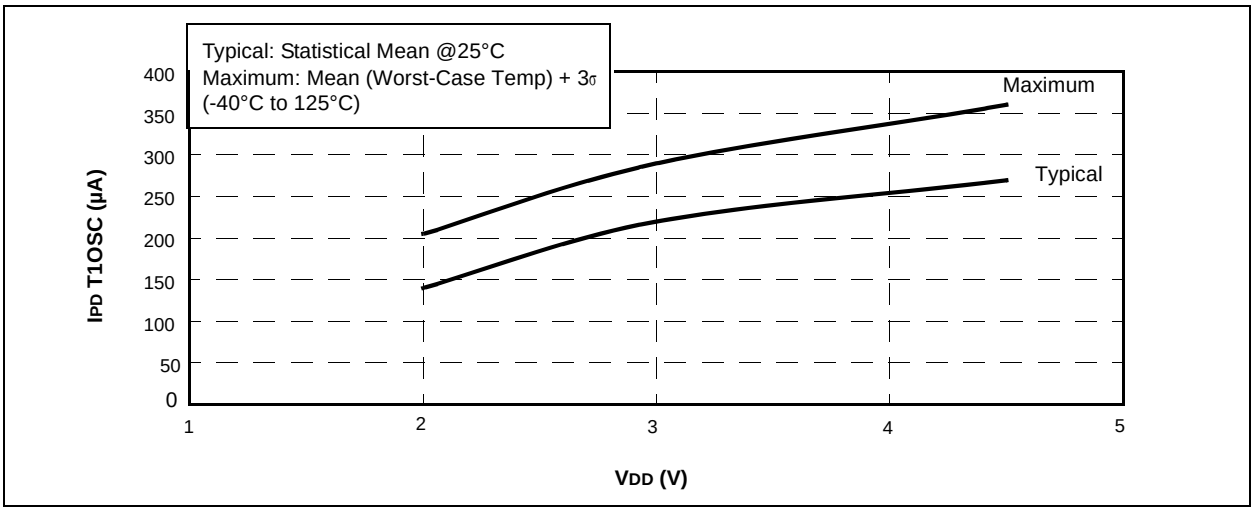

FIGURE 17-33: PIC12HV615 IPD A/D vs. VDD

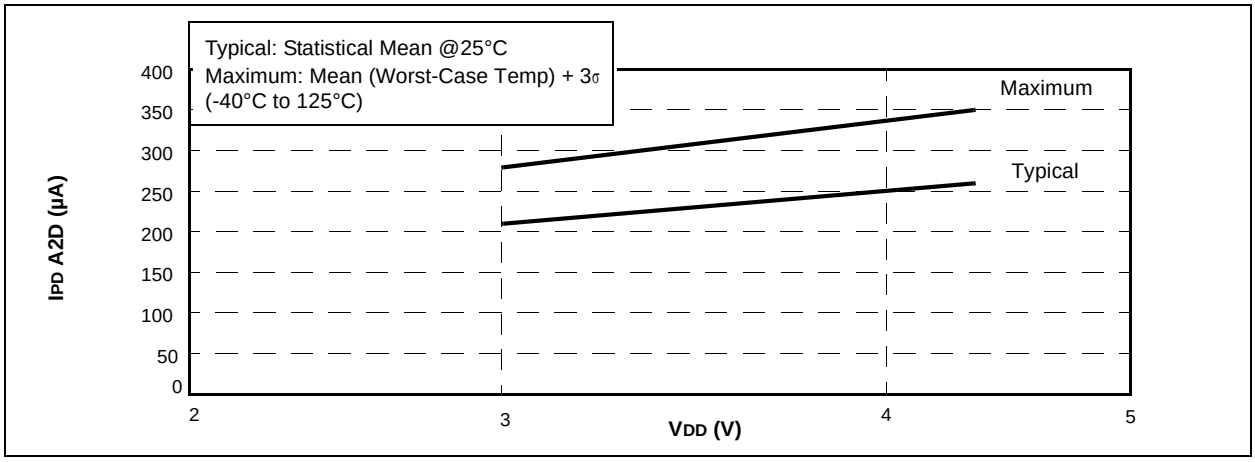

FIGURE 17-34: VOL vs. IOL OVER TEMPERATURE (VDD = 3.0V)

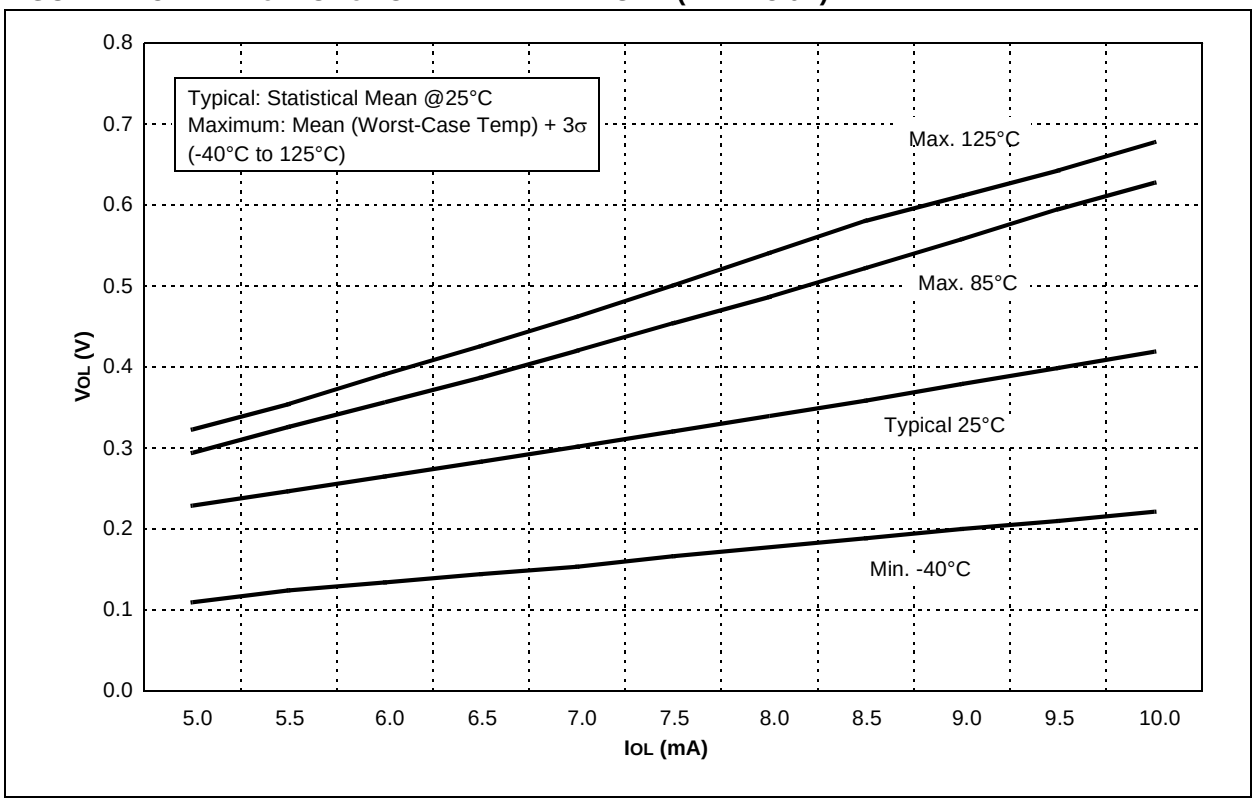

© 2010 Microchip Technology Inc.

FIGURE 17-35: VOL VS. IOL OVER TEMPERATURE (VDD = 5.0V)

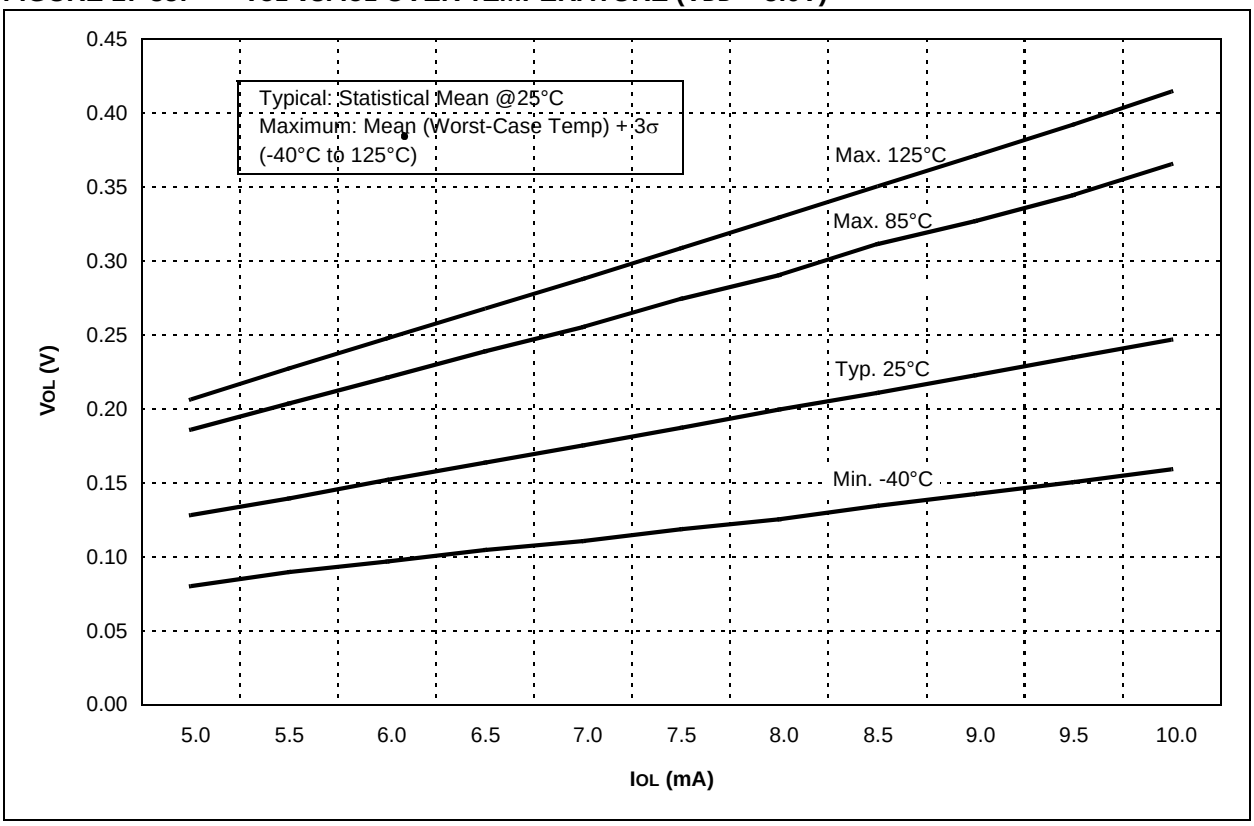

FIGURE 17-36: VOH VS. IOH OVER TEMPERATURE (VDD = 3.0V)

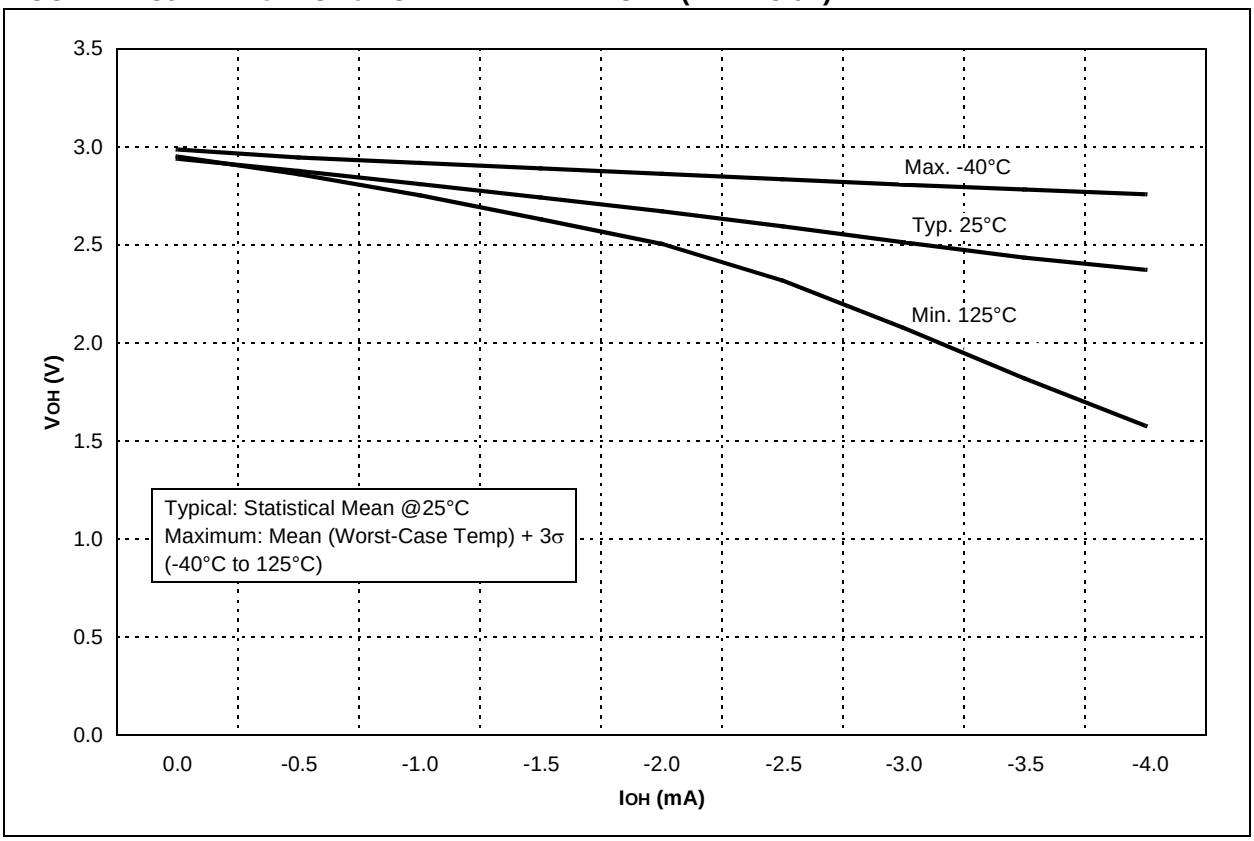

FIGURE 17-37: VOH vs. IOH OVER TEMPERATURE (VDD = 5.0V)

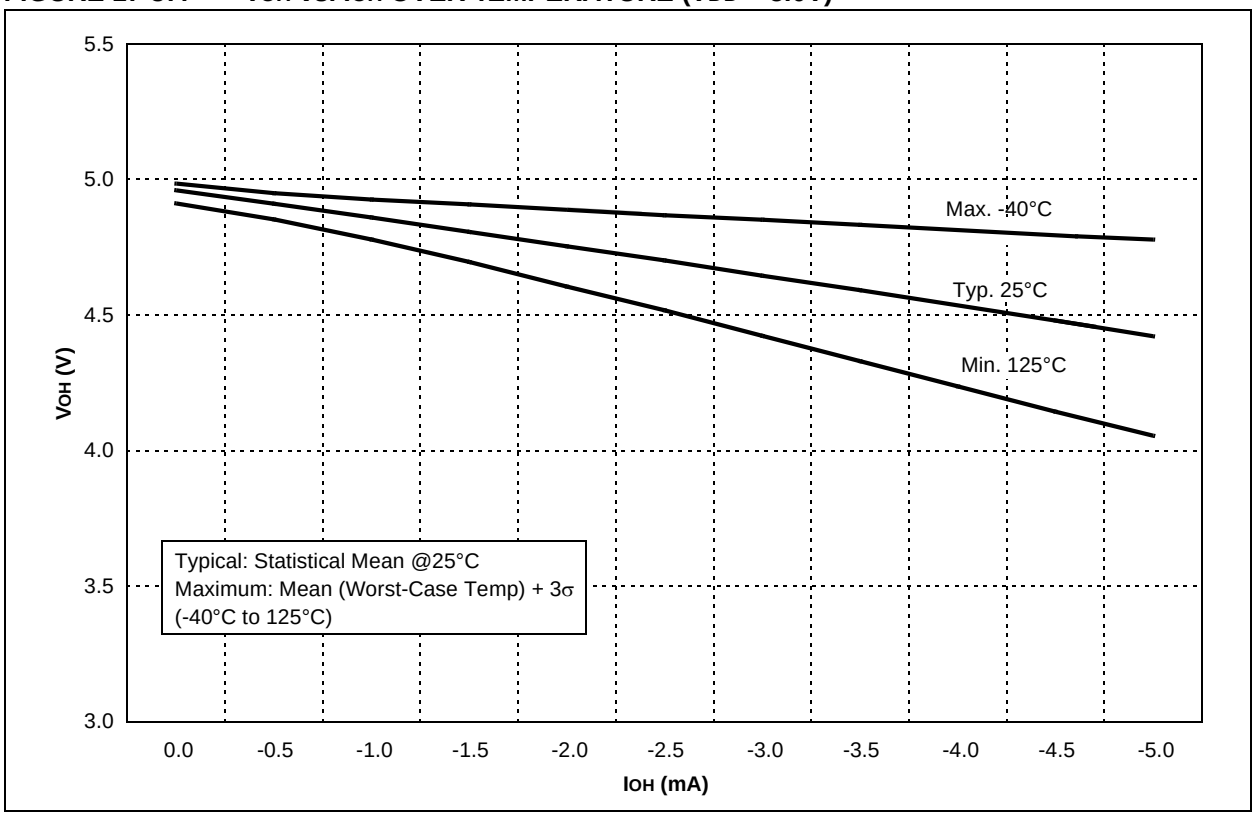

FIGURE 17-38: TTL INPUT THRESHOLD VIN vs. VDD OVER TEMPERATURE

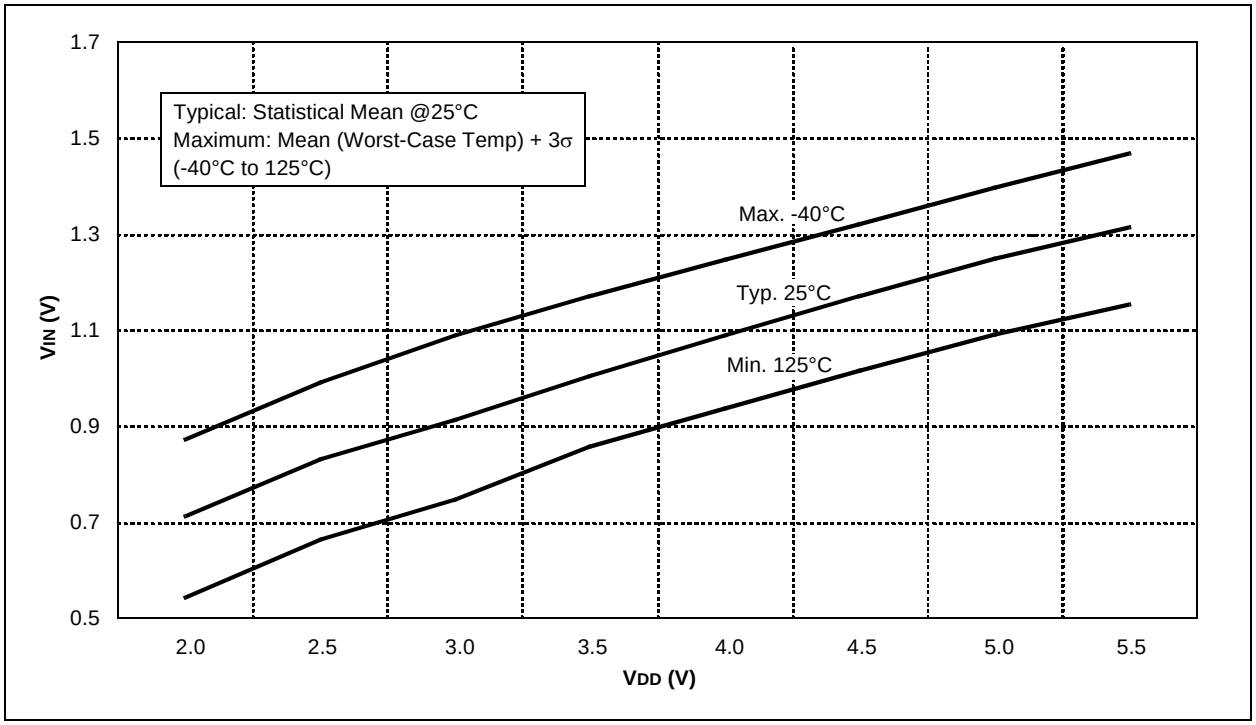

© 2010 Microchip Technology Inc.

FIGURE 17-39: SCHMITT TRIGGER INPUT THRESHOLD VIN vs. VDD OVER TEMPERATURE

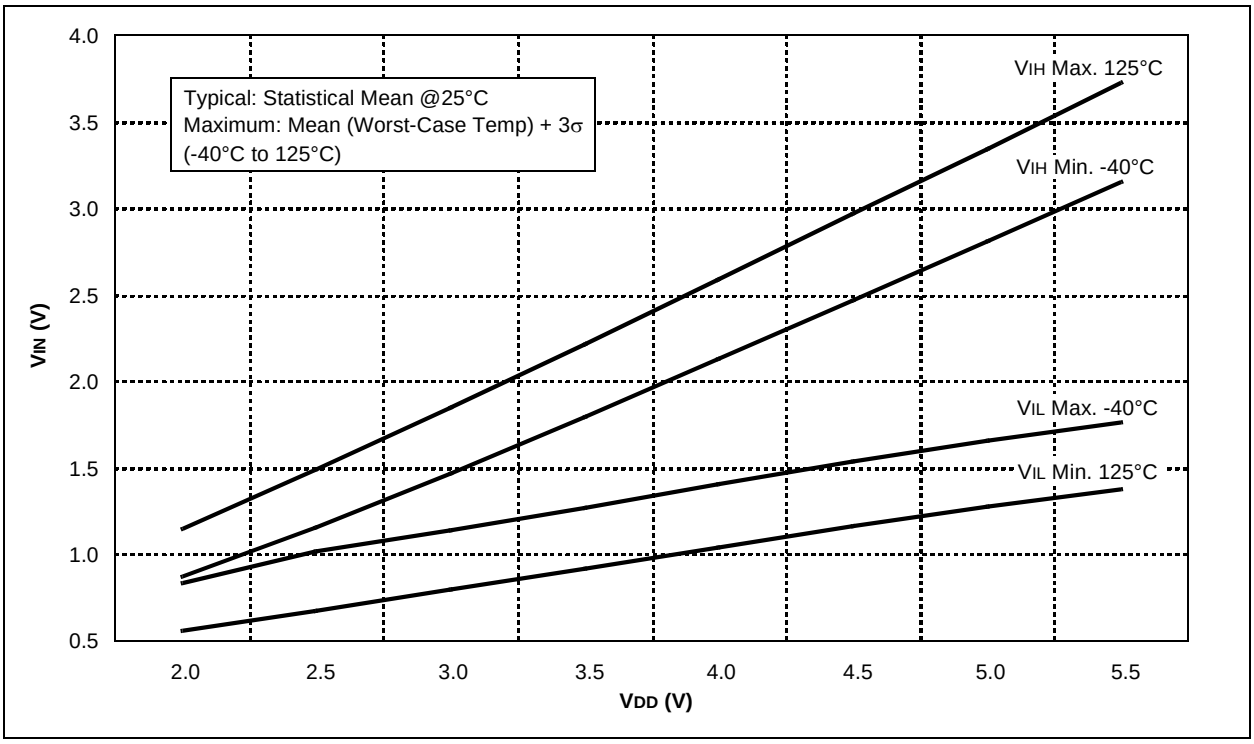

FIGURE 17-40: TYPICAL HFINTOSC START-UP TIMES vs. VDD OVER TEMPERATURE

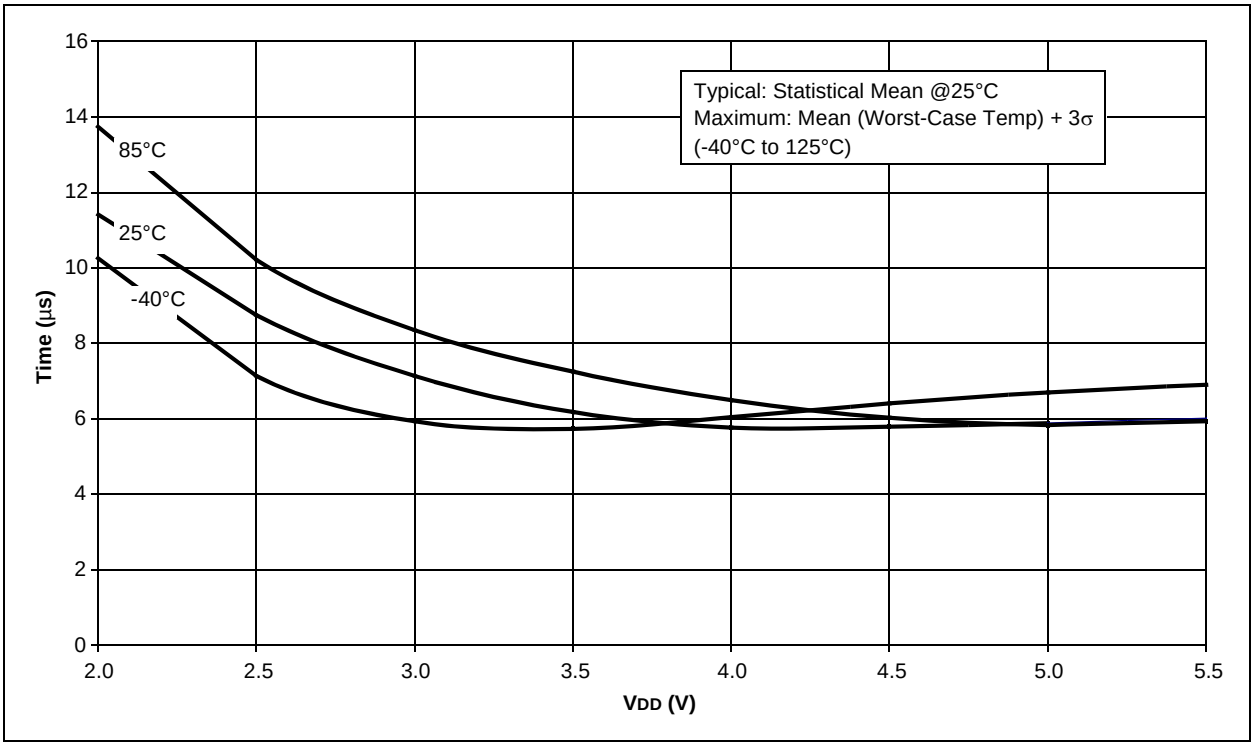

FIGURE 17-41: MAXIMUM HFINTOSC START-UP TIMES vs. VDD OVER TEMPERATURE

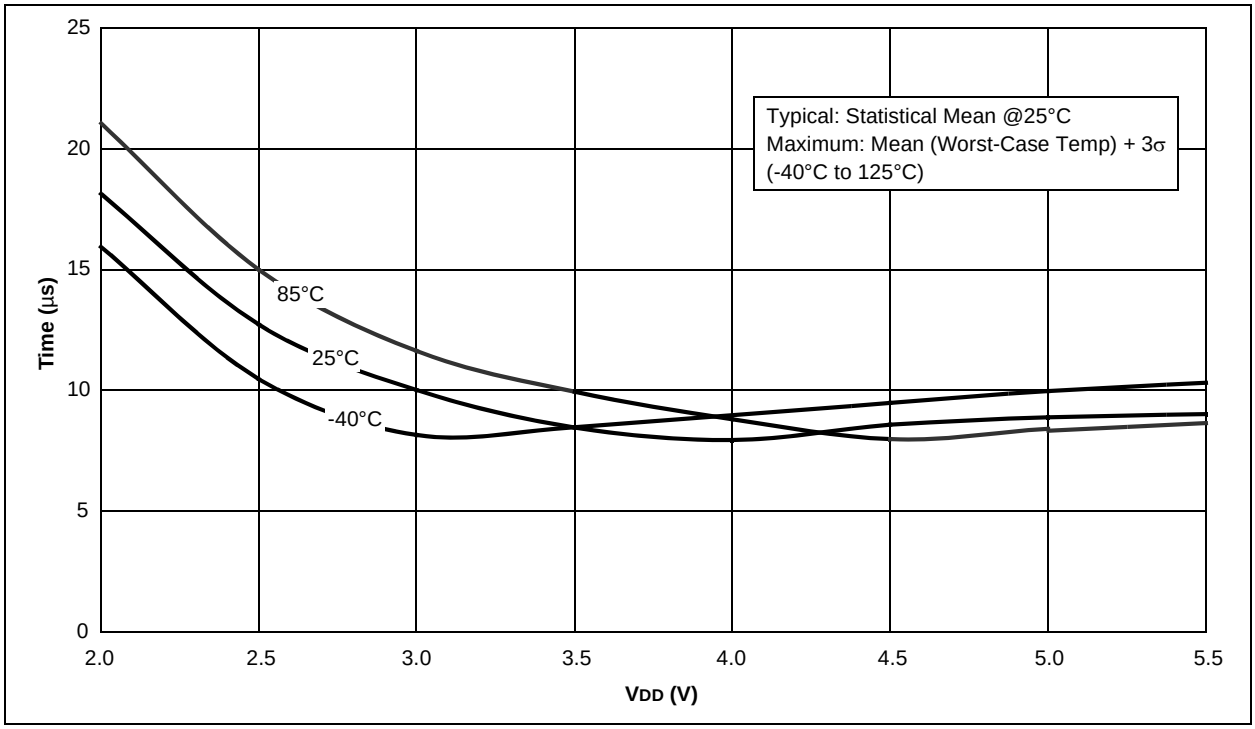

FIGURE 17-42: MINIMUM HFINTOSC START-UP TIMES vs. VDD OVER TEMPERATURE

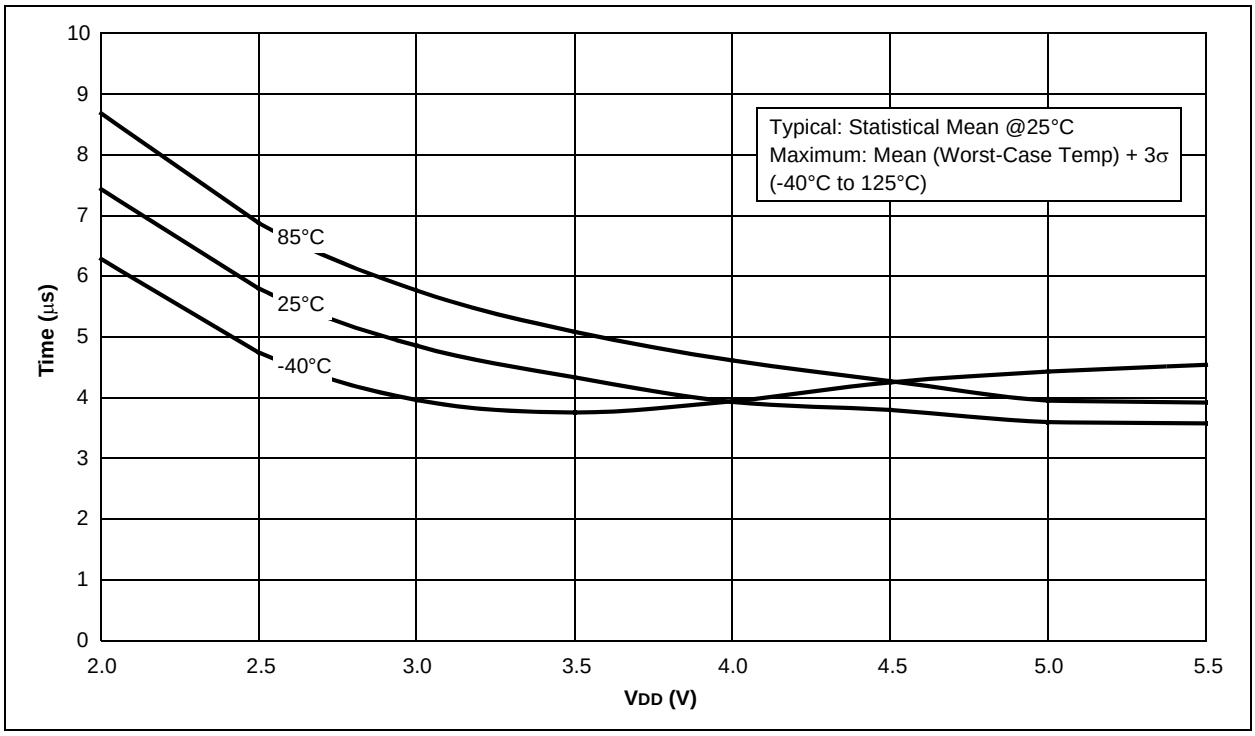

© 2010 Microchip Technology Inc.

FIGURE 17-43: TYPICAL HFINTOSC FREQUENCY CHANGE vs. VDD (25°C)

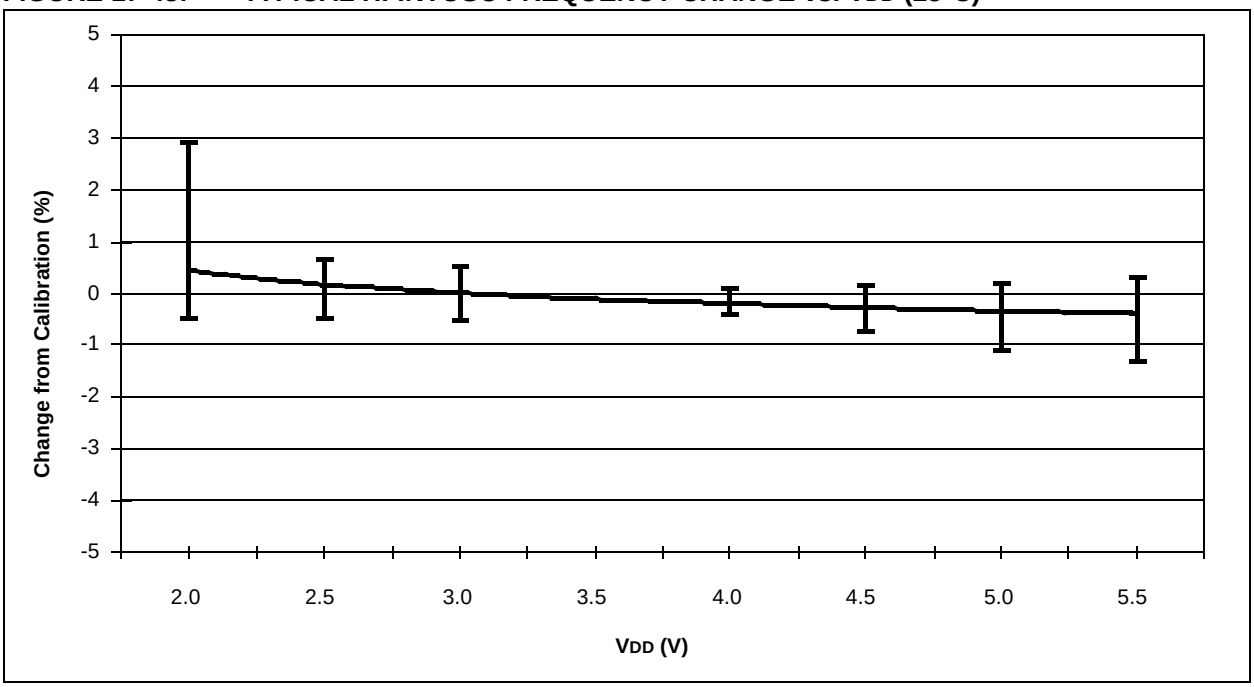

FIGURE 17-44: TYPICAL HFINTOSC FREQUENCY CHANGE vs. VDD (85°C)

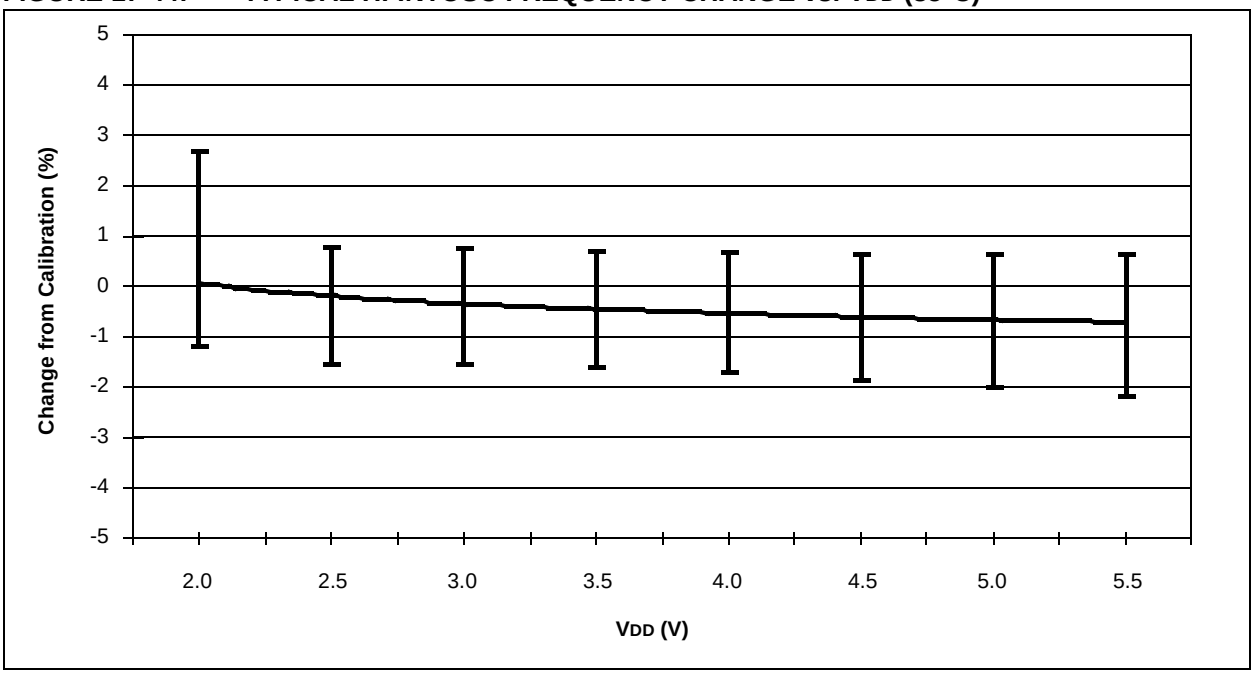

FIGURE 17-45: TYPICAL HFINTOSC FREQUENCY CHANGE vs. VDD (125°C)

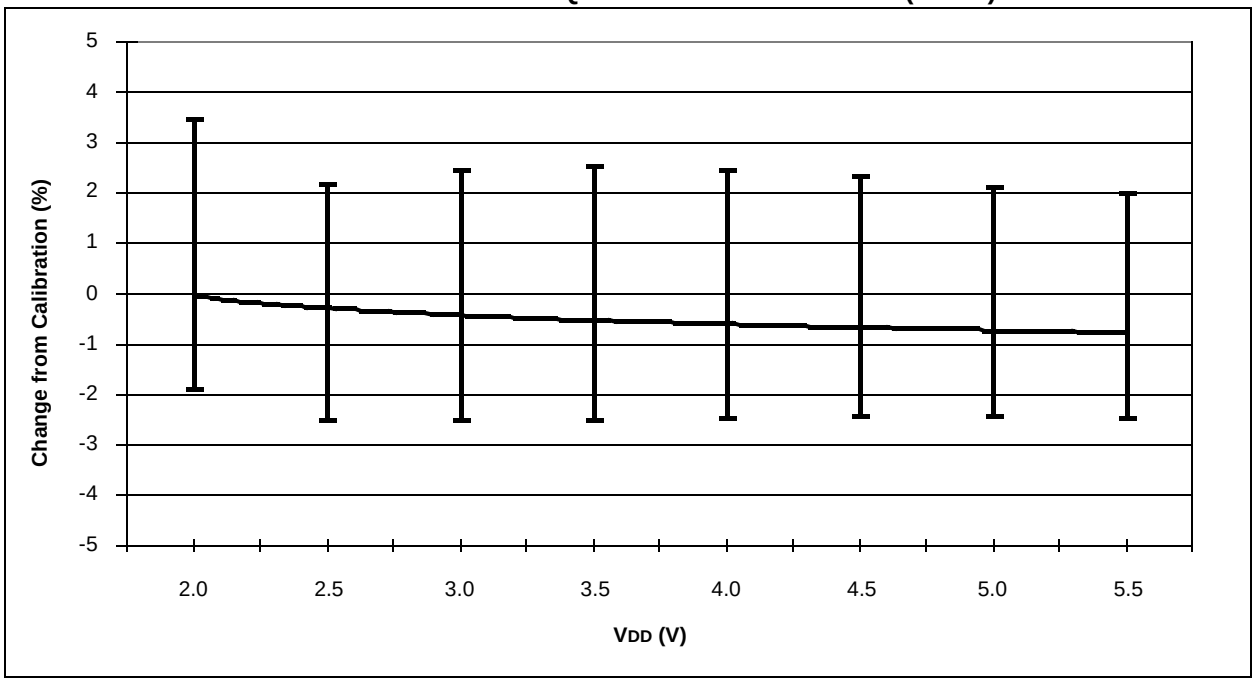

FIGURE 17-46: TYPICAL HFINTOSC FREQUENCY CHANGE vs. VDD (-40°C)

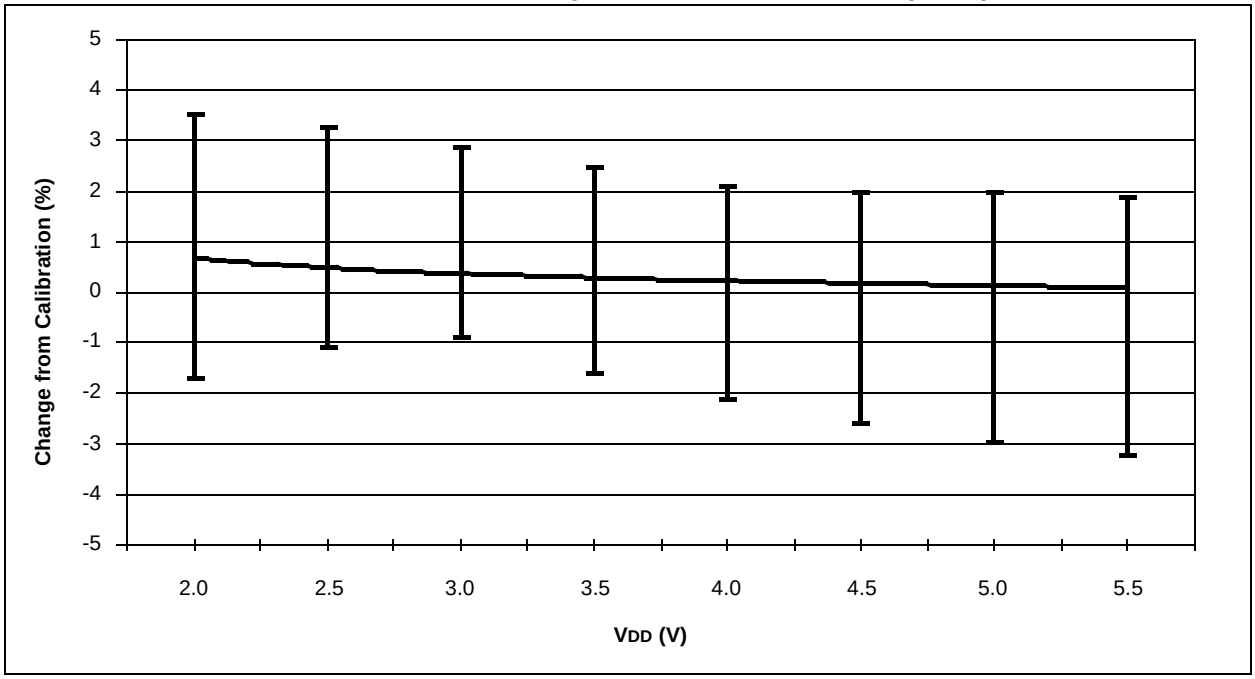

© 2010 Microchip Technology Inc.

FIGURE 17-47: 0.6V REFERENCE VOLTAGE vs. TEMP (TYPICAL)

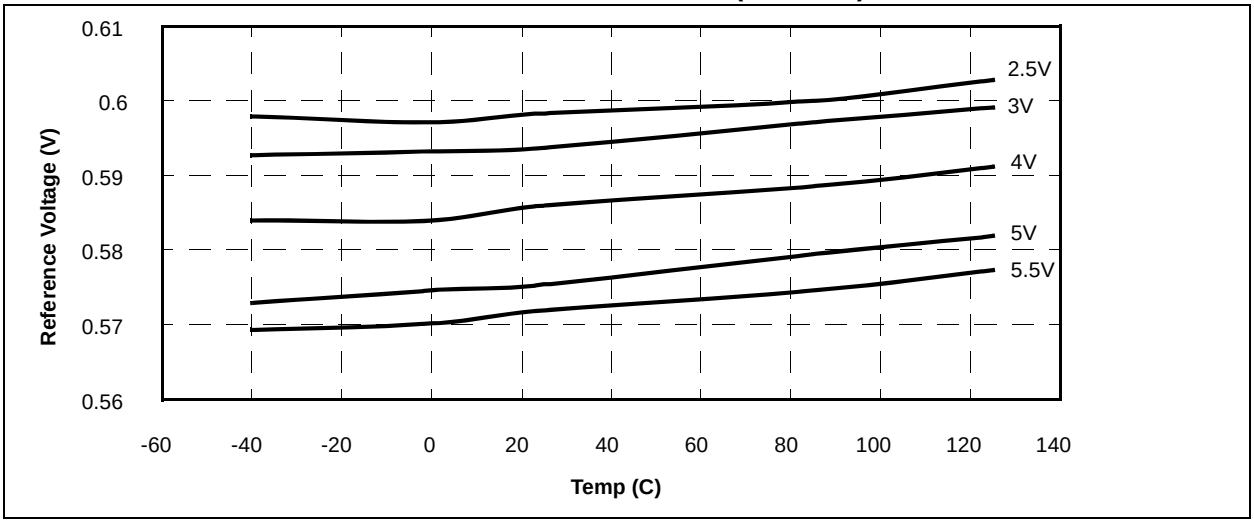

FIGURE 17-48: 1.2V REFERENCE VOLTAGE vs. TEMP (TYPICAL)

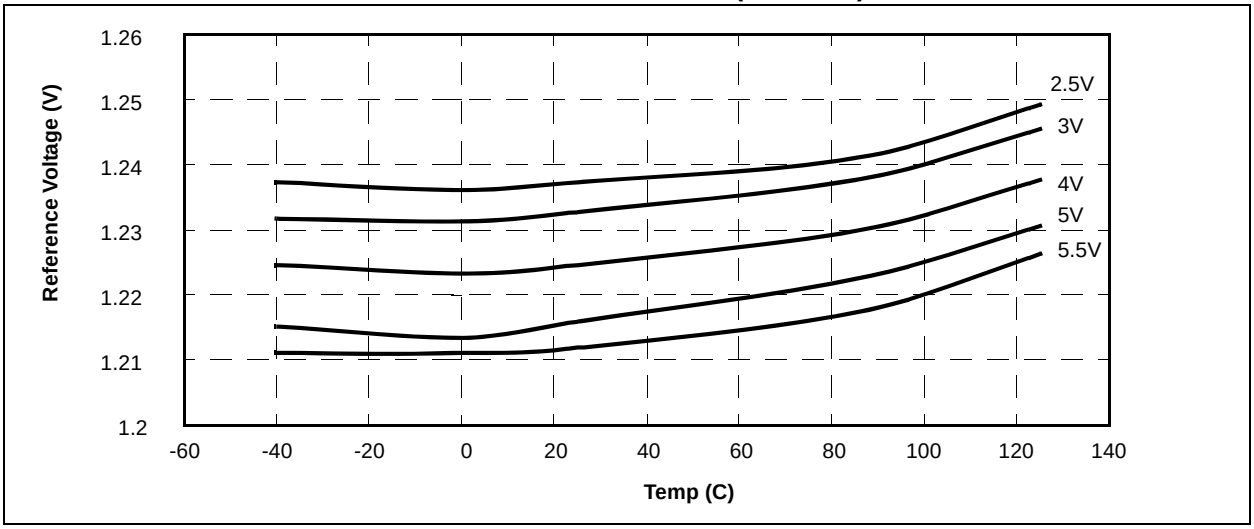

FIGURE 17-49: SHUNT REGULATOR VOLTAGE vs. INPUT CURRENT (TYPICAL)

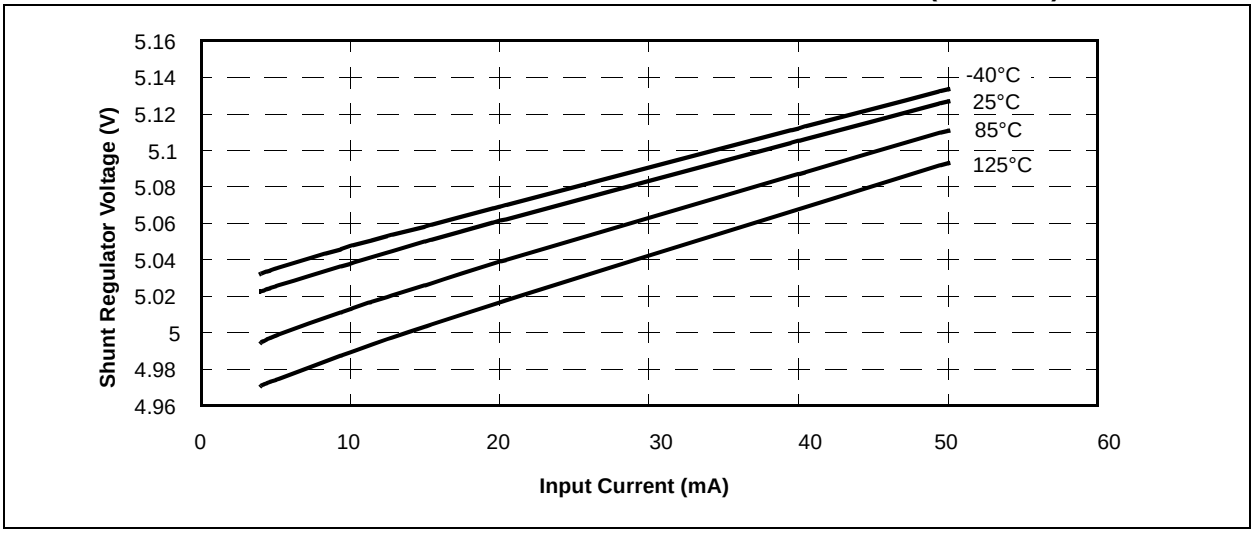

FIGURE 17-50: SHUNT REGULATOR VOLTAGE vs. TEMP (TYPICAL)

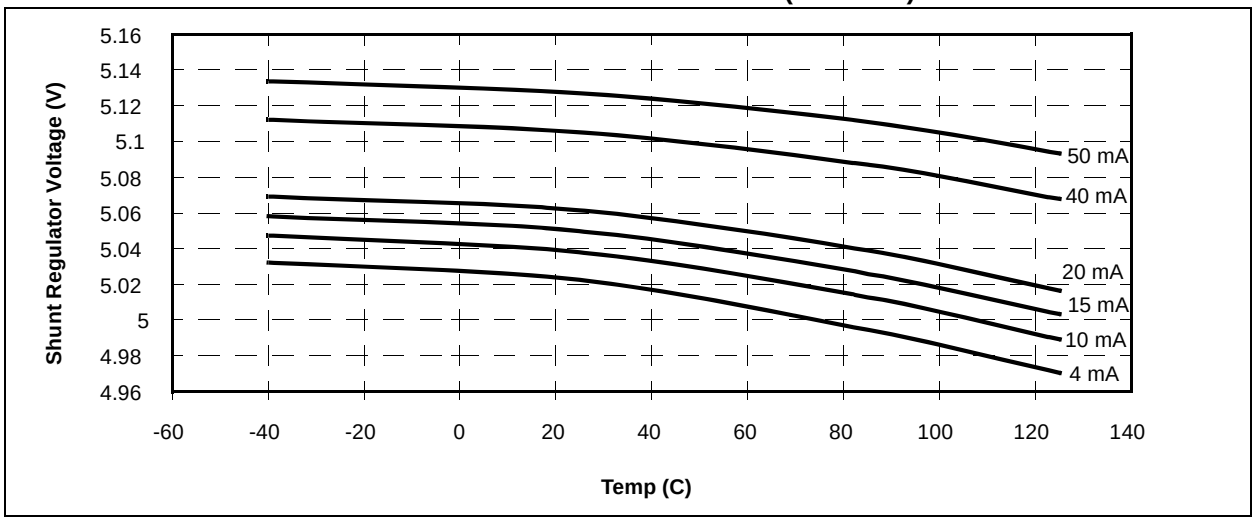

FIGURE 17-51: COMPARATOR RESPONSE TIME (RISING EDGE)

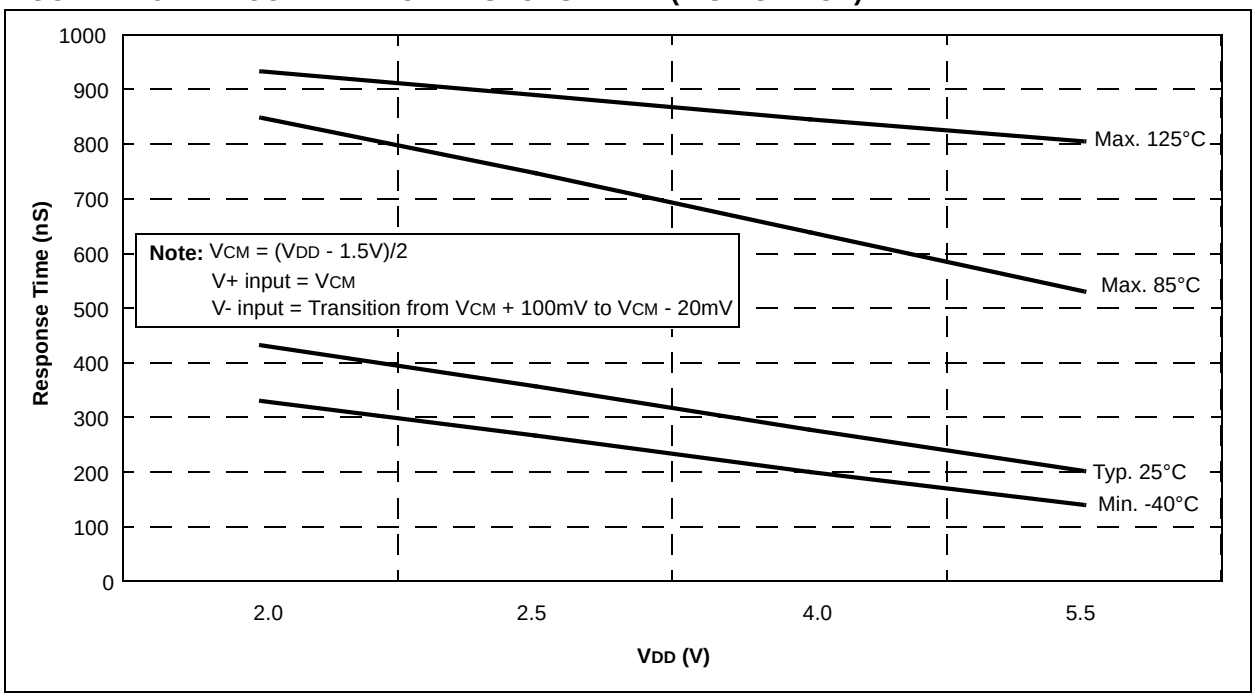

© 2010 Microchip Technology Inc.

FIGURE 17-52: COMPARATOR RESPONSE TIME (FALLING EDGE)

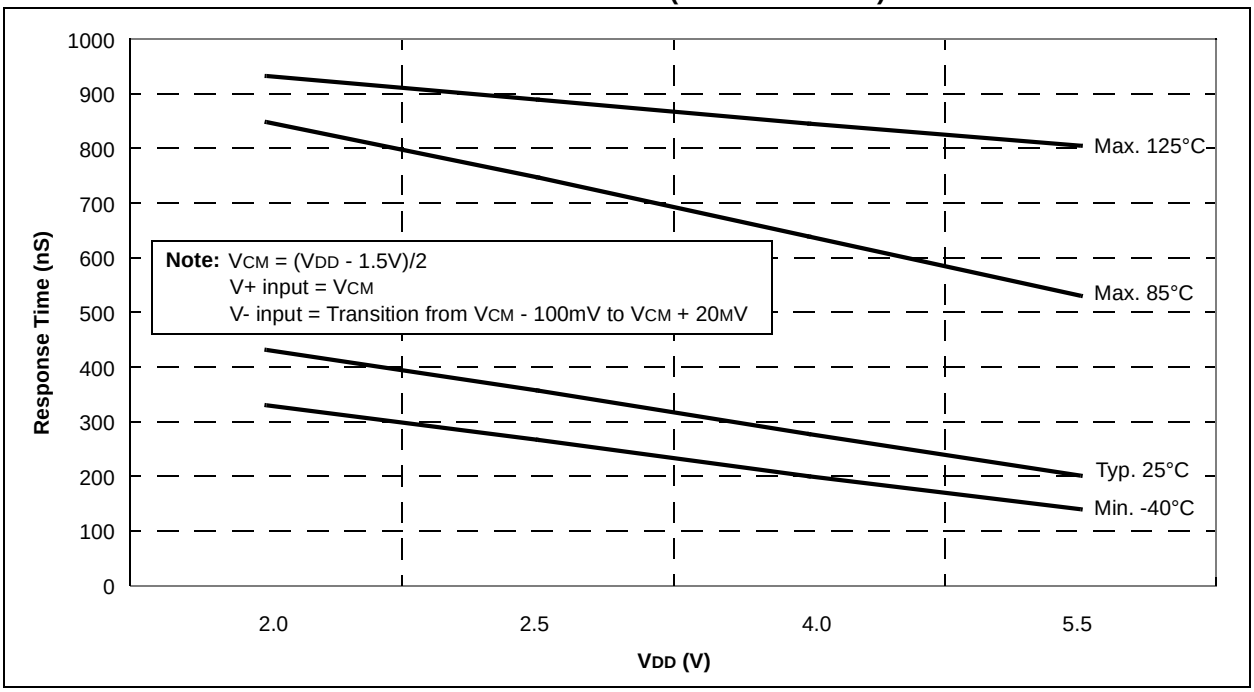

FIGURE 17-53: WDT TIME-OUT PERIOD vs. VDD OVER TEMPERATURE

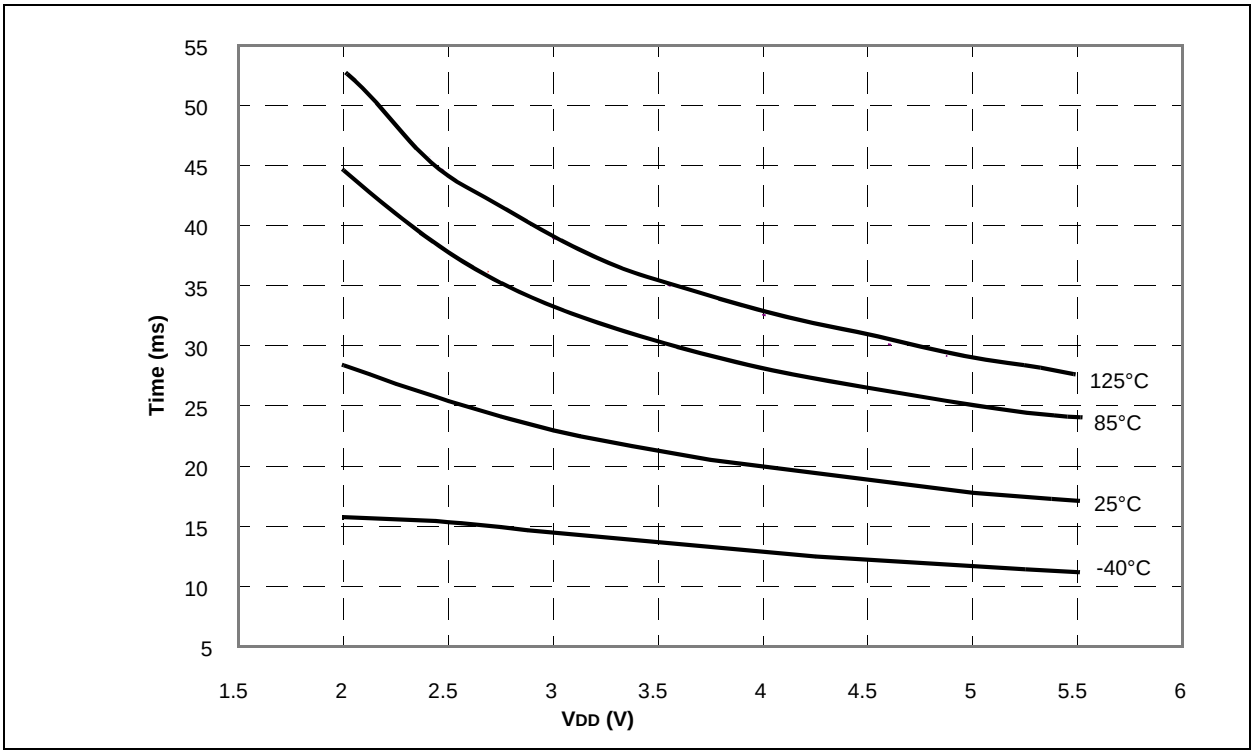

NOTES:

© 2010 Microchip Technology Inc.

18.0 PACKAGING INFORMATION

18.1 Package Marking Information

8-Lead PDIP (.300”)

Example

8-Lead SOIC (.150”)

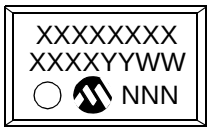

Example

8-Lead MSOP

Example

8-Lead DFN (3x3 mm)

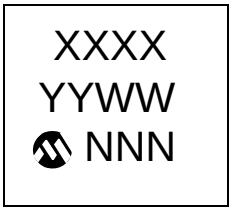

Example

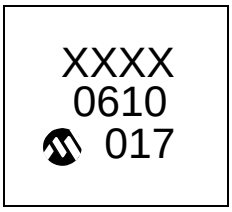

8-Lead DFN (4x4 mm) (for PIC12F609/615/HV609/615 devices only)

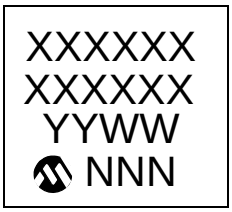

Example

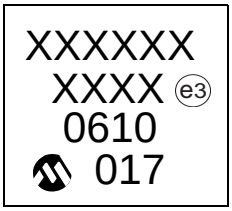

Legend:	XX...X	Customer-specific information
	Y	Year code (last digit of calendar year)
	YY	Year code (last 2 digits of calendar year)
	WW	Week code (week of January 1 is week ‘01’)
	NNN	Alphanumeric traceability code
	e3	Pb-free JEDEC designator for Matte Tin (Sn)
	*	This package is Pb-free. The Pb-free JEDEC designator (e3) can be found on the outer packaging for this package.

Note: In the event the full Microchip part number cannot be marked on one line, it will be carried over to the next line, thus limiting the number of available characters for customer-specific information.

* Standard PIC device marking consists of Microchip part number, year code, week code, and traceability code. For PIC device marking beyond this, certain price adders apply. Please check with your Microchip Sales Office. For QTP devices, any special marking adders are included in QTP price.

18.2 Package Details

The following sections give the technical details of the packages.

8-Lead Plastic Dual In-Line (P) – 300 mil Body [PDIP]

Note: For the most current package drawings, please see the Microchip Packaging Specification located at http://www.microchip.com/packaging

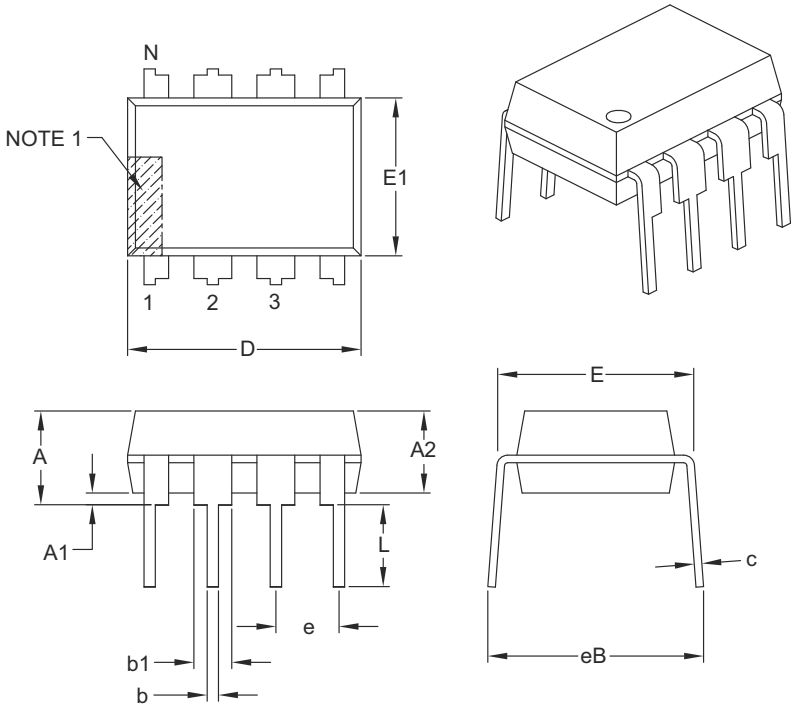

Units		INCHES		
Dimension Limits		MIN	NOM	MAX
Number of Pins	N	8		
Pitch	e	.100 BSC		
Top to Seating Plane	A	–	–	.210
Molded Package Thickness	A2	.115	.130	.195
Base to Seating Plane	A1	.015	–	–
Shoulder to Shoulder Width	E	.290	.310	.325
Molded Package Width	E1	.240	.250	.280
Overall Length	D	.348	.365	.400
Tip to Seating Plane	L	.115	.130	.150
Lead Thickness	c	.008	.010	.015
Upper Lead Width	b1	.040	.060	.070
Lower Lead Width	b	.014	.018	.022
Overall Row Spacing §	eB	–	–	.430

Notes:

1. Pin 1 visual index feature may vary, but must be located with the hatched area.
2. § Significant Characteristic.
3. Dimensions D and E1 do not include mold flash or protrusions. Mold flash or protrusions shall not exceed .010" per side.
4. Dimensioning and tolerancing per ASME Y14.5M.
   BSC: Basic Dimension. Theoretically exact value shown without tolerances.

Microchip Technology Drawing C04-018B

© 2010 Microchip Technology Inc.

8-Lead Plastic Small Outline (SN) – Narrow, 3.90 mm Body [SOIC]

Note: For the most current package drawings, please see the Microchip Packaging Specification located at http://www.microchip.com/packaging

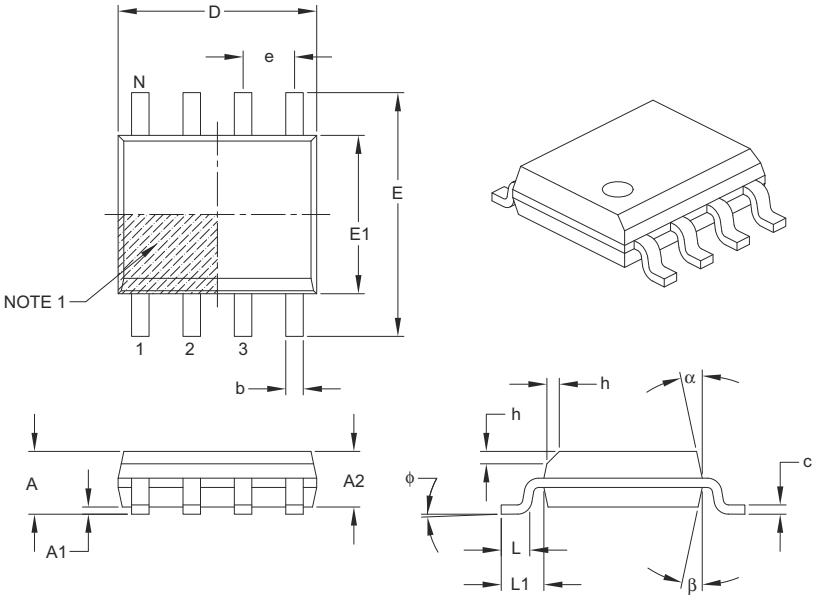

Units		MILLIMETERS		
Dimension Limits		MIN	NOM	MAX
Number of Pins	N	8		
Pitch	e	1.27 BSC		
Overall Height	A	–	–	1.75
Molded Package Thickness	A2	1.25	–	–
Standoff §	A1	0.10	–	0.25
Overall Width	E	6.00 BSC		
Molded Package Width	E1	3.90 BSC		
Overall Length	D	4.90 BSC		
Chamfer (optional)	h	0.25	–	0.50
Foot Length	L	0.40	–	1.27
Footprint	L1	1.04 REF		
Foot Angle	φ	0°	–	8°
Lead Thickness	c	0.17	–	0.25
Lead Width	b	0.31	–	0.51
Mold Draft Angle Top	α	5°	–	15°
Mold Draft Angle Bottom	β	5°	–	15°

Notes:

1. Pin 1 visual index feature may vary, but must be located within the hatched area.
2. § Significant Characteristic.
3. Dimensions D and E1 do not include mold flash or protrusions. Mold flash or protrusions shall not exceed 0.15 mm per side.
4. Dimensioning and tolerancing per ASME Y14.5M.

   BSC: Basic Dimension. Theoretically exact value shown without tolerances.

   REF: Reference Dimension, usually without tolerance, for information purposes only.

Microchip Technology Drawing C04-057B

8-Lead Plastic Small Outline (SN) – Narrow, 3.90 mm Body [SOIC]

Note: For the most current package drawings, please see the Microchip Packaging Specification located at http://www.microchip.com/packaging

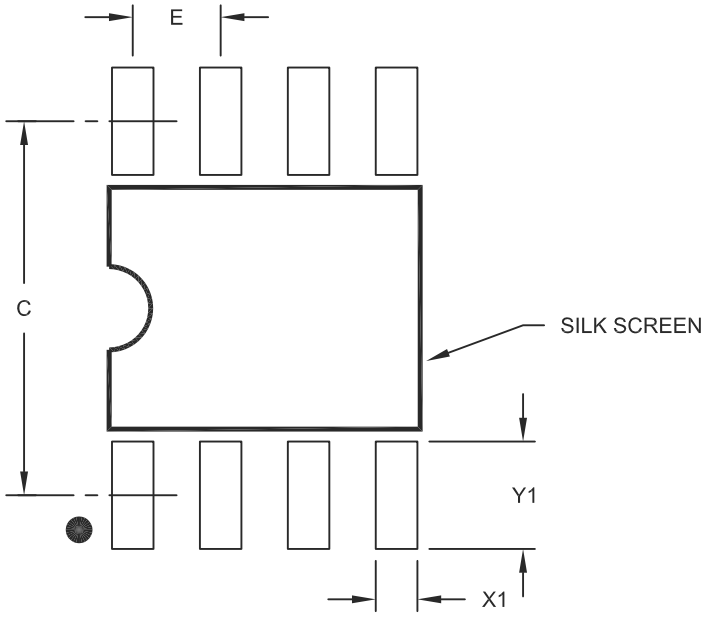

RECOMMENDED LAND PATTERN

Units		MILLIMETERS		
Dimension Limits		MIN	NOM	MAX
Contact Pitch	E		1.27 BSC	
Contact Pad Spacing	C		5.40	
Contact Pad Width (X8)	X1			0.60
Contact Pad Length (X8)	Y1			1.55

Notes:

1. Dimensioning and tolerancing per ASME Y14.5M
   BSC: Basic Dimension. Theoretically exact value shown without tolerances.

Microchip Technology Drawing No. C04-2057A

© 2010 Microchip Technology Inc.

8-Lead Plastic Micro Small Outline Package (MS) [MSOP]

Note: For the most current package drawings, please see the Microchip Packaging Specification located at http://www.microchip.com/packaging

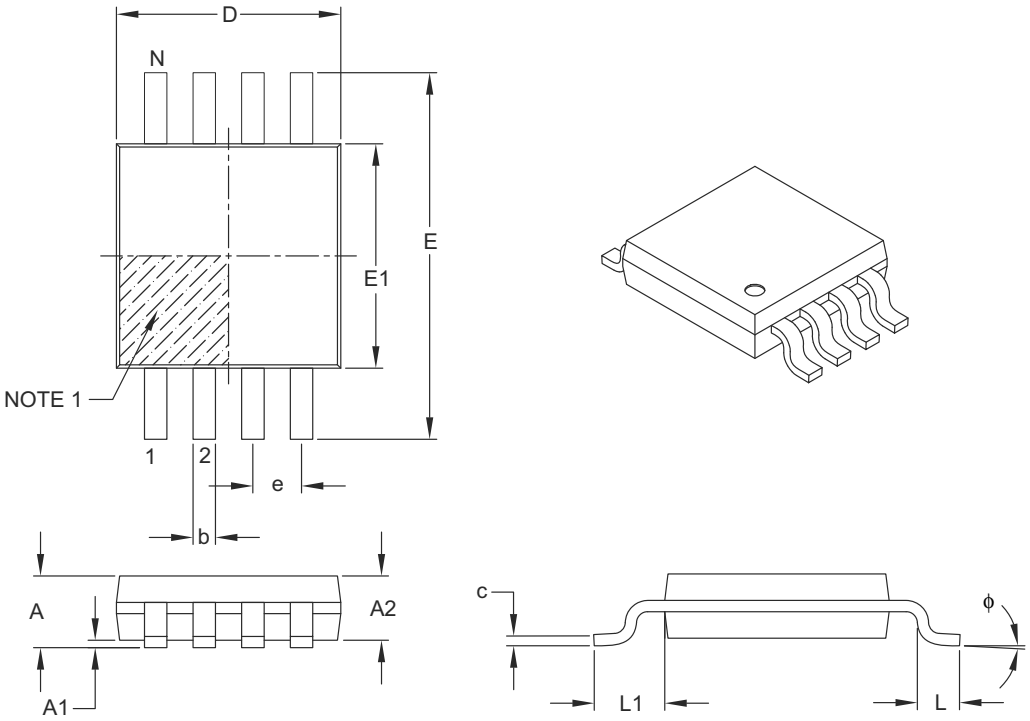

Units		MILLIMETERS		
Dimension Limits		MIN	NOM	MAX
Number of Pins	N	8		
Pitch	e	0.65 BSC		
Overall Height	A	–	–	1.10
Molded Package Thickness	A2	0.75	0.85	0.95
Standoff	A1	0.00	–	0.15
Overall Width	E	4.90 BSC		
Molded Package Width	E1	3.00 BSC		
Overall Length	D	3.00 BSC		
Foot Length	L	0.40	0.60	0.80
Footprint	L1	0.95 REF		
Foot Angle	ϕ	0°	–	8°
Lead Thickness	c	0.08	–	0.23
Lead Width	b	0.22	–	0.40

Notes:

1. Pin 1 visual index feature may vary, but must be located within the hatched area.
2. Dimensions D and E1 do not include mold flash or protrusions. Mold flash or protrusions shall not exceed 0.15 mm per side.
3. Dimensioning and tolerancing per ASME Y14.5M.

   BSC: Basic Dimension. Theoretically exact value shown without tolerances.

   REF: Reference Dimension, usually without tolerance, for information purposes only.

Microchip Technology Drawing C04-111B

8-Lead Plastic Dual Flat, No Lead Package (MF) – 3x3x0.9 mm Body [DFN]

Note: For the most current package drawings, please see the Microchip Packaging Specification located at http://www.microchip.com/packaging

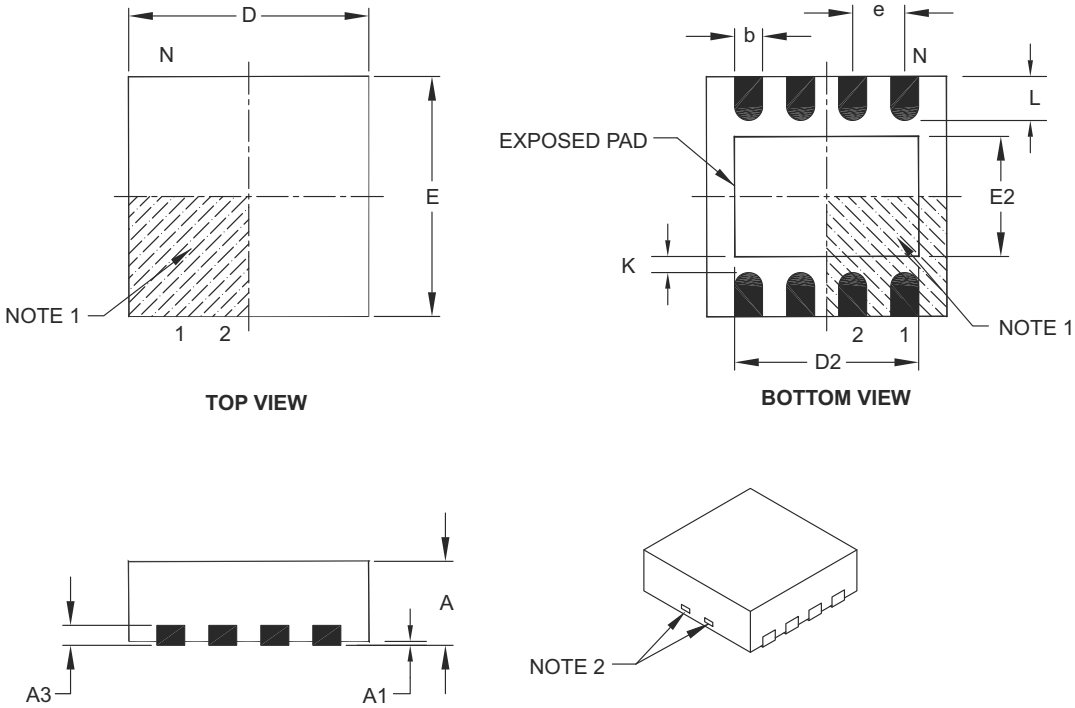

Units		MILLIMETERS		
Dimension Limits		MIN	NOM	MAX
Number of Pins	N	8		
Pitch	e	0.65 BSC		
Overall Height	A	0.80	0.90	1.00
Standoff	A1	0.00	0.02	0.05
Contact Thickness	A3	0.20 REF		
Overall Length	D	3.00 BSC		
Exposed Pad Width	E2	0.00	–	1.60
Overall Width	E	3.00 BSC		
Exposed Pad Length	D2	0.00	–	2.40
Contact Width	b	0.25	0.30	0.35
Contact Length	L	0.20	0.30	0.55
Contact-to-Exposed Pad	K	0.20	–	–

Notes:

1. Pin 1 visual index feature may vary, but must be located within the hatched area.
2. Package may have one or more exposed tie bars at ends.
3. Package is saw singulated.
4. Dimensioning and tolerancing per ASME Y14.5M.

   BSC: Basic Dimension. Theoretically exact value shown without tolerances.
   REF: Reference Dimension, usually without tolerance, for information purposes only.

Microchip Technology Drawing C04-062B

© 2010 Microchip Technology Inc.

8-Lead Plastic Dual Flat, No Lead Package (MD) – 4x4x0.9 mm Body [DFN]

Note: For the most current package drawings, please see the Microchip Packaging Specification located at http://www.microchip.com/packaging

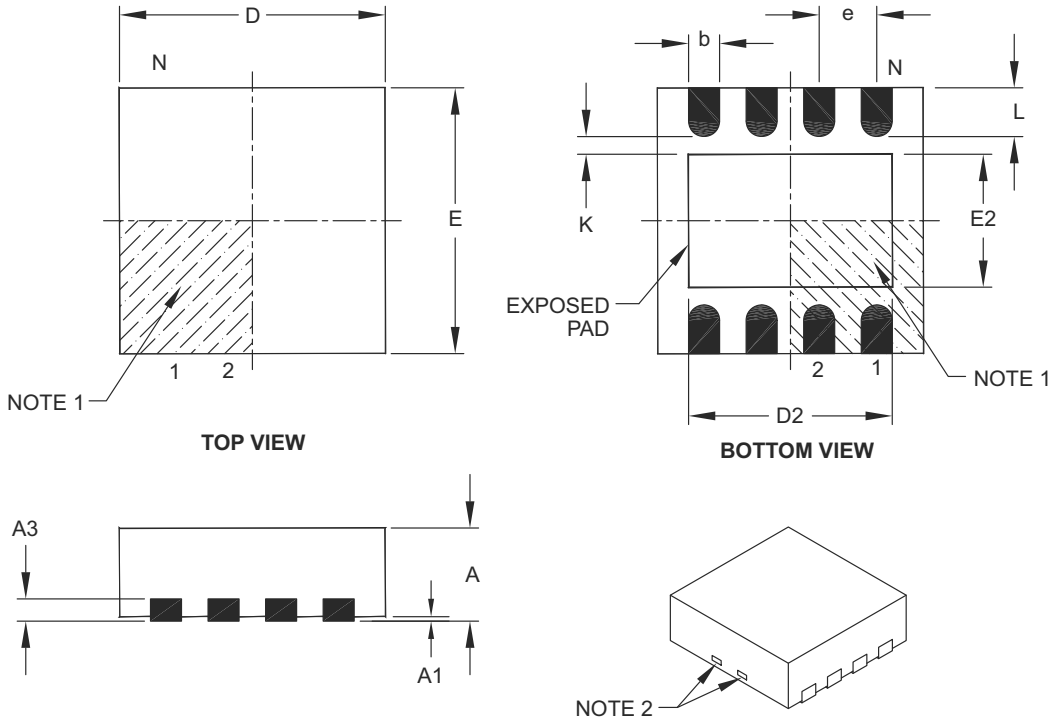

Units		MILLIMETERS		
Dimension Limits		MIN	NOM	MAX
Number of Pins	N	8		
Pitch	e	0.80 BSC		
Overall Height	A	0.80	0.90	1.00
Standoff	A1	0.00	0.02	0.05
Contact Thickness	A3	0.20 REF		
Overall Length	D	4.00 BSC		
Exposed Pad Width	E2	0.00	2.20	2.80
Overall Width	E	4.00 BSC		
Exposed Pad Length	D2	0.00	3.00	3.60
Contact Width	b	0.25	0.30	0.35
Contact Length	L	0.30	0.40	0.50
Contact-to-Exposed Pad	K	0.20	–	–

Notes:

1. Pin 1 visual index feature may vary, but must be located within the hatched area.
2. Package may have one or more exposed tie bars at ends.
3. Package is saw singulated.
4. Dimensioning and tolerancing per ASME Y14.5M.
   BSC: Basic Dimension. Theoretically exact value shown without tolerances.
   REF: Reference Dimension, usually without tolerance, for information purposes only.

Microchip Technology Drawing C04-131D

8-Lead Plastic Dual Flat, No Lead Package (MD) – 4x4x0.9 mm Body [DFN]

Note: For the most current package drawings, please see the Microchip Packaging Specification located at http://www.microchip.com/packaging

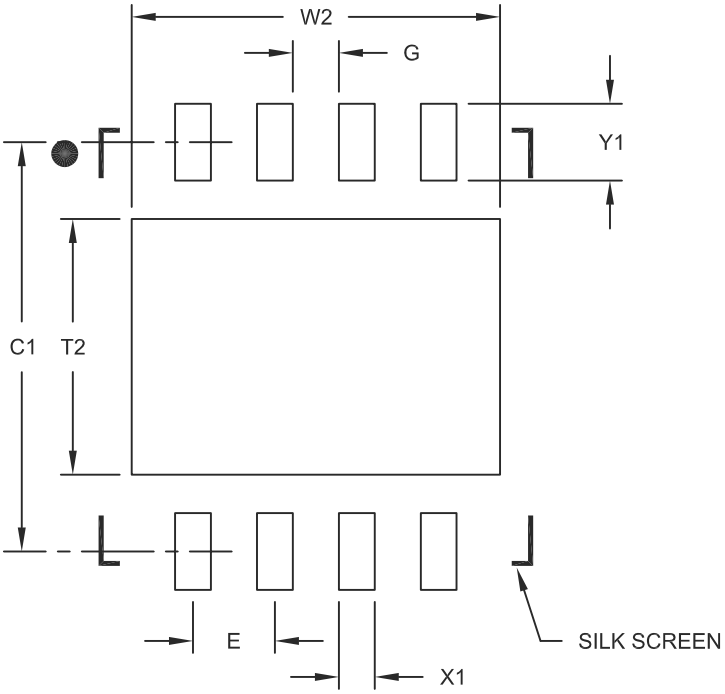

RECOMMENDED LAND PATTERN

Units		MILLIMETERS		
Dimension Limits		MIN	NOM	MAX
Contact Pitch	E	0.80 BSC		
Optional Center Pad Width	W2			3.60
Optional Center Pad Length	T2			2.50
Contact Pad Spacing	C1		4.00	
Contact Pad Width (X8)	X1			0.35
Contact Pad Length (X8)	Y1			0.75
Distance Between Pads	G	0.45		

Notes:

1. Dimensioning and tolerancing per ASME Y14.5M
   BSC: Basic Dimension. Theoretically exact value shown without tolerances.

Microchip Technology Drawing No. C04-2131B

© 2010 Microchip Technology Inc.

APPENDIX A: DATA SHEET REVISION HISTORY

Revision A

This is a new data sheet.

Revision B (05/2008)

Added Graphs. Revised 28-Pin ICD Pinout, Electrical Specifications Section, Package Details.

Revision C (09/2009)

Updated adding the PIC12F617 device throughout the entire data sheet; Added Figure 2-2 to Memory Organization section; Added section 3 ”FLASH PROGRAM MEMORY SELF READ/SELF WRITE CONTROL (FOR PIC12F617 ONLY)”; Updated Register 12-1; Updated Table12-5 adding PMCON1, PMCON2, PMADRL, PMADRH, PMDATL, PMDATH; Added section 16-12 in the Electrical Specification section; Other minor edits.

Revision D (01/2010)

Updated Figure 17-50; Revised 16.8 DC Characteristics; Removed Preliminary Status.

APPENDIX B: MIGRATING FROM OTHER PIC® DEVICES

This discusses some of the issues in migrating from other PIC devices to the PIC12F6XX Family of devices.

B.1 PIC12F675 to PIC12F609/615/ 12HV609/615

TABLE B-1: FEATURE COMPARISON

Feature	PIC12F675	PIC12F609/ 615/ 12HV609/615
Max Operating Speed	20 MHz	20 MHz
Max Program Memory (Words)	1024	1024
SRAM (bytes)	64	64
A/D Resolution	10-bit	10-bit (615 only)
Timers (8/16-bit)	1/1	2/1 (615) 1/1 (609)
Oscillator Modes	8	8
Brown-out Reset	Y	Y
Internal Pull-ups	RA0/1/2/4/5	GP0/1/2/4/5, $\overline{\text{MCLR}}$
Interrupt-on-change	RA0/1/2/3/4/5	GP0/1/2/3/4/5
Comparator	1	1
ECCP	N	Y (615)
INTOSC Frequencies	4 MHz	4/8 MHz
Internal Shunt Regulator	N	Y (PIC12HV609/ 615)

Note: This device has been designed to perform to the parameters of its data sheet. It has been tested to an electrical specification designed to determine its conformance with these parameters. Due to process differences in the manufacture of this device, this device may have different performance characteristics than its earlier version. These differences may cause this device to perform differently in your application than the earlier version of this device.

NOTES:

© 2010 Microchip Technology Inc.

INDEX

A

A/D
- Specifications ... 164, 165

Absolute Maximum Ratings ... 143
AC Characteristics
- Industrial and Extended ... 156
- Load Conditions ... 155

ADC
- Acquisition Requirements ... 86
- Associated registers ... 88
- Block Diagram ... 79
- Calculating Acquisition Time ... 86
- Channel Selection ... 80
- Configuration ... 80
- Configuring Interrupt ... 83
- Conversion Clock ... 80
- Conversion Procedure ... 83
- Internal Sampling Switch (RSS) Impedance ... 86
- Interrupts ... 81
- Operation ... 82
- Operation During Sleep ... 82
- Port Configuration ... 80
- Reference Voltage (VREF) ... 80
- Result Formatting ... 82
- Source Impedance ... 86
- Special Event Trigger ... 82
- Starting an A/D Conversion ... 82

ADC (PIC12F615/617/HV615 Only) ... 79
ADCON0 Register ... 84
ADRESH Register (ADFM = 0) ... 85
ADRESH Register (ADFM = 1) ... 85
ADRESL Register (ADFM = 0) ... 85
ADRESL Register (ADFM = 1) ... 85
Analog Input Connection Considerations ... 68
Analog-to-Digital Converter. *See* ADC
ANSEL Register (PIC12F609/HV609) ... 45
ANSEL Register (PIC12F615/617/HV615) ... 45
APFCON Register ... 24
Assembler
- MPASM Assembler ... 140

B

Block Diagrams
- (CCP) Capture Mode Operation ... 90
- ADC ... 79
- ADC Transfer Function ... 87
- Analog Input Model ... 68, 87
- Auto-Shutdown ... 101
- CCP PWM ... 94
- Clock Source ... 37
- Comparator ... 67
- Compare ... 92
- Crystal Operation ... 39
- External RC Mode ... 40
- GP0 and GP1 Pins ... 47
- GP2 Pins ... 48
- GP3 Pin ... 49
- GP4 Pin ... 50
- GP5 Pin ... 51
- In-Circuit Serial Programming Connections ... 125
- Interrupt Logic ... 119
- MCLR Circuit ... 111
- On-Chip Reset Circuit ... 110
- PIC12F609/12HV609 ... 7
- PIC12F615/617/12HV615 ... 8
- PWM (Enhanced) ... 97
- Resonator Operation ... 39
- Timer1 ... 57, 58
- Timer2 ... 65
- TMR0/WDT Prescaler ... 53
- Watchdog Timer ... 122

Brown-out Reset (BOR) ... 112
- Associated Registers ... 113
- Specifications ... 160
- Timing and Characteristics ... 159

C

C Compilers
- MPLAB C18 ... 140
- MPLAB C30 ... 140

Calibration Bits ... 109
Capture Module. *See* Enhanced Capture/Compare/PWM (ECCP)
Capture/Compare/PWM (CCP)
- Associated registers w/ Capture ... 91
- Associated registers w/ Compare ... 93
- Associated registers w/ PWM ... 105
- Capture Mode ... 90
- CCP1 Pin Configuration ... 90
- Compare Mode ... 92
  - CCP1 Pin Configuration ... 92
  - Software Interrupt Mode ... 90, 92
  - Special Event Trigger ... 92
  - Timer1 Mode Selection ... 90, 92
- Prescaler ... 90
- PWM Mode ... 94
  - Duty Cycle ... 95
  - Effects of Reset ... 96
  - Example PWM Frequencies and Resolutions, 20 MHZ ... 95
  - Example PWM Frequencies and Resolutions, 8 MHz ... 95
  - Operation in Sleep Mode ... 96
  - Setup for Operation ... 96
  - System Clock Frequency Changes ... 96
- PWM Period ... 95
- Setup for PWM Operation ... 96

CCP1CON (Enhanced) Register ... 89
Clock Sources
- External Modes ... 38
  - EC ... 38
  - HS ... 39
  - LP ... 39
  - OST ... 38
  - RC ... 40
  - XT ... 39
- Internal Modes ... 40
  - INTOSC ... 40
  - INTOSCIO ... 40

CMCON0 Register ... 72
CMCON1 Register ... 73
Code Examples
- A/D Conversion ... 83
- Assigning Prescaler to Timer0 ... 54
- Assigning Prescaler to WDT ... 54
- Changing Between Capture Prescalers ... 90
- Indirect Addressing ... 25

Initializing GPIO 43
Saving Status and W Registers in RAM 121
Writing to Flash Program Memory 34
Code Protection 124
Comparator 67
Associated registers 78
Control 69
Gating Timer1 73
Operation During Sleep 71
Overview 67
Response Time 69
Synchronizing COUT w/Timer1 73
Comparator Hysteresis 77
Comparator Voltage Reference (CVREF) 74
Effects of a Reset 71
Comparator Voltage Reference (CVREF)
Response Time 69
Comparator Voltage Reference (CVREF)
Specifications 163
Comparators
C2OUT as T1 Gate 60
Effects of a Reset 71
Specifications 162
Compare Module. *See* Enhanced Capture/Compare/
PWM (ECCP) (PIC12F615/617/HV615 only)
CONFIG Register 108
Configuration Bits 107
CPU Features 107
Customer Change Notification Service 209
Customer Notification Service 209
Customer Support 209

D

Data EEPROM Memory
Associated Registers 35
Data Memory 11
DC and AC Characteristics
Graphs and Tables 171
DC Characteristics
Extended and Industrial 152
Industrial and Extended 145
Development Support 139
Device Overview 7

E

ECCP. *See* Enhanced Capture/Compare/PWM
ECCPAS Register 102
EEDAT Register 28
EEDATH Register 28
Effects of Reset
PWM mode 96
Electrical Specifications 143
Enhanced Capture/Compare/PWM (ECCP)
Enhanced PWM Mode 97
Auto-Restart 103
Auto-shutdown 101
Half-Bridge Application 99
Half-Bridge Application Examples 104
Half-Bridge Mode 99
Output Relationships (Active-High and
Active-Low) 98
Output Relationships Diagram 98
Programmable Dead Band Delay 104
Shoot-through Current 104
Start-up Considerations 100
Specifications 162
Timer Resources 89
Enhanced Capture/Compare/PWM
(PIC12F615/617/HV615 Only) 89
Errata 6

F

Firmware Instructions 129
Flash Program Memory Self Read/Self Write
Control (For PIC12F617 only) 27
Fuses. *See* Configuration Bits

G

General Purpose Register File 12
GPIO 43
Additional Pin Functions 44
ANSEL Register 44
Interrupt-on-Change 44
Weak Pull-Ups 44
Associated registers 52
GP0 47
GP1 47
GP2 48
GP3 49
GP4 50
GP5 51
Pin Descriptions and Diagrams 47
Specifications 158
GPIO Register 43

H

High Temperature Operation 167

I

ID Locations 124
In-Circuit Debugger 125
In-Circuit Serial Programming (ICSP) 125
Indirect Addressing, INDF and FSR registers 25
Instruction Format 129
Instruction Set 129
ADDLW 131
ADDWF 131
ANDLW 131
ANDWF 131
MOVF 134
BCF 131
BSF 131
BTFSC 131
BTFSS 132
CALL 132
CLRF 132
CLRW 132
CLRWDT 132
COMF 132
DECF 132
DECFSZ 133
GOTO 133
INCF 133
INCFSZ 133
IORLW 133
IORWF 133
MOVLW 134
MOVWF 134
NOP 134
RETFIE 135
RETLW 135
RETURN 135

© 2010 Microchip Technology Inc.

RLF ... 136
RRF ... 136
SLEEP ... 136
SUBLW ... 136
SUBWF ... 137
SWAPF ... 137
XORLW ... 137
XORWF ... 137
Summary Table ... 130
INTCON Register ... 20
Internal Oscillator Block
INTOSC
Specifications ... 157, 158
Internal Sampling Switch (Rss) Impedance ... 86
Internet Address ... 209
Interrupts ... 118
ADC ... 83
Associated Registers ... 120
Context Saving ... 121
GP2/INT ... 118
GPIO Interrupt-on-Change ... 119
Interrupt-on-Change ... 44
Timer0 ... 119
TMR1 ... 60
INTOSC Specifications ... 157, 158
IOC Register ... 46

L

Load Conditions ... 155

M

MCLR ... 111
Internal ... 111
Memory Organization ... 11
Data ... 11
Program ... 11
Microchip Internet Web Site ... 209
Migrating from other PICmicro Devices ... 203
MPLAB ASM30 Assembler, Linker, Librarian ... 140
MPLAB ICD 2 In-Circuit Debugger ... 141
MPLAB ICE 2000 High-Performance Universal
In-Circuit Emulator ... 141
MPLAB Integrated Development Environment Software ... 139
MPLAB PM3 Device Programmer ... 141
MPLAB REAL ICE In-Circuit Emulator System ... 141
MPLINK Object Linker/MPLIB Object Librarian ... 140

O

OPCODE Field Descriptions ... 129
Operation During Code Protect ... 32
Operation During Write Protect ... 32
Operational Amplifier (OPA) Module
AC Specifications ... 163
OPTION Register ... 19
OPTION_REG Register ... 55
Oscillator
Associated registers ... 41, 63
Oscillator Module ... 27, 37
EC ... 37
HS ... 37
INTOSC ... 37
INTOSCIO ... 37
LP ... 37
RC ... 37
RCIO ... 37
XT ... 37
Oscillator Parameters ... 157
Oscillator Specifications ... 156
Oscillator Start-up Timer (OST)
Specifications ... 160
OSCTUNE Register ... 41

P

P1A/P1B/P1C/P1D. *See* Enhanced Capture/Compare/
PWM (ECCP) ... 97
Packaging ... 195
Marking ... 195
PDIP Details ... 196
PCL and PCLATH ... 25
Stack ... 25
PCON Register ... 23, 113
PICSTART Plus Development Programmer ... 142
PIE1 Register ... 21
Pin Diagram
PIC12F609/HV609 (PDIP, SOIC, MSOP, DFN) ... 4
PIC12F615/617/HV615 (PDIP, SOIC, MSOP, DFN) ... 5
Pinout Descriptions
PIC12F609/12HV609 ... 9
PIC12F615/617/12HV615 ... 10
PIR1 Register ... 22
PMADRH and PMADRL Registers ... 27
PMCON1 and PMCON2 Registers ... 27
Power-Down Mode (Sleep) ... 123
Power-on Reset (POR) ... 111
Power-up Timer (PWRT) ... 111
Specifications ... 160
Precision Internal Oscillator Parameters ... 158
Prescaler
Shared WDT/Timer0 ... 54
Switching Prescaler Assignment ... 54
Program Memory ... 11
Map and Stack ... 11
Programming, Device Instructions ... 129
Protection Against Spurious Write ... 32
PWM Mode. *See* Enhanced Capture/Compare/PWM ... 97
PWM1CON Register ... 105

R

Reader Response ... 210
Reading the Flash Program Memory ... 30
Read-Modify-Write Operations ... 129
Registers
ADCON0 (ADC Control 0) ... 84
ADRESH (ADC Result High) with ADFM = 0) ... 85
ADRESH (ADC Result High) with ADFM = 1) ... 85
ADRESL (ADC Result Low) with ADFM = 0) ... 85
ADRESL (ADC Result Low) with ADFM = 1) ... 85
ANSEL (Analog Select) ... 45
APFCON (Alternate Pin Function Register) ... 24
CCP1CON (Enhanced CCP1 Control) ... 89
CMCON0 (Comparator Control 0) ... 72
CMCON1 (Comparator Control 1) ... 73
CONFIG (Configuration Word) ... 108
Data Memory Map (PIC12F609/HV609) ... 12
Data Memory Map (PIC12F615/617/HV615) ... 13
ECCPAS (Enhanced CCP Auto-shutdown Control) ... 102
EEDAT (EEPROM Data) ... 28
EEDATH (EEPROM Data) ... 28
GPIO ... 43
INTCON (Interrupt Control) ... 20
IOC (Interrupt-on-Change GPIO) ... 46
OPTION_REG (OPTION) ... 19

OPTION_REG (Option) 55
OSCTUNE (Oscillator Tuning) 41
PCON (Power Control Register) 23
PCON (Power Control) 113
PIE1 (Peripheral Interrupt Enable 1) 21
PIR1 (Peripheral Interrupt Register 1) 22
PWM1CON (Enhanced PWM Control) 105
Reset Values (PIC12F609/HV609) 115
Reset Values (PIC12F615/617/HV615) 116
Reset Values (special registers) 117
Special Function Registers 12
Special Register Summary (PIC12F609/HV609) .. 14, 16
Special Register Summary
(PIC12F615/617/HV615) 15, 17
STATUS 18
T1CON 62
T2CON 66
TRISIO (Tri-State GPIO) 44
VRCON (Voltage Reference Control) 76
WPU (Weak Pull-Up GPIO) 46
Reset 110
Revision History 203

S

Shoot-through Current 104
Sleep
Power-Down Mode 123
Wake-up 123
Wake-up using Interrupts 123
Software Simulator (MPLAB SIM) 140
Special Event Trigger 82
Special Function Registers 12
STATUS Register 18

T

T1CON Register 62
T2CON Register 66
Thermal Considerations 154
Time-out Sequence 113
Timer0 53
Associated Registers 55
External Clock 54
Interrupt 55
Operation 53, 57
Specifications 161
T0CKI 54
Timer1 57
Associated registers 63
Asynchronous Counter Mode 59
Reading and Writing 59
Comparator Synchronization 61
ECCP Special Event Trigger
(PIC12F615/617/HV615 Only) 61
ECCP Time Base (PIC12F615/617/HV615 Only) 60
Interrupt 60
Modes of Operation 57
Operation During Sleep 60
Oscillator 59
Prescaler 59
Specifications 161
Timer1 Gate
Inverting Gate 60
Selecting Source 60, 73
Synchronizing COUT w/Timer1 73
TMR1H Register 57
TMR1L Register 57
Timer2 (PIC12F615/617/HV615 Only)
Associated registers 66
Timers
Timer1
T1CON 62
Timer2
T2CON 66
Timing Diagrams
A/D Conversion 165
A/D Conversion (Sleep Mode) 166
Brown-out Reset (BOR) 159
Brown-out Reset Situations 112
CLKOUT and I/O 158
Clock Timing 156
Comparator Output 67
Enhanced Capture/Compare/PWM (ECCP) 162
Half-Bridge PWM Output 99, 104
INT Pin Interrupt 120
PWM Auto-shutdown
Auto-restart Enabled 103
Firmware Restart 103
PWM Output (Active-High) 98
PWM Output (Active-Low) 98
Reset, WDT, OST and Power-up Timer 159
Time-out Sequence
Case 1 114
Case 2 114
Case 3 114
Timer0 and Timer1 External Clock 161
Timer1 Incrementing Edge 61
Wake-up from Interrupt 124
Timing Parameter Symbology 155
TRISIO 43
TRISIO Register 44

V

Voltage Reference (VR)
Specifications 163
Voltage Reference. *See* Comparator Voltage
Reference (CVREF)
Voltage References
Associated registers 78
VP6 Stabilization 74
VREF. *SEE* ADC Reference Voltage

W

Wake-up Using Interrupts 123
Watchdog Timer (WDT) 121
Associated registers 122
Specifications 160
WPU Register 46
Writing the Flash Program Memory 32
WWW Address 209
WWW, On-Line Support 6

© 2010 Microchip Technology Inc.

THE MICROCHIP WEB SITE

Microchip provides online support via our WWW site at www.microchip.com. This web site is used as a means to make files and information easily available to customers. Accessible by using your favorite Internet browser, the web site contains the following information:

- **Product Support** – Data sheets and errata, application notes and sample programs, design resources, user's guides and hardware support documents, latest software releases and archived software
- **General Technical Support** – Frequently Asked Questions (FAQ), technical support requests, online discussion groups, Microchip consultant program member listing
- **Business of Microchip** – Product selector and ordering guides, latest Microchip press releases, listing of seminars and events, listings of Microchip sales offices, distributors and factory representatives

CUSTOMER CHANGE NOTIFICATION SERVICE

Microchip's customer notification service helps keep customers current on Microchip products. Subscribers will receive e-mail notification whenever there are changes, updates, revisions or errata related to a specified product family or development tool of interest.

To register, access the Microchip web site at www.microchip.com, click on Customer Change Notification and follow the registration instructions.

CUSTOMER SUPPORT

Users of Microchip products can receive assistance through several channels:

- Distributor or Representative
- Local Sales Office
- Field Application Engineer (FAE)
- Technical Support
- Development Systems Information Line

Customers should contact their distributor, representative or field application engineer (FAE) for support. Local sales offices are also available to help customers. A listing of sales offices and locations is included in the back of this document.

Technical support is available through the web site at: http://support.microchip.com

READER RESPONSE

It is our intention to provide you with the best documentation possible to ensure successful use of your Microchip product. If you wish to provide your comments on organization, clarity, subject matter, and ways in which our documentation can better serve you, please FAX your comments to the Technical Publications Manager at (480) 792-4150.

Please list the following information, and use this outline to provide us with your comments about this document.

To: Technical Publications Manager Total Pages Sent _____

RE: Reader Response

From: Name _____

Company _____

Address _____

City / State / ZIP / Country _____

Telephone: (_____) _____ - _____ FAX: (_____) _____ - _____

Application (optional):

Would you like a reply?___Y ___N

Device: PIC12F609/615/617/12HV609/615 Literature Number: DS41302D

Questions:

1. What are the best features of this document?

_____

_____

2. How does this document meet your hardware and software development needs?

_____

_____

3. Do you find the organization of this document easy to follow? If not, why?

_____

_____

4. What additions to the document do you think would enhance the structure and subject?

_____

_____

5. What deletions from the document could be made without affecting the overall usefulness?

_____

_____

6. Is there any incorrect or misleading information (what and where)?

_____

_____

7. How would you improve this document?

_____

_____

© 2010 Microchip Technology Inc.

PRODUCT IDENTIFICATION SYSTEM

To order or obtain information, e.g., on pricing or delivery, refer to the factory or the listed sales office.

PART NO.	X	/XX	XXX
Device	Temperature Range	Package	Pattern

Device:	PIC12F609, PIC12F609T(1), PIC12HV609, PIC12HV609T(1), PIC12F615, PIC12F615T(1), PIC12HV615, PIC12HV615T(1), PIC12F617, PIC12F617T(1)			
Temperature Range:	H	=	-40°C to +150°C	(High Temp)(3)
	I	=	-40°C to +85°C	(Industrial)
	E	=	-40°C to +125°C	(Extended)
Package:	P	=	Plastic DIP (PDIP)	
	SN	=	8-lead Small Outline (150 mil) (SOIC)	
	MS	=	Micro Small Outline (MSOP)	
	MF	=	8-lead Plastic Dual Flat, No Lead (3x3) (DFN)	
	MD	=	8-lead Plastic Dual Flat, No Lead (4x4)(DFN)(1,2)	
Pattern:	QTP, SQTP or ROM Code; Special Requirements (blank otherwise)			

Examples:

a) PIC12F615-E/P 301 = Extended Temp., PDIP package, 20 MHz, QTP pattern #301
b) PIC12F615-I/SN = Industrial Temp., SOIC package, 20 MHz
c) PIC12F615T-E/MF = Tape and Reel, Extended Temp., 3x3 DFN, 20 MHz
d) PIC12F609T-E/MF = Tape and Reel, Extended Temp., 3x3 DFN, 20 MHz
e) PIC12HV615T-E/MF = Tape and Reel, Extended Temp., 3x3 DFN, 20 MHz
f) PIC12HV609T-E/MF = Tape and Reel, Extended Temp., 3x3 DFN, 20 MHz
g) PIC12F617T-E/MF = Tape and Reel, Extended Temp., 3x3 DFN, 20 MHz
h) PIC12F617-I/P = Industrial Temp., PDIP package, 20 MHz
i) PIC12F615-H/SN = High Temp., SOIC package, 20 MHz

Note 1: T = in tape and reel for MSOP, SOIC and DFN packages only.
2: Not available for PIC12F617.
3: High Temp. available for PIC12F615 only.

WORLDWIDE SALES AND SERVICE

AMERICAS

Corporate Office
2355 West Chandler Blvd.
Chandler, AZ 85224-6199
Tel: 480-792-7200
Fax: 480-792-7277
Technical Support:
http://support.microchip.com
Web Address:
www.microchip.com

Atlanta
Duluth, GA
Tel: 678-957-9614
Fax: 678-957-1455

Boston
Westborough, MA
Tel: 774-760-0087
Fax: 774-760-0088

Chicago
Itasca, IL
Tel: 630-285-0071
Fax: 630-285-0075

Cleveland
Independence, OH
Tel: 216-447-0464
Fax: 216-447-0643

Dallas
Addison, TX
Tel: 972-818-7423
Fax: 972-818-2924

Detroit
Farmington Hills, MI
Tel: 248-538-2250
Fax: 248-538-2260

Kokomo
Kokomo, IN
Tel: 765-864-8360
Fax: 765-864-8387

Los Angeles
Mission Viejo, CA
Tel: 949-462-9523
Fax: 949-462-9608

Santa Clara
Santa Clara, CA
Tel: 408-961-6444
Fax: 408-961-6445

Toronto
Mississauga, Ontario,
Canada
Tel: 905-673-0699
Fax: 905-673-6509

ASIA/PACIFIC

Asia Pacific Office
Suites 3707-14, 37th Floor
Tower 6, The Gateway
Harbour City, Kowloon
Hong Kong
Tel: 852-2401-1200
Fax: 852-2401-3431

Australia - Sydney
Tel: 61-2-9868-6733
Fax: 61-2-9868-6755

China - Beijing
Tel: 86-10-8528-2100
Fax: 86-10-8528-2104

China - Chengdu
Tel: 86-28-8665-5511
Fax: 86-28-8665-7889

China - Chongqing
Tel: 86-23-8980-9588
Fax: 86-23-8980-9500

China - Hong Kong SAR
Tel: 852-2401-1200
Fax: 852-2401-3431

China - Nanjing
Tel: 86-25-8473-2460
Fax: 86-25-8473-2470

China - Qingdao
Tel: 86-532-8502-7355
Fax: 86-532-8502-7205

China - Shanghai
Tel: 86-21-5407-5533
Fax: 86-21-5407-5066

China - Shenyang
Tel: 86-24-2334-2829
Fax: 86-24-2334-2393

China - Shenzhen
Tel: 86-755-8203-2660
Fax: 86-755-8203-1760

China - Wuhan
Tel: 86-27-5980-5300
Fax: 86-27-5980-5118

China - Xian
Tel: 86-29-8833-7252
Fax: 86-29-8833-7256

China - Xiamen
Tel: 86-592-2388138
Fax: 86-592-2388130

China - Zhuhai
Tel: 86-756-3210040
Fax: 86-756-3210049

ASIA/PACIFIC

India - Bangalore
Tel: 91-80-3090-4444
Fax: 91-80-3090-4123

India - New Delhi
Tel: 91-11-4160-8631
Fax: 91-11-4160-8632

India - Pune
Tel: 91-20-2566-1512
Fax: 91-20-2566-1513

Japan - Yokohama
Tel: 81-45-471- 6166
Fax: 81-45-471-6122

Korea - Daegu
Tel: 82-53-744-4301
Fax: 82-53-744-4302

Korea - Seoul
Tel: 82-2-554-7200
Fax: 82-2-558-5932 or
82-2-558-5934

Malaysia - Kuala Lumpur
Tel: 60-3-6201-9857
Fax: 60-3-6201-9859

Malaysia - Penang
Tel: 60-4-227-8870
Fax: 60-4-227-4068

Philippines - Manila
Tel: 63-2-634-9065
Fax: 63-2-634-9069

Singapore
Tel: 65-6334-8870
Fax: 65-6334-8850

Taiwan - Hsin Chu
Tel: 886-3-6578-300
Fax: 886-3-6578-370

Taiwan - Kaohsiung
Tel: 886-7-536-4818
Fax: 886-7-536-4803

Taiwan - Taipei
Tel: 886-2-2500-6610
Fax: 886-2-2508-0102

Thailand - Bangkok
Tel: 66-2-694-1351
Fax: 66-2-694-1350

EUROPE

Austria - Wels
Tel: 43-7242-2244-39
Fax: 43-7242-2244-393

Denmark - Copenhagen
Tel: 45-4450-2828
Fax: 45-4485-2829

France - Paris
Tel: 33-1-69-53-63-20
Fax: 33-1-69-30-90-79

Germany - Munich
Tel: 49-89-627-144-0
Fax: 49-89-627-144-44

Italy - Milan
Tel: 39-0331-742611
Fax: 39-0331-466781

Netherlands - Drunen
Tel: 31-416-690399
Fax: 31-416-690340

Spain - Madrid
Tel: 34-91-708-08-90
Fax: 34-91-708-08-91

UK - Wokingham
Tel: 44-118-921-5869
Fax: 44-118-921-5820

01/05/10

© 2010 Microchip Technology Inc.