LPCI-3488A/PXI-3488

High-Performance IEEE-488 GPIB Interface Cards

LPCI-3488A

PXI-3488

Features

- **Fully compatible with the IEEE-488 standard**
- **Supports a 32-bit 3.3 V or 5 V PCI bus**
- **PXI specification Rev. 2.2 compliant (PXI-3488)**
- **Up to 1.5 MB/s data transfer rates**
- **Built-in FIFO for read/write operations**
- **Provides APIs compatible with NI-488.2 driver software***
- **Supports industrial-standard VISA library**
- **Interactive utility for testing and diagnostics**

Operating Systems

- Windows Vista/XP/2000/2003 Server

Recommended Software

- VB/VC++/BCB/Delphi
- LabVIEW*
- LabWindow/CVI*

Introduction

The IEEE-488 standard, also known as GPIB, is a bus interface that connects instruments with a computer to form an ATE system. GPIB was initially developed by Hewlett Packard and was recognized as an IEEE standard in 1978. The IEEE-488.1-1978 standard defines the convention for electrical and mechanical bus characteristics, as well as the state diagram for each bus function. In 1987, another standard was derived from the original IEEE-488.1-1978 and known as IEEE-488.2-1978. It was introduced to define data formats, common commands, and control protocols for instruments. In general, IEEE-488.1 defines hardware specifications, and IEEE-488.2 defines software specifications. The IEEE-488 standard has been widely accepted by instrument vendors over the past few decades. Today, GPIB is still the most popular interface between computer and instruments.

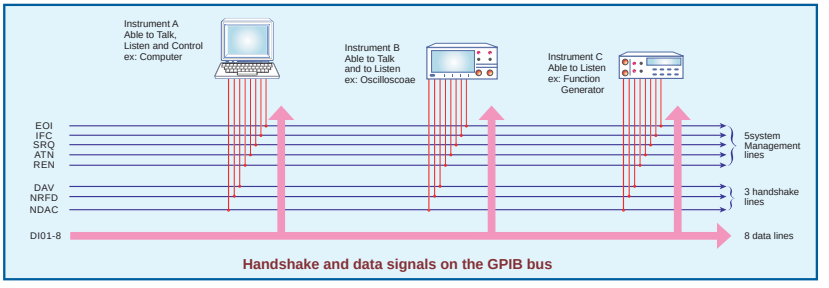

Handshake and data signals on the GPIB bus

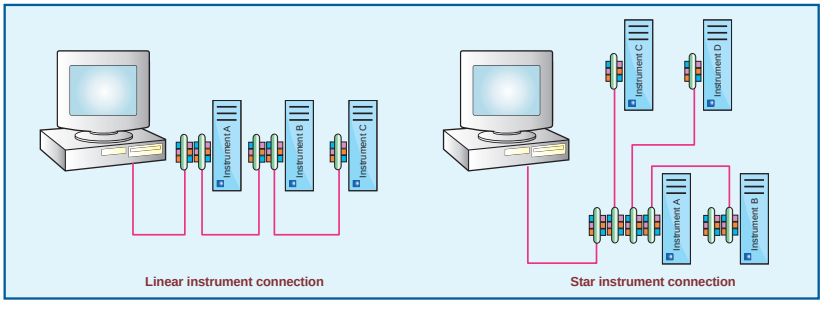

Linear instrument connection

Star instrument connection

ADLINK's LPCI-3488A and PXI-3488 GPIB controller interface cards are fully compatible with the IEEE-488.2 instrumentation control and communication standard and are capable of controlling up to 14 stand-alone instruments via IEEE-488 cables. The LPCI-3488A and PXI-3488 are designed to meet the requirements for high performance and maximum programming portability. The LPCI-3488A is developed using ADLINK's intellectual property in FPGAs which incorporates a GPIB controller, provides reliable GPIB bus control capability, and supports a transfer rate up to 1.5 MB/s. With APIs that are compatible with NI-488.2* driver software and VISA support, the LPCI-3488A and PXI-3488 offer the best compatibility with your existing applications and instrument drivers

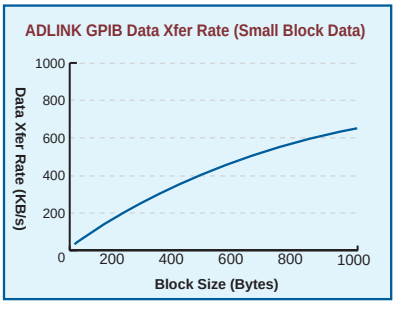

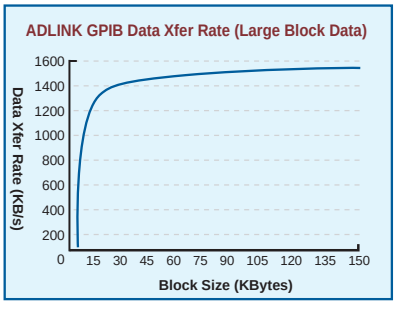

Performance

ADLINK's expertise in PCI and PXI interface cards was leveraged when developing these newly designed GPIB interface card. The LPCI-3488A, which is the low-profile PCI form factor, supports both 3.3 V and 5V PCI buses and can be adapted to most industrial and desktop computers. The PXI-3488 is compliant with PXI specification Rev. 2.2 and can be used with most PXI and CompactPCI system. A built-in FIFO is placed between the GPIB bus and PCI controller to buffer GPIB read/write operations. This FIFO eliminates the gap between the slow GPIB bus (~1.5 MB/s) and the fast PCI bus (132 MB/s), and dramatically increases overall system performance.

Fully Compatible with Your Existing Applications

ADLINK GPIB interface cards are delivered with complete software support, including a driver API that is fully binary compatible with NI-488.2* driver software. All programs written based on GPIB-32.DLL can be executed with LPCI-3488A or PXI-3488 without any modification. VISA library is also supported to ensure compatibility with applications utilizing VISA. The ADLINK LPCI-3488A and PXI-3488 thus provides the "Plug and Play" compatibility with all your existing applications.

How do ADLINK's GPIB Interface Cards Work?

The objective of a test and measurement application is to test a specific UUT (Unit Under Test) automatically. A typical automatic testing system includes testing programs and various testing equipment connected to the host computer via a GPIB interface. To manage the connections with GPIB instruments, testing programs are usually developed according to the following model: ADEs (Application Development Environments), the environment where applications are written. Some ADEs are popular because users can implement any function needed using textual programming (ex. VC++/VB, TestExec) or graphical programming (ex. LabVIEW*) techniques. A vital part of a test and measurement application is to control and communicate with GPIB instruments. Two techniques are generally used to control the GPIB interface: invoke the native driver API or use the existing instrument drivers via VISA. A native driver API is provided by most GPIB interface vendors and is usually in the form of ANSI C functions. For users who need more detailed control over GPIB instruments, using a driver API with SCPI string commands is a good choice. For others who want to keep away from complicated instrument commands, instrument drivers developed for specific ADEs (ex. LabVIEW*/TestExec) can significantly simplify the complexity of instrument control.

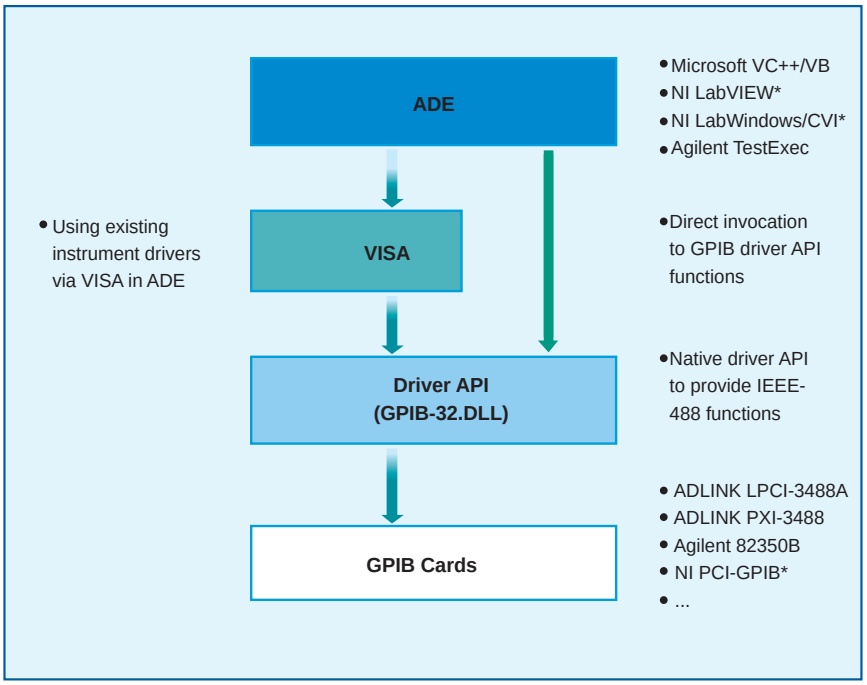

Most of the instrument drivers use a VISA library to control the GPIB interface and communicate with instruments. VISA support is essential in this case. ADLINK GPIB interface cards work with your applications in both ways. Its GPIB-32.DLL provides binary compatibility with the popular NI-488.2* driver software. The LPCI-3488A and PXI-3488 also provide VISA library support that can be used with most common instrument drivers written by instrument vendors. Regardless if you are using VC++, VB, Delphi, LabVIEW*, or any other T&M ADE, ADLINK GPIB interface cards are the most cost-effective GPIB solutions compatible with all your applications.

Specifications

■ GPIB Bus Specifications	• Up to 14 instruments connected
	• Maximum 1.5 MB/s data transfer rate
	• Cable length -2 meters between each instrument (suggested) -20 meters total cable length
	• Data transfer mode: 8 bits parallel
	• Handshake: 3 wire handshake, reception of each data byte is acknowledged
■ Certifications	• EMC/EMI: CE, FCC Class A
■ Programming Interface	• VB/VC++/BCB/Delphi
	• LabVIEW™*
	• LabWindows/CVI*
■ General Specifications	• I/O connector : IEEE-488 standard 24-pin
	• Operating temperature : 0°C to 55°C
	• Storage temperature : -20°C to 80°C
	• Relative humidity : 5% to 95%, non-condensing
	• Power requirements

• LPCI-3488A	• PXI-3488	
+5 V	+5 V	+3.3 V
250 mA (typical) 300 mA (maximum)	400 mA (typical) 750 mA (maximum)	400 mA (typical) 750 mA (maximum)

■ Dimensions (not including connectors) :	• LPCI-3488A: 120 mm x 64 mm
	• PXI-3488: 160 mm x 100 mm

Ordering Information

■ **LPCI-3488A**
High-Performance IEEE-488 GPIB interface card for low-profile PCI bus, shipped with an additional low-profile bracket.

■ **PXI-3488**
High-Performance IEEE-488 GPIB interface card for PXI/CompactPCI bus

■ **ACL-IEEE488-1**
IEEE-488 standard cable, 1 meter length

■ **ACL-IEEE488-2**
IEEE-488 standard cable, 2 meter length

■ **ACL-IEEE488-4**
IEEE-488 standard cable, 4 meter length

■ **ACL-IEEE488-8**
IEEE-488 standard cable, 8 meter length

Product names mentioned herein are used for identification purposes only and may be trademarks and/or registered trademarks of their respective companies.

***NI, LabVIEW, LabWindows, and CVI are trademarks or registered trademarks of National Instruments Corporation or its subsidiaries in the United States and other countries.**

PCI™/PCI Express®/ExpressCard™ Expanded Anywhere

With ADLINK Bus Expansion Technology

What is Bus Expansion Technology?

Bus expansion, or bus extension, is a technology that increases the number of bus slots of the same or different bus types for a host computer system. Typically, a bus expansion system is composed of three major parts, an expansion card installed in the host computer, an expansion chassis to provide more bus slots, and a specialized cable to connect them. Though the host computer and the expansion chassis are physically separated, they are logically the same computer system. All cards installed in the expansion chassis are recognized and operated as if they were installed in the host computer, without any additional drivers or software needed.

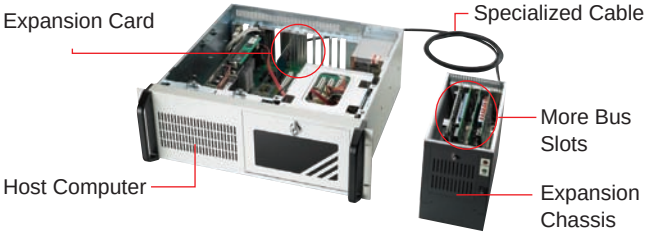

Benefits of Bus Expansion Technology

- Increase bus slots, let customers install more PCI™ devices into a single PC system.
- Provide interoperability of different bus interface device, PCI™ and PXI™ in a PC system.
- Leverage latest and superb computing power of server-grade computer, without changing your PCI™ modules.
- By separating host PC and extension chassis, all of the measurement modules are kept away from high frequency interference from CPU, chipset, and memory, etc.
- Extension via cable up to 10 m, the host can be protected in a safe environment while the control or measurement module can be placed in hazardous environment.
- Complete hardware and software transparency, without the need for addition drivers or software.

Types of Bus Expansion Solutions

Depending on the bus type in a host computer and extension chassis, we can create many combinations of bus expansion solutions. The following are several existing bus extension solutions ADLINK provides:

- PCI-to-PCI expansion
- PCI-to-PXI expansion
- PCI Express-to-PCI expansion
- PCI Express-to-PXI expansion
- ExpressCard-to-PCI expansion
- ExpressCard-to-PXI expansion

PCIS-8580-13S

EC-8560/PXI-8565

PCI-8570 / PXI-8570

ADLINK Bus Expansion Technology

ADLINK is dedicated to the fields of PCI™, PXI™ and PCI Express® extension technology. The PCI™ bus is a parallel bus which contains 32 data lines (32-bit PCI™) or 64 data lines (64-bit PCI™), while PCI Express® bus is a high-speed serialized bus which uses 2.5 Gbps LVDS signal pairs to transmit/receive data. Distinct extension technologies are used for different bus types. In this section, we'll illustrate the technologies we use for ADLINK bus expansion solutions.

PCI-based Expansion Technology (PCI-to-PCI, PCI-to-PXI, PXI-to-PXI)

ADLINK leverages a state-of-art StarFabric™ technology to design our PCI-based expansion solution. The ADLINK PCI-based expansion solution works as a transparent PCI™ bridge and converts PCI™ bus signals to serialized StarFabric™ data format and transmits the data using LVDS signal pairs. This new expansion solution provides up to 10 meters of expansion distance and extremely reliable operation.

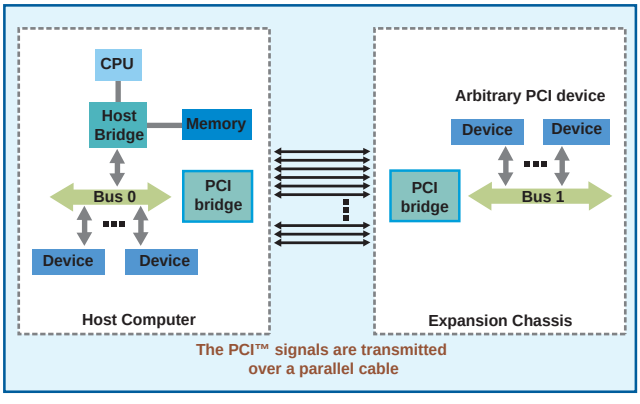

PCI Express-based Expansion Technology (PCIe-to-PCI, PCIe-to-PXI, ExpressCard-to-PCI, ExpressCard-to-PXI)

PCI Express® bus is inherently a serialized bus. Data between devices is transferred in the form of serialized data packets and over 2.5 Gbps LVDS PHY. A major concern is maintaining signal integrity while transmitting signals over cables. ADLINK PCI Express-based solutions provide up to 7 meters of extension and over 100 MB/s sustained data transfer rate.

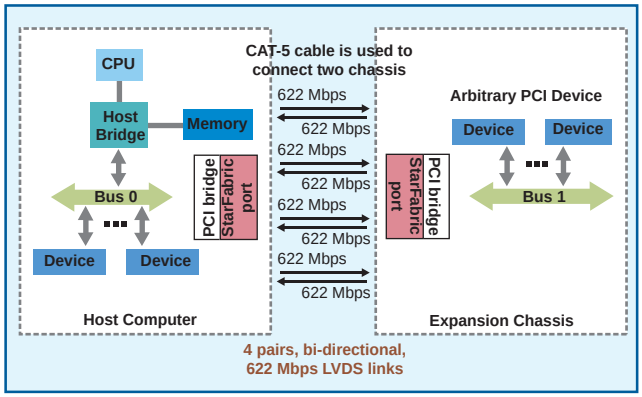

Selecting ADLINK Bus Expansion Solutions

Various bus extension solutions are provided based on the bus types of the host computer and the expansion chassis. Here are few simple steps to help you correctly choose the bus expansion solution you need.

1. Select the bus in your host computer system

For desktop or Industrial computers, there are PCI™ or PCI Express® slots available. For laptop computers, you may have an ExpressCard™ slot. For PXI™ systems, PXI™ slots are available. You should first select the bus you want to expand from.

2. Select the bus and chassis to expand to

If the target of extension is PXI™ bus, you should select a corresponding PXI™ module to connect to a host computer. If the target of the expansion is PCI™ bus, the expansion system usually comes with a chassis that contains a backplane and power supply. You should select the capacity of PCI™ slots within the expansion chassis.

3. Select the extension cable according to your expected extension distance

For example, ADLINK PCI-based expansion solutions provide cable options of 2, 5, and 10 meters and ADLINK PCI Express-based expansion solutions provide cable options of 1, 3, and 7 meters.

Step 1 Select a bus for your host computer

Step 2 Select the bus and chassis to expand to

	More PCI Slots	PXI Chassis
PCI EXPRESS®	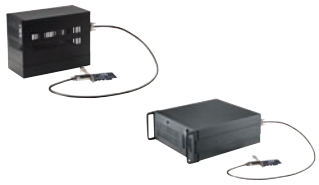 PCES-8581-4S/PCES-8581-13S [P.3-5]	PCIe-8560/PXI-8565 [P.3-10]
ExpressCard™	ECS-8582-4S [P.3-5]	EC-8560/PXI-8565 [P.3-9]
PCI	PCIS-8580-4S/PCIS-8580-13S [P.3-7]	PCI-8570/PXI-8570 [P.3-8]
PXI™	Call for availability	PXI-8570 [P.3-8]

PCES-8581-4S/13S, ECS-8582-4S

PCIe/EC-to-PCI Expansion Systems

Features

- **PCI Express-based control of PCI - PCES-8581-4S/13S**
- **ExpressCard-based control of PCI - ECS-8582-4S**
- **High-speed PCI Express x1 interface**
- **Compatible with 5 V and 3.3 V PCI signaling**
- **32-bit/33 MHz PCI interface support**
- **PCES-8581-4S/ECS-8582-4S expand four half-size PCI slots in a shoebox size wallmount chassis with built-in 200 W power supply**
- **PCES-8581-13S expands 13 full-size PCI slots in a 19" rack-mount chassis with built-in 400 W power supply**
- **Extension distance of up to 7 meters (extension cables at 1 M, 3 M, and 7 M)**
- **Comprehensive hardware and software transparency**
- **Compliant with**
  - ExpressCard™ Standard Release 1.2
  - PCI Express® Base Specification Rev. 1.0a
  - PCI-to-PCI Bridge Architecture Specification, Revision 1.2
  - PCI Local Bus Specification, Revision 3.0

Introduction

Harnessing the bandwidth potential of the PCI Express, these latest smart expansion systems enable compuers with a PCI Express slot to remotely manage and control up to 13 PCI devices seven meters away, using the high-speed PCI Express interface. Offering up to 13 (PCES-8581-13S) or four PCI slots (PCES-8581-4S, ECS-8582-4S), these expansion systems operate in 32-bit/33 MHz configuration and come with complete end-to-end hardware and software transparency for the host system. Hardware devices installed in the expansion system behave and work as if these are directly installed into the host system, requiring no additional drivers or software installation. The host system may be separated from the expansion system at up to seven meters using high-quality shielded twisted copper cables. The robust and reliable PCI expansion-to-PCI expansion systems are suited for portable test and measurement applications with high-density I/O requirement and in hazardous industrial control and automation environments.

Controlling PCI™ Remotely via the PCI® Express Interface

Most commercial desktop PCs of today are equipped with only one or two PCI slots. For users and applications requiring control of multiple PCI devices from one PC system, this limitation causes great difficulty when searching for and deciding on a suitable computer system. With the ADLINK PCES-8581-13S expansion system, users can easily expand their system and conveniently accommodate 13 PCI devices or more.

For rugged applications where the PC system is subjected to a hazardous environment, valuable components such as the CPU and hard disk drive are easily damaged. To protect these valuable IT investments, the PCES-8581-13S and the PCES-8581-4S PCI Express-to-PCI expansion system can be controlled remotely at up to 7 meters from the host PC using a high-speed and well-shielded cable. While the host PC system is installed at a safe distance from the rugged environment, the remote expansion system is designed to withstand extreme temperatures or high vibration. On the other hand, if your PCI devices require less electromagnetic interference, you may also use the PCI Express-to-PCI expansion system to isolate high frequency interferences from the CPU, memory, or North/Southbridge chips. These expansion systems also allow close installation of your DAQ and/or control cards with the DUT (Device Under Test) for a more compact and space-saving test and measurement environment.

The ExpressCard-to-PCI expansion technology

The ECS-8582-4S expansion system consists of an EC-8560 installed in the laptop computer, a RK-8005 expansion chassis with pre-installed backplane and PCI-8565 expansion card to accommodate PCI™ cards, and a cable to connect them. The EC-8560 is an ExpressCard/34 module that re-drives the PCI Express® signal and transmits it through the cable. On the other side, the PCI-8565 installed in the expansion chassis equalizes the signal and works as a PCI Express-to-PCI bridge to accommodate four 32-bit/33 MHz PCI™ slots. Operating with full 132 MB/s PCI™ bandwidth, the ECS-8582-4S delivers an easy solution for bus expansion without any sacrifice of performance.

Note:
Due to the BIOS design, some laptop computers may be limited by system resource allocation for external PCI™ devices. ADLINK tests various laptop computers for compatibility with the ECS-8582-4S. Please visit the ADLINK website or contact us for compatibility information.

Expand PCI connectivity from a laptop computer

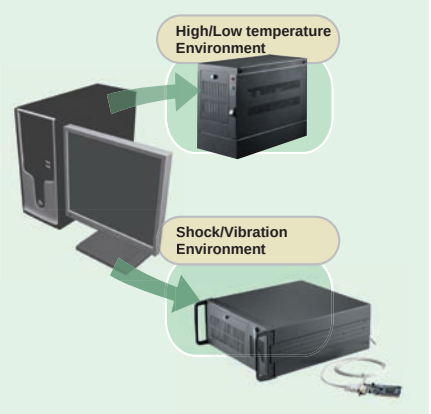

Separate your PC system and PCI devices, protect your PC system from hazardous environments.

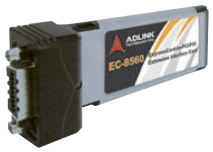
EC-8560

RK-8005

PCIe-8560

RK-8014

Specifications

■ EC-8560	• ExpressCard™ Standard Release 1.2 compliant • PCI Express® Base Specification Rev. 1.0a compliant • PCI Express® x1 link with 250 MB/s data throughput • Extended distance of up to 7 meters • Dimension: ExpressCard/34 (108 mm (W) x 34 mm (H)) • Power requirements:

Device	+3.3 V
EC-8560	210 mA

■ PCIe-8560	• PCI Express Base Specifications Rev. 1.0a compliant • PCI Express x1 link with 250 MB/s data throughput • Extended distance of up to 7 meters • Dimension: Low-profile PCI Express card (69 mm (H) x 87 mm(W)) • Power requirements:

Device	+3.3 V
EC-8560	210 mA

■ PCI-8565	• PCI-to-PCI Bridge Architecture Specifications Rev. 1.2 compliant • PCI™ Local Bus Specifications Rev. 3.0 compliant • Supports 5 V and 3.3 V PCI™ bus • Extended distance of up to 7 meters • Dimensions: Low-profile PCI™ add-on card (64 mm (H) x 120 mm (W)) • Power requirements:

Device	+3.3 V
PCI-8565	720 mA

■ RK-8005	• Dimensions:122 mm (W) x 195 mm (H) x 259 mm (D) • Weight: 3.2 kg (7.04 lb) • Backplane: Five 32-bit/33 MHz half-sized PCI™ slots - One slot for expansion card - 4 slots available for PCI™ cards • Power supply: - Input voltage: 85 VAC to 265 VAC - Output: 200 W • Cooling: One 37.5 CFM ball bearing fan (80 mm)
■ RK-8014	• Dimensions: 483.5 mm (W) x 177 mm (H) x 448.5 mm (D) • Weight: 12 Kg (26.4 lb) • Backplane: 14 x 32-bit/33 MHz full-size PCI slots - 1 slot for expansion card - 13 slots available for PCI cards • Power supply: - Input voltage: 85VAC to 265VAC with auto-switching - Output: 400 W • Cooling: Two 88 CFM ball bearing fan (120 mm)
■ ACL-EXPRESS-1/-3/-7	• Length: 1 M, 3 M, 7 M

General Specifications

- Operating temperature: 0°C to 50°C
- Storage temperature: -20°C to 80°C
- Relative humidity: 10% to 90%, non-condensing

Ordering Information

■ **ECS-8582-4S**
Includes One EC-8560, One RK-8005, and One ACL-EXPRESS-3 Cable

■ **PCES-8581-4S**
Includes One PCIe-8560, One RK-8005, and One ACL-EXPRESS-3 Cable

■ **PCES-8581-13S**
Includes One PCIe-8560, One RK-8014, and One ACL-EXPRESS-3 Cable

■ **ACL-EXPRESS-1**
Optional 1 M Expansion Cable

■ **ACL-EXPRESS-3**
Optional 3 M Expansion Cable

■ **ACL-EXPRESS-7**
Optional 7 M Expansion Cable

PCI-8565

ACL-EXPRESS-1/-3/-7

PCIe/EC-to-PCI Expansion Systems

System Model	Host Bus Type	Expansion Bus Type	Slots No.	Expansion System Includes				Cable Option
				Card (Host)	Card (Extend)	Expansion Chassis	Accessory	
ECS-8582-4S	ExpressCard	PCI	4	EC-8560	PCI-8565	RK-8005	ACL-EXPRESS-3	ACL-EXPRESS-1/-7
PCES-8581-4S	PCI Express	PCI	4	PCIe-8560	PCI-8565	RK-8005	ACL-EXPRESS-3	ACL-EXPRESS-1/-7
PCES-8581-13S	PCI Express	PCI	13	PCIe-8560	PCI-8565	RK-8014	ACL-EXPRESS-3	ACL-EXPRESS-1/-7

PCIS-8580-4S/PCIS-8580-13S

PCI-to-PCI Expansion Systems

PCIS-8580-4S

PCIS-8580-13S

Introduction

The ADLINK PCIS-8580 is a PCI-to-PCI expansion system to expand the PCI buses of host computers. With its state-of-the-art StarFabric high-speed serial link technology, you can expand your PCI bus of a host computer to an external chassis, which accommodates four (PCIS-8580-4S) or 13 (PCIS-8580-13S) additional PCI slots. This advanced technology provides full 32-bit/33 MHz PCI bandwidth (132 MB/s) and a maximum of 10 M distance between host computer and expansion chassis. The ADLINK PCI-to-PCI expansion system utilizes the concept of "serialized bridge" to provide complete hardware and software transparency to your host system. Any hardware installed in the extension chassis works as if it is directly installed inside the host system without the need for additional drivers or software.

The ADLINK PCIS-8580 PCI-to-PCI expansion system is composed of three major components: a PCI expansion card (LPCI-8575), an expansion chassis (RK-8005/RK-8014), and a cable (ACL-PCIEXT-2). The PCI expansion card is the core of this system. It acts as a PCI bridge with the capability to serialize PCI signals and maintain a 5 Gbps serial link between the host system and expansion chassis. The expansion chassis, which is a 4-slot wall-mount chassis (RK-8005) or a 13-slot rack-mount chassis (RK-8014), is the platform to accommodate PCI slots. It contains a backplane, a power supply, and a pre-installed PCI extension card. The cable, which consists of DVI-D connector and shielding twisted pairs, provides robust connectivity and maintains proper signal quality between the host computer and the expansion chassis.

LPCI-8575

RK-8005

RK-8014

ACL-PCIEXT-2/-5/-10

Features

- Compliant with PCI local bus specification Rev 2.2
- Compliant with PCI bridge architecture specification Rev 1.2
- PCIS-8580-4S expands four PCI slots in a shoebox size wall-mount chassis with built-in 200 W power supply
- PCIS-8580-13S expands 13 full-size PCI slots in a 19" rack-mount chassis with built-in 400 W power supply
- Full 32-bit/33 MHz PCI bandwidth extension (132 MB/s)
- Extension distance of up to 10 meters (expansion cables at 2 M, 5 M, and 10 M)
- Complete hardware and software transparency
- 24-pin DVI-D connector for robust connectivity

General

- Operating temperature: 0°C to 50°C
- Storage temperature: -20°C to 80°C
- Relative humidity: 10% to 90%, non-condensing

Ordering Information

- **PCIS-8580-4S**
  Includes One LPCI-8575, One RK-8005, and One ACL-PCIEXT-2 Cable
- **PCIS-8580-13S**
  Includes One LPCI-8575, One RK-8005, and One ACL-PCIEXT-2 Cable
- **ACL-PCIEXT-2**
  Optional 2 M Expansion Cable
- **ACL-PCIEXT-5**
  Optional 5 M Expansion Cable
- **ACL-PCIEXT-10**
  Optional 10 M Expansion Cable

Specifications

LPCI-8575	• PCI local bus specification Rev 2.2 compliant
	• PCI bridge architecture specification Rev 1.2 compliant
	• Supports both 5 V and 3.3 V PCI buses
	• Data throughput: full 32-bit/33 MHz PCI bandwidth (132 MB/s)
	• I/O connector: DVI-D 24-pin connector
	• Maximal extended distance: 10 M
	• Power requirements: +5 V: 190 mA; +3.3 V: 250 mA
RK-8005	• Dimensions: 122 mm (W) x 195 mm (H) x 259 mm (D)
	• Weight: 3.2 kg
	• Backplane: Five 32-bit/33 MHz half-sized PCI slots - 1 slot for expansion card - 4 slots available for PCI cards
	• Power supply - Input voltage: 85 VAC to 265 VAC - Output: 200 W
	• Cooling: One 37.5 CFM ball bearing fan (80 mm)
RK-8014	• Dimension: 483.5 mm (W) x 177 mm (H) x 448.5 mm (D)
	• Weight: 12 kg
	• Backplane: 14x 32-bit/33 MHz full-sized PCI slots - 1 slot for expansion card - 13 slots available for PCI cards
	• Power supply - Input voltage: 85 VAC to 265 VAC, auto-switching - Output: 400 W
	• Cooling: Two 88 CFM ball bearing fan (120 mm)
ACL-PCIEXT-2/-5/-10	• Length: 2M, 5M, 10M

PCI-to-PCI Expansion Systems

System Model	Host Bus Type	Expansion Bus Type	Slots No.	Expansion System Includes				Cable Option
				Card (Host)	Card (Extend)	Expansion Chassis	Accessory	
PCIS-8580-4S	PCI	PCI	4	LPCI-8575	LPCI-8575	RK-8005	ACL-PCIEXT-2	ACL-PCIEXT-5/-10
PCIS-8580-13S	PCI	PCI	13	LPCI-8575	LPCI-8575	RK-8014	ACL-PCIEXT-2	ACL-PCIEXT-5/-10

PCI-8570/PXI-8570

PCI-to-PXI/PXI-to-PXI Expansion Kit

Introduction

The ADLINK PCI/PXI-8570 expansion kit is a PCI-to-PXI or PXI-to-PXI expansion module that functions as a transparent PCI-to-PCI bridge register set. Implementing master and slave extension modules, users can have direct control of PXI/CompactPCI chassis from any other PC or another PXI/CompactPCI system. All devices on the system are deemed to be local devices on the same PCI bus.

The PCI interface supports 64-bit or 32-bit PCI buses operating at 66 MHz or 33 MHz. By adopting shielded twisted copper cables, PCI-8570/PXI-8570 can expand the transmission distance to 10 meters. One master expansion card (either PCI-8570 or PXI-8570) can expand up to 2 slave expansion modules (PXI-8570) at the same time. A bundled link can support the full bandwidth of a 64-bit/66 MHz PCI bus. All interrupts asserted by add-in cards in the expansion system are passed through the expansion set to the host system.

With ADLINK PCI/PXI-8570, users can combine PCI, CompactPCI, and PXI devices in the same system, increase the available number of PXI/CompactPCI slots for high-density I/O application and separate a control system from a harsh environment with an expansion chassis.

Features

- Direct PC control of PXI/CompactPCI systems
- Multi-chassis configurations for PXI/CompactPCI
- Up to 2 PCI segments extended from single PCI/PXI-8570
- Up to 64-bit, 66 MHz PCI bus expansion
- StarFabric link performance
- 528 MB/s peak (64-bit, 66 MHz PCI)
- 132 MB/s peak (32-bit, 33 MHz PCI)
- expansion distance of up to 10 meters (extension cables at 2 M, 5 M, and 10 M)
- Completely hardware and software transparent
- Independence of operating systems
- Seamless PCI interrupt extension
- Compliant with
  - PCI local Bus Specifications Rev. 2.2
  - PCI-to-PCI Bridge Architecture Specifications Rev. 1.1
  - PXI Specifications Rev. 2.2

General Specifications

- Operating temperature: 0°C to 50°C
- Storage temperature: -20°C to 80°C
- Relative humidity: 10% to 90%, non-condensing

Certification

- EMC/EMI: CE, FCC Class A

Ordering Information

- **PCI-PXI Expansion Kit**
  Includes One PCI-8570, One PXI-8570, and One ACL-PXIES-2 Cable
- **PXI-PXI Expansion Kit**
  Includes Two PXI-8570 and One ACLPXIES- 2 Cable
- **PCI-8570**
  PCI-to-PXI Expansion Interface Card for Host PC
- **PXI-8570**
  PCI-to-PXI/PXI-to-PXI Expansion Interface Module for PXI Chassis
- **ACL-PXIES-2**
  Copper Cable Kit, 2 M
- **ACL-PXIES-5**
  Copper Cable Kit, 5 M
- **ACL-PXIES-10**
  Copper Cable Kit, 10 M

PCI-8570

PXI-8570

ACL-PXIES-2/-5/-10

Specifications

PCI-8570	• PCI™ local bus specifications Rev. 2.2 compliant • Maximum data throughput - 132 MB/s (32-bit, 33 MHz PCI) - 528 MB/s (64-bit, 66 MHz PCI) • I/O Connector: RJ-45 connector x 4 • Extended distance of up to 10 meters • Dimensions (not including connectors): 160 mm (H) x 100 mm (W) • Power requirement:

Device	+5 V	+3.3 V
PCI-8570	190 mA	250 mA

PXI-8570	• PXI™ Specifications Rev. 2.2 compliant • PCI-to-PCI Bridge Architecture Specifications Rev. 1.1 compliant • PCI™ Local Bus Specifications Rev. 2.2 compliant • Supports both 32-bit/66 MHz and 64-bit/66 MHz PCI™ interface • I/O Connector: RJ-45 connector x 4 • Extended distance of up to 10 meters • Internal arbiter supports up to 7 external masters • Up to seven PCI clock/bus requests • Dimensions: 3U PXI form factor 175 mm (W) x 107 mm (H) • Power requirement

Device	+3.3 V
PXI-8570	540 mA

ACL-PXIES-2/-5/-10	• Length: 2 M, 5 M, 10 M

EC-8560/PXI-8565

ExpressCard-to-PXI/CompactPCI Expansion Kit

EC-8560

PXI-8565

Introduction

The ExpressCard-to-PXI/CompactPCI expansion kit allows you to control PXI™/CompactPCI® modules installed in PXI™/Compact-PCI® chassis using the ExpressCard™ slot in your laptop computer. ExpressCard™ technology leverages the features of PCI Express® bus but in a small form factor for laptop computer usage. With comprehensive hardware and software transparency, the expansion kit enables fast and convenient detection of any installed PXI™/CompactPCI® cards in a PXI™ chassis, without requiring additional drivers or software installation. The EC-8560 and PXI-8565 are connected by a shielded twisted copper cable of up to 7 meters in length for remote operating convenience. Supporting the ExpressCard™ interface, the ExpressCard-to-PXI/CompactPCI expansion kit provides laptop users great portability and convenience for remote control and measurement applications.

Controlling PXI™/CompactPCI® with ExpressCard™

The EC-8560 implements the novelty of a PXI™ remote controller to allow users control of PXI™/CompactPCI® modules via a laptop computer. The technology consists of an EC-8560 installed in the laptop computer, a PXI-8565 installed in an expanded PXI™ chassis, and a shielded cable to connect them. The EC-8560 comes in an ExpressCard/34 footprint and transmits PCI Express® signals to a shielded twisted cable. The PXI-8565 then converts the signals and works as a PCI™ bridge that supports 32-bit/66 MHz PXI™/CompactPCI® modules.

Note

Due to BIOS design, some laptop computers may be limited by system resource allocation for external PCI™ devices. ADLINK tests various laptop computers for compatibility with our ExpressCard-to-PXI expansion kit. Please visit the ADLINK website or contact us for compatibility information.

Features

- **ExpressCard™-based control of PXI™/CompactPCI®**
- **High-speed PCI Express® x1 interface**
- **Direct control of PXI™/CompactPCI® systems via laptop computer**
- **Supports 32-bit/66 MHz PCI™ interface**
- **Expansion distance of up to 7 meters (expansion cables at 1 M, 3 M, and 7 M)**
- **Comprehensive hardware and software transparency**
- **Compliant with**
  - **ExpressCard™ Standard Release 1.2**
  - **PCI Express® Base Specifications Rev. 1.0a**
  - **PXI™ Specifications Rev. 2.2**
  - **PCI-to-PCI Bridge Architecture Specifications Rev. 1.2**
  - **PCI™ Local Bus Specifications Rev. 3.0**

General Specifications

- Operating temperature: 0°C to 50°C
- Storage temperature: -20°C to 80°C
- Relative humidity: 10% to 90%, non-condensing

Certification

- EMC/EMI: CE, FCC Class A

Ordering Information

- **ExpressCard-to-PXI Expansion Kit**
  Includes One EC-8560, One PXI-8565, and One ACL-EXPRESS-3 Cable
- **EC-8560**
  ExpressCard-to-PXI Expansion Interface Card for Host Laptop Computer
- **PXI-8565**
  ExpressCard-to-PXI Expansion Interface Card for PXI Chassis
- **ACL-EXPRESS-1/-3/-7**
  High-speed Expansion Cable, 1/3/7 M

EC-8560

PXI-8565

ACL-EXPRESS-1/-3/-7

Specifications

EC-8560	• ExpressCard™ Standard Release 1.2 compliant • PCI Express® Base Specification Rev. 1.0a compliant • PCI Express® x1 link with 250 MB/s data throughput • Extended distance of up to 7 meters • Dimension: ExpressCard/34 108 mm (W) x 34 mm (H) • Power requirements:

Device	+3.3 V
EC-8560	210 mA

PXI-8565	• PXI™ Specifications Rev. 2.2 compliant • PCI-to-PCI Bridge Architecture Specifications Rev. 1.2 compliant • PCI™ Local Bus Specifications Rev. 3.0 compliant • Supports 32-bit/66 MHz PCI™ interface • Internal arbiter supports up to 7 external masters • Up to seven PCI clock/bus requests • Extended distance of up to 7 meters • Dimensions: 3U PXI™ form factor 175 mm (W) x 107 mm (H) • Power requirement:

Device	+3.3 V
PXI-8565	720 mA

ACL-EXPRESS-1/-3/-7	• Length: 1 M, 3 M, 7 M

PCIe-8560/PXI-8565

PCI Express-to-PXI/CompactPCI Expansion Kit

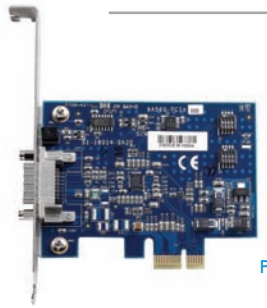

PCIe-8560

PXI-8565

Introduction

The PCI Express-to-PXI/CompactPCI expansion kit provides control of PXI/CompactPCI modules installed in a PXI/CompactPCI expansion system using the high-bandwidth PCI Express technology. With comprehensive hardware and software transparency, the expansion kit enables fast and convenient detection of any installed PXI/CompactPCI cards in the expansion system, without requiring additional drivers or software installation.

The PCIe-8560 and PXI-8565 are connected by a shielded twisted copper cable of up to seven meters for remote operating convenience. Suitable for remote industrial control or automation, the PCI Express-to-PXI/CompactPCI expansion kit is designed to withstand rugged environments and harsh operating conditions.

Controlling PXI™/Compact® PCI with PCI Express2®

The PCIe-8560 and PXI-8565 PCI Express-to-PXI/CompactPCI expansion kit provides additional PXI slots to the host computer by implementing a PCI Express-based control of PXI/CompactPCI modules. The technology consists of a PCIe-8560 card installed in the host computer, a shielded cable, and the expansion system with the 3U (Eurocard) PXI-8565 expansion module. The PCIe-8560 comes in a PCI Express x1 footprint and converts PCI Express signals to a PCI bridge that supports 32-bit/66 MHz PXI/CompactPCI modules.

PCIe-8560

PXI-8565

ACL-EXPRESS-1/-3/-7

Features

- **PCI Express-based control of PXI/CompactPCI**
- **High-speed PCI Express x1 interface**
- **Direct control of PXI/CompactPCI systems**
- **Supports 32-bit/66 MHz PCI™ interface**
- **Expansion distance of up to 7 meters (expansion cables at 1 M, 3 M, and 7 M)**
- **Comprehensive hardware and software transparency**
- **Compliant with**
  - **PCI Express® Base Specifications Rev. 1.0a**
  - **PXI™ Specifications Rev. 2.2**
  - **PCI-to-PCI Bridge Architecture Specifications Rev. 1.2**
  - **PCI™ Local Bus Specifications Rev. 3.0**

General Specifications

- Operating temperature: 0°C to 50°C
- Storage temperature: -20°C to 80°C
- Relative humidity: 10% to 90%, non-condensing

Certification

- EMC/EMI: CE, FCC Class A

Ordering Information

- **PCI Express-to-PXI Expansion Kit**
  Includes One PCIe-8560, One PXI-8565, and One ACL-EXPRESS-3 Cable
- **PCIe-8560**
  PCI Express-to-PXI Expansion Interface Card for host PC
- **PXI-8565**
  PCI Express-to-PXI Expansion Interface Card for PXI Chassis
- **ACL-EXPRESS-1**
  High-speed Expansion Cable, 1 M
- **ACL-EXPRESS-3**
  High-speed Expansion Cable, 3 M
- **ACL-EXPRESS-7**
  High-speed Expansion Cable, 7 M

Specifications

PCIe-8560	• PCI Express Base Specifications Rev. 1.0a compliant • PCI Express x1 link with 250 MB/s data throughput • Extended distance of up to 7 meters • Dimension: Low-profile PCI Express card 69 mm (H) x 87 mm (W) • Power requirement:

Device	+3.3 V
PCIe-8560	210 mA (max)

PXI-8565	• PXI™ Specifications Rev. 2.2 compliant • PCI-to-PCI Bridge Architecture Specifications Rev. 1.2 compliant • PCI™ Local Bus Specifications Rev. 3.0 compliant • Supports 32-bit/66 MHz PCI™ interface • Extended distance of up to 7 meters • Internal arbiter supports up to 7 external masters • Up to seven PCI clock/bus requests • Dimensions: 3U PXI form factor 175 mm (W) x 107 mm (H) • Power requirement:

Device	+3.3 V
PXI-8565	720 mA

ACL-EXPRESS-1/-3/-7	• Length: 1 M, 3 M, 7 M