1000Base-T Module

EPG4000S

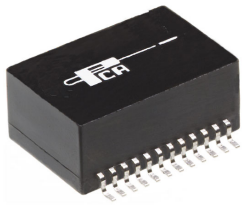

- Complies with or exceeds IEEE 802.3ab 1000Base-T
- Guaranteed to operate with 10/100Base-TX
- 1500 Vrms Isolation

Electrical Parameters @ 25° C

OCL (μH Min.)	Insertion Loss (dB Max.)			Return Loss (dB Min.)				CMRR (dB Min.)	Common to Differential (dB Min.)				Cross talk (dB Min.)		
@ 100 KHz, 0.1 Vrms 8 mA DC bias	1-65 MHz	65-100 MHz	100-125 MHz	1-40 MHz	60 MHz	80 MHz	100 MHz	1-80 MHz	1 MHz	30 MHz	50 MHz	100 MHz	1-40 MHz	60 MHz	100 MHz
350 (Media Side)	-1	-1.1	-1.5	-18	-15	-12	-10	-30	-60	-40	-35	-30	-40	-35	-30

• **Rise Time :** 1.75 nS Max. • **Impedance :** 100 Ω •

Schematic

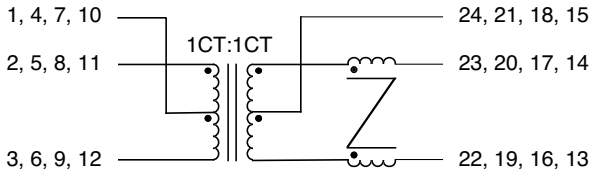

Package

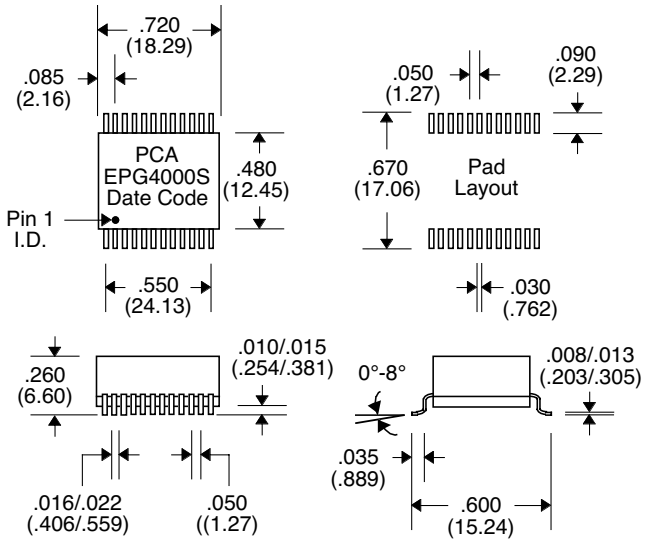

Unless Otherwise Specified Dimensions are in Inches /mm ± .010 /.25

PCA ELECTRONICS, INC.
16799 SCHOENBORN ST.
NORTH HILLS, CA 91343

Product performance is limited to specified parameters. Data is subject to change without prior notice.

CSFG4000S Rev. Orig1 5/8/03 JDG

TEL: (818) 892-0761
FAX: (818) 894-5791
http://www.pca.com