THIS DRAWING CONTAINS INFORMATION PROPRIETARY TO POSITRONIC AND IT'S SUBSIDIARIES. POSITRONIC BELIEVES THE DATA ON THIS DRAWING TO BE RELIABLE, SINCE THE TECHNICAL INFORMATION IS GIVEN FREE OF CHARGE, THE USER EMPLOYS SUCH INFORMATION AT HIS OWN DISCRETION AND RISK. POSITRONIC ASSUMES NO RESPONSIBILITY FOR RESULTS OBTAINED OR DAMAGES INCURRED FROM USE OF SUCH INFORMATION IN WHOLE OR IN PART.

SK10949

DATE	REV	REVISION RECORD	APP	DR	CK
8-12 09	NC	ECO 31419	RCW	BS	TK

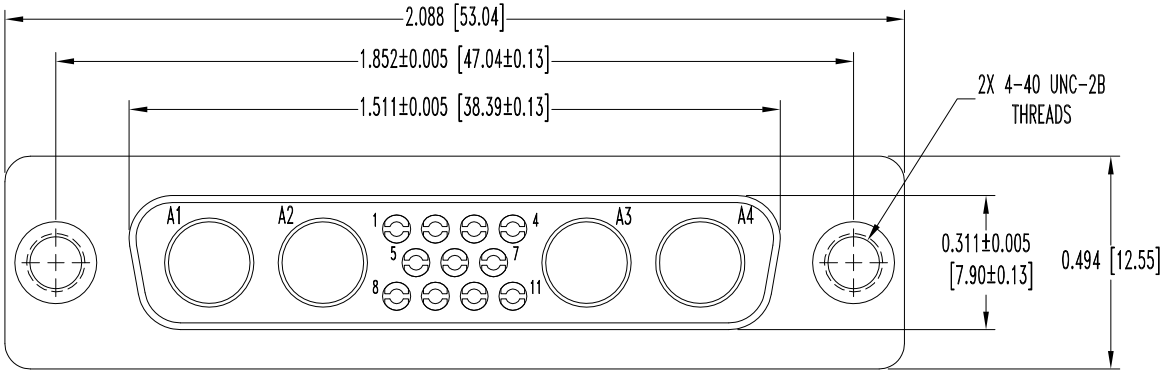

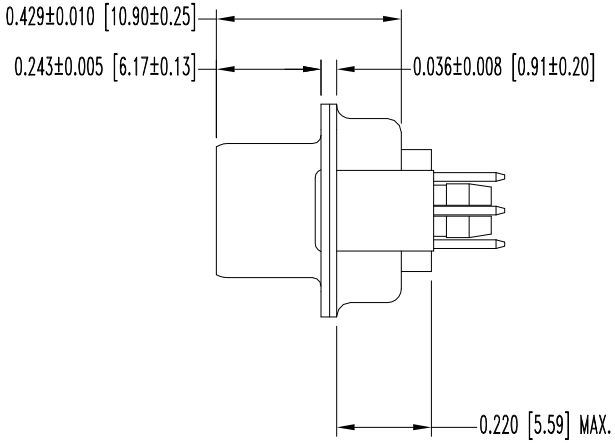

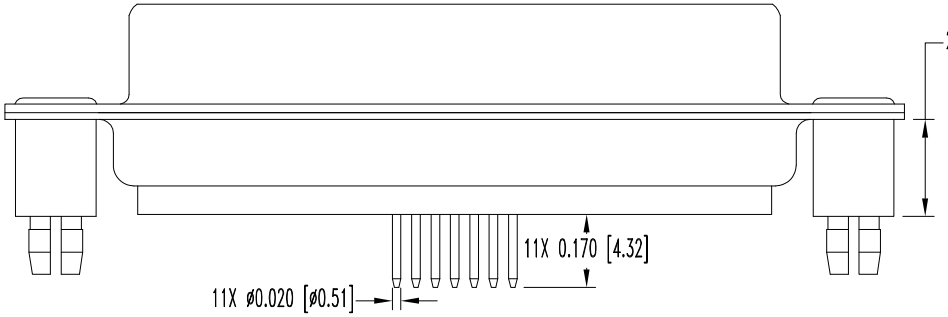

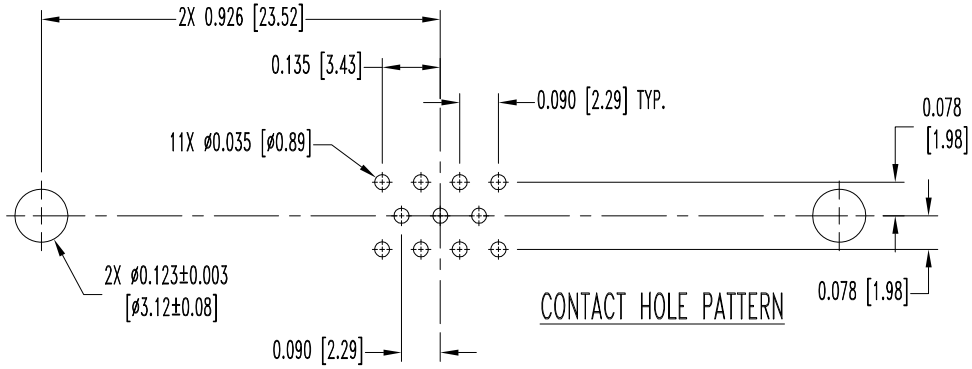

CONTACT HOLE PATTERN

NOTES:

1. MATERIALS AND FINISHES:
   - INSULATOR: GLASS FILLED POLYESTER PER MIL-M-24519, UL 94V-0, COLOR: BLUE.
   - CONTACTS: PRECISION MACHINED COPPER ALLOY, GOLD FLASH OVER NICKEL PLATE.
   - SHELLS: STEEL, ZINC PLATE WITH CHROMATE SEAL.
   - SWAGED SPACER: PHOSPHOR BRONZE WITH TIN PLATE.
2. ELECTRICAL CHARACTERISTICS:
   - CONTACT CURRENT RATING: 5 AMPERES NOMINAL.
   - INITIAL CONTACT RESISTANCE: 0.010 OHMS MAX.
   - INSULATOR RESISTANCE: 5 G OHMS.
   - WORKING VOLTAGE: 300 V.AC [rms]
3. TEMPERATURE RANGE: -55°C TO +125°C
4. DIMENSIONS ARE IN INCHES [MILLIMETERS].

POSITRONIC INDUSTRIES INC.
www.connectpositronic.com
FSCM 28198

DECIMAL TOL. ±0.015 [0.38]	CBDD	SCALE N.T.S.	DRAWN BY B SHELLEDY APPROVED BY R WILLIAMS
	TITLE CBDD15W4F3S6000		
ANGULAR TOL. ±5°	DATE 8-12-09	DRAWING NUMBER SK10949	REV. NC