TABLE OF CONTENTS

SHEET NO.	SHEET DESCRIPTION
1	NOTES AND BOM
2	CONFIGURATIONS
3-4	KEY CONFIGURATIONS
5	RECEPTACLE CONNECTOR ASSEMBLY
6	BACKSHELL NOTES
7	BACKSHELL
8	BACKSHELL CONFIGURATIONS

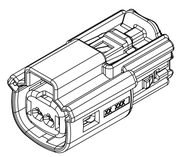

1x2

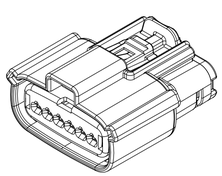

1x6

NOTES: VALID UNLESS OTHERWISE SPECIFIED

1. GENERAL:
a. APPLICATION SPECIFICATION SEE: AS-33472-100
-CONTAINS: PRODUCT INTRODUCTION, PRODUCT SUMMARY, CONNECTOR ASSEMBLY, PACKAGING INFORMATION, CONNECTOR MATING, SERVICE INSTRUCTIONS, ELECTRICAL CONTINUITY CHECKING, CRIMPING, AND TROUBLESHOOTING.
-DESIGNED TO MATE WITH DEVICE OR CONNECTOR AS SPECIFIED IN THE MATING INTERFACE/CONNECTOR DRAWINGS CHART.
*DENOTES DRAWINGS THAT CAN BE ACCESSED AT <http://ewcap.uscarteams.org/>.
-ASSEMBLY SHIPPED WITH PLR IN PRE-LOCK POSITION (SEE PLR PRE-LOCK VIEW SHEET 5).
b. PRODUCT SPECIFICATION SEE:
-STANDARD CONFIGURATION: PS-33471-000
-UL V0 CONFIGURATION: PS-160105-0001
CONTAINS: PRODUCT INTRODUCTION, PRODUCT SUMMARY, RATINGS (CURRENT, TEMPERATURE, SEALING, AND FLAMMABILITY), TERMINALS, WIRE DIAMETER RANGE, PRODUCT VALIDATION, AND PRODUCT DEVIATIONS.
c. PACKAGING SPECIFICATION PER MOLEX DRAWING: SEE PACKAGING CHART
d. PARTS MUST BE IN COMPLIANCE TO MOLEX CHEMICAL SUBSTANCES FOR PRODUCTS AND PACKAGING SPECIFICATION: QEHS-699000-301
e. DATA MUST BE SUBMITTED UNDER THE MOLEX PART NUMBER TO IMDS (COMPANY ID#13255)

2. DESIGN - MATERIALS:
A2 a. FOR BILL OF MATERIALS SEE:
-STANDARD CONFIGURATION TBD
-UL V0 CONFIGURATION SD-160105-0002

3. DESIGN - GEOMETRY:
a. THE 3-D CAD DATA IS BASIC (WITHOUT TOLERANCE) AND MASTER FOR THIS PART WITH THE EXCEPTION OF UNDERLINED DIMENSIONS. DIMENSIONAL INFORMATION NOT SHOWN ON THIS DRAWING IS DEFINED BY THE DATA FILE AT ITS LATEST REVISION.
b. GEOMETRIC DIMENSIONS AND TOLERANCES PER ASME Y14.5M-2009
c. EDGES AND UNDIMENSIONED DETAILS PER ISO13715
d. CORNERS SHOWN AS SHARP TO BE R 0.2 MAX.
e. LETTERING SHALL BE 0.15 MAX RAISED IN 0.25 MAX RECESS PAD. THIS INCLUDES RECYCLING CODE, CAVITY ID, VENDOR IDENTIFICATION, AND CUSTOMER MATERIAL NUMBER.
f. VISUAL DEFECTS SHALL MEET COSMETIC STANDARD PS-45499-002 (Class B).
g. LASER MARKING:
1. PART NUMBER
2. DAY OF THE YEAR
3. SHIFT
4. YEAR
FOR ADDITIONAL INFORMATION SEE SECTION 5 UNDER PROCEDURES IN ES-34735-008.

PACKAGING

DESCRIPTION	DRAWING NO.
1X2	PK-31300-635
1X6	PK-31300-903

MATING INTERFACE/CONNECTOR DRAWINGS

DESCRIPTION	INTERFACE DEFINITION	MOLEX INLINE
1X2	*150-S-002-1-Z05	SD-33481-0001
1X6	*150-S-006-1-Z03	SD-33481-0001

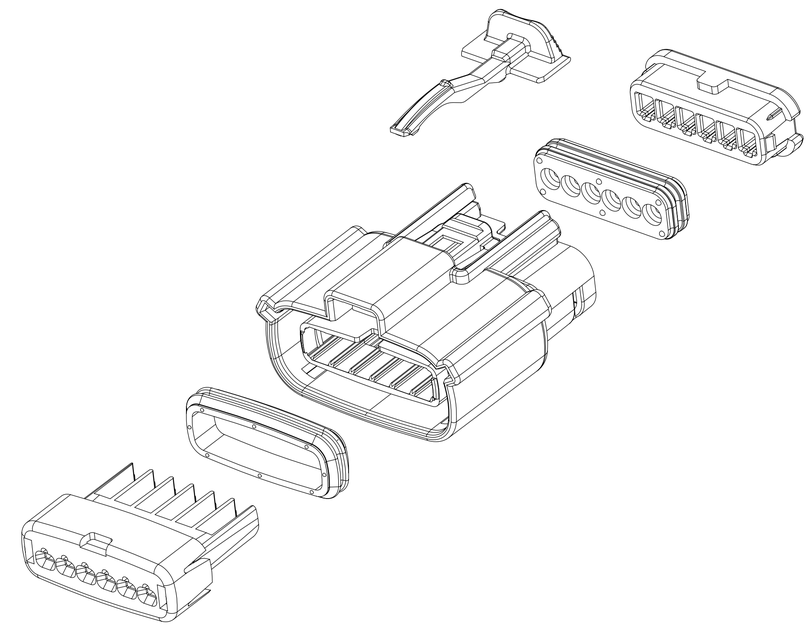

REV	REV DESCRIPTION
A2	CHANGE STANDARD CONFIGURATION TO TBD SEE NOTES 2.a
A1	UPDATED THE DRAWING FRAME
A	MINOR GEOMETRY CHANGE FOR UL V0
2	UPDATE VIEWSETS
1	INITIAL RELEASE

INSPECTION NUMBER LOG
LAST NUMBER: 11
ADDED: 11
REMOVED:

THIS DRAWING CONTAINS INFORMATION THAT IS PROPRIETARY TO MOLEX ELECTRONIC TECHNOLOGIES, LLC AND SHOULD NOT BE USED WITHOUT WRITTEN PERMISSION

DIMENSION UNITS	SCALE
MM	1.5:1

GENERAL TOLERANCES (UNLESS SPECIFIED)

ANGULAR TOL	±	1 °
4 PLACES	±	0
3 PLACES	±	0
2 PLACES	±	0.1
1 PLACE	±	0.2
0 PLACES	±	0

DRAFT WHERE APPLICABLE MUST REMAIN WITHIN DIMENSIONS

DIVISIONAL SYMBOLS
FA = 0
FC = 0
FD = 0

CURRENT REV DESC:

EC NO: CO-000012501
DRWN: Yann Chen 02-Sep-2022
CHK'D: Matt Young 08-May-2024
APPR: Elvis Song 10-May-2024

INITIAL REVISION:
DRWN: RFC_PLMIMP
APPR: KDEKOSHI 2016/06/14

THIRD ANGLE PROJECTION | DRAWING: D-SIZE | SERIES: 33471

molex

MX150 RCPT
SINGLE ROW SEALED ASSY MAT SEAL

PRODUCT SALES DRAWING

DOCUMENT NUMBER	DOC TYPE	DOC PART	REVISION
SD-33471-0001	PSD	001	A2

MATERIAL NUMBER	CUSTOMER	SHEET NUMBER
SEE NOTE 2a	GENERAL MARKET	1 OF 8

DOCUMENT STATUS	Production	RELEASE DATE	10-May-2024 07:23:52

TEMPLATE: PSDSTANDARD
REV:SEB2R0 /
DATE: 2020/01/14

SHEET DESCRIPTION

CONFIGURATIONS

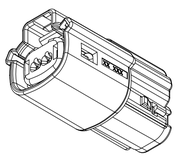

1x2 - STD

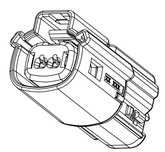

1x2 - UL V0*

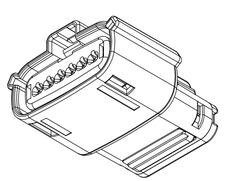

1x6 - STD

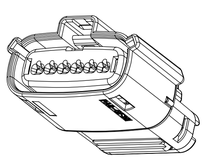

1x6 - UL V0*

*MINOR GEOMETRY DIFFERENCE THAN STANDARD CONFIGUATION
SEE NOTES 1 & 2 FOR MORE INFORMATION

THIS DRAWING CONTAINS INFORMATION THAT IS PROPRIETARY TO MOLEX ELECTRONIC TECHNOLOGIES, LLC AND SHOULD NOT BE USED WITHOUT WRITTEN PERMISSION

DIMENSION UNITS	MM	SCALE 1.5:1
GENERAL TOLERANCES (UNLESS SPECIFIED)		
ANGULAR TOL	±	1 °
4 PLACES	±	0
3 PLACES	±	0
2 PLACES	±	0.1
1 PLACE	±	0.2
0 PLACES	±	0

DIVISIONAL SYMBOLS: FA = 0, FC = 0, FD = 0

DRAFT WHERE APPLICABLE MUST REMAIN WITHIN DIMENSIONS

CURRENT REV DESC:

EC NO: CO-000012501
DRWN: Yann Chen 02-Sep-2022
CHK'D: Matt Young 08-May-2024
APPR: Elvis Song 10-May-2024

INITIAL REVISION:
DRWN: RFC_PLMIMP
APPR: KDEKOSKI 2016/06/14

molex

MX150 RCPT
SINGLE ROW SEALED ASSY MAT SEAL

PRODUCT SALES DRAWING

DOCUMENT NUMBER	DOC TYPE	DOC PART	REVISION
SD-33471-0001	PSD	001	A2

THIRD ANGLE PROJECTION	DRAWING	SERIES	MATERIAL NUMBER	CUSTOMER	SHEET NUMBER
	D-SIZE	33471	SEE NOTE 2a	GENERAL MARKET	2 OF 8

DOCUMENT STATUS	Production	RELEASE DATE	10-May-2024 07:23:52

TEMPLATE:SD-00-001-01
RD-00000 J
DATE: 2020/01/16

SHEET DESCRIPTION

KEY CONFIGURATIONS

1X2

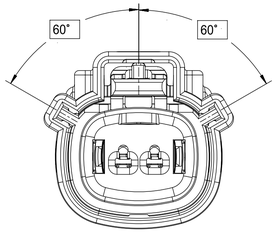

KEY A

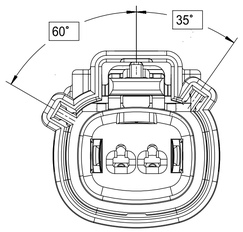

KEY B

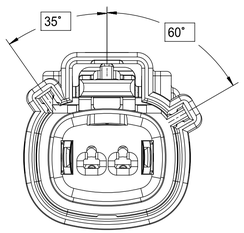

KEY C

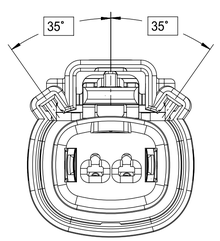

KEY D

THIS DRAWING CONTAINS INFORMATION THAT IS PROPRIETARY TO MOLEX ELECTRONIC TECHNOLOGIES, LLC AND SHOULD NOT BE USED WITHOUT WRITTEN PERMISSION

DIMENSION UNITS	MM	SCALE 3:1
GENERAL TOLERANCES (UNLESS SPECIFIED)		
ANGULAR TOL	±	1 °
4 PLACES	±	0
3 PLACES	±	0
2 PLACES	±	0.1
1 PLACE	±	0.2
0 PLACES	±	0

DIVISIONAL SYMBOLS: FA = 0, FC = 0, FP = 0

DRAFT WHERE APPLICABLE MUST REMAIN WITHIN DIMENSIONS

CURRENT REV DESC:

EC NO: CO-000012501
DRWN: Yann Chen 02-Sep-2022
CHK'D: Matt Young 08-May-2024
APPR: Elvis Song 10-May-2024

INITIAL REVISION:
DRWN: RFC_PLMIMP
APPR: KDEKOSKI 2016/06/14

THIRD ANGLE PROJECTION | DRAWING: D-SIZE | SERIES: 33471

molex

MX150 RCPT
SINGLE ROW SEALED ASSY MAT SEAL

PRODUCT SALES DRAWING

DOCUMENT NUMBER	DOC TYPE	DOC PART	REVISION
SD-33471-0001	PSD	001	A2

MATERIAL NUMBER	CUSTOMER	SHEET NUMBER
SEE NOTE 2a	GENERAL MARKET	3 OF 8

DOCUMENT STATUS	Production	RELEASE DATE	10-May-2024 07:23:52

FORMAT: master-8ump-a2
SIZE: 420x297
DATE: 2020/01/10

SHEET DESCRIPTION

KEY CONFIGURATIONS CONT.

1X6

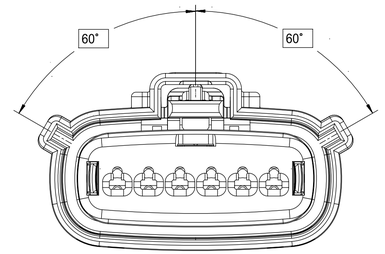

KEY A

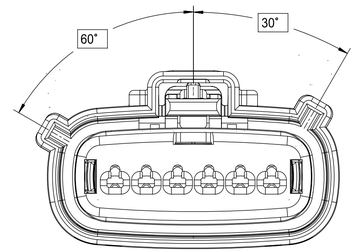

KEY B

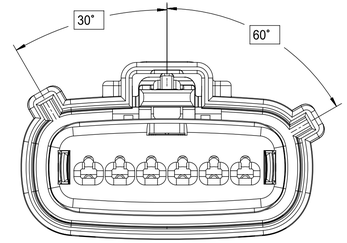

KEY C

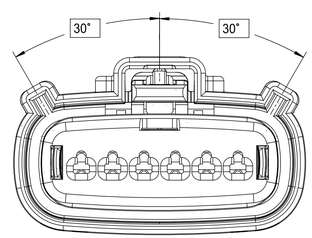

KEY D

DOCUMENT STATUS	Production	RELEASE DATE	10-May-2024 07:23:52

THIS DRAWING CONTAINS INFORMATION THAT IS PROPRIETARY TO MOLEX ELECTRONIC TECHNOLOGIES, LLC AND SHOULD NOT BE USED WITHOUT WRITTEN PERMISSION

DIMENSION UNITS	SCALE
MM	3:1

GENERAL TOLERANCES (UNLESS SPECIFIED)

ANGULAR TOL	±	1 °
4 PLACES	±	0
3 PLACES	±	0
2 PLACES	±	0.1
1 PLACE	±	0.2
0 PLACES	±	0

DRAFT WHERE APPLICABLE MUST REMAIN WITHIN DIMENSIONS

DIVISIONAL SYMBOLS: FA = 0, FC = 0, FP = 0

CURRENT REV DESC:

EC NO: CO-000012501
DRWN: Yann Chen 02-Sep-2022
CHK'D: Matt Young 08-May-2024
APPR: Elvis Song 10-May-2024

INITIAL REVISION:
DRWN: RFC_PLMIMP
APPR: KDEKOSKI 2016/06/14

THIRD ANGLE PROJECTION | DRAWING: D-SIZE | SERIES: 33471

molex

MX150 RCPT
SINGLE ROW SEALED ASSY MAT SEAL

PRODUCT SALES DRAWING

DOCUMENT NUMBER	DOC TYPE	DOC PART	REVISION
SD-33471-0001	PSD	001	A2

MATERIAL NUMBER	CUSTOMER	SHEET NUMBER
SEE NOTE 2a	GENERAL MARKET	4 OF 8

FORMAT: master-Burnt-D
REVISION: J
DATE: 2020/01/14

SHEET DESCRIPTION

RECEPTACLE CONNECTOR ASSEMBLY - STD

CHARTED DIMENSIONS

DESCRIPTION	DIMENSIONS					
	A	B	C	D	E	F
1X2	19.40	1.75	21.73	20.55	37.65	19.64
1X6	32.75	1.75	35.21	19.90	37.65	N/A
1X6 UL V0	N/A	1.75	35.23	19.90	37.65	33.64

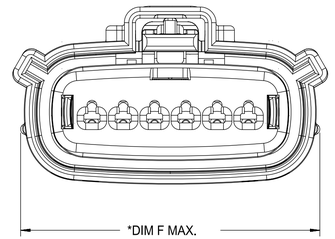

*APPLIE TO UL V0 CONFIGURATIONS ONLY

11

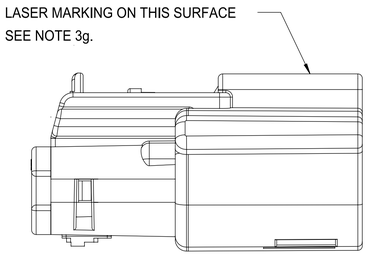

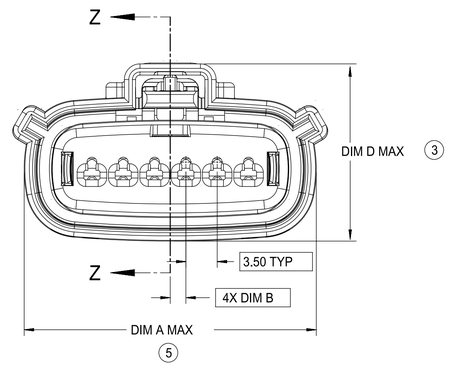

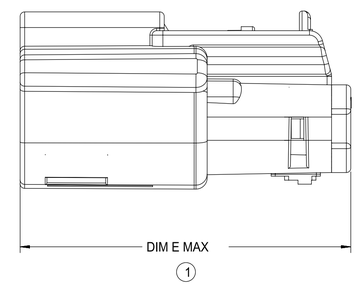

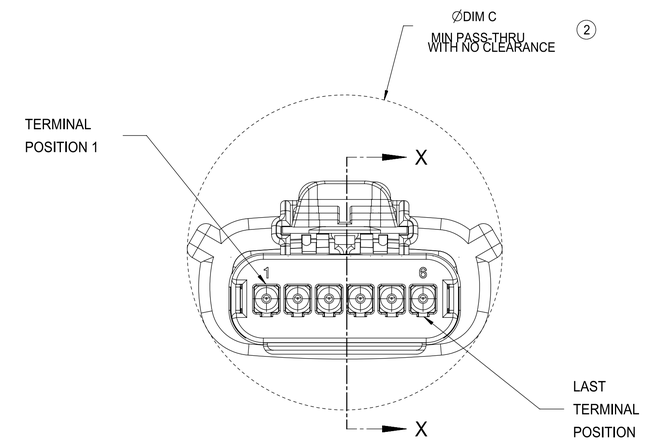

REAR VIEW
(WIRE HARNESS SIDE)

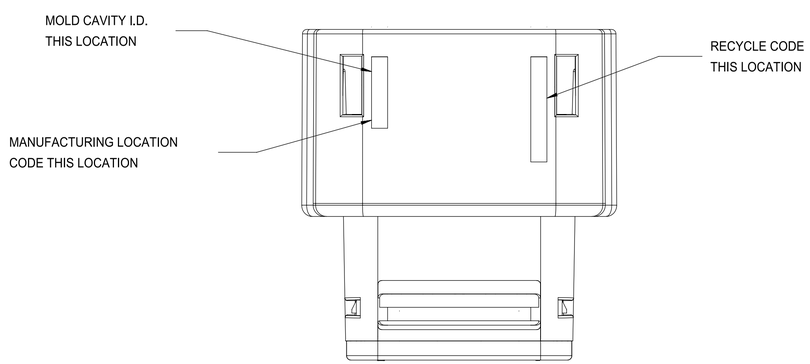

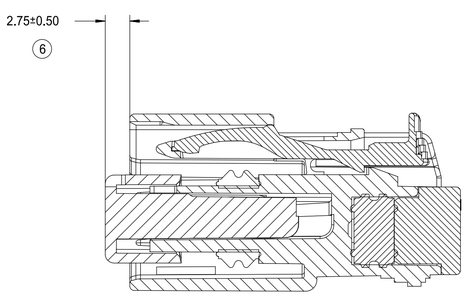

PRIMARY LOCK REINFORCEMENT (PLR) SHOWN
IN PRE-STAGED POSITION

SECTION Z-Z

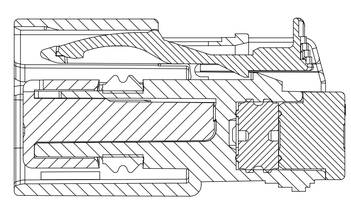

PRIMARY LOCK REINFORCEMENT (PLR) SHOWN
IN FINAL-LOCK POSITION

SECTION X-X

THIS DRAWING CONTAINS INFORMATION THAT IS PROPRIETARY TO MOLEX ELECTRONIC TECHNOLOGIES, LLC AND SHOULD NOT BE USED WITHOUT WRITTEN PERMISSION

DIMENSION UNITS	SCALE
MM	3:1

GENERAL TOLERANCES (UNLESS SPECIFIED)

ANGULAR TOL	±	1 °
4 PLACES	±	0
3 PLACES	±	0
2 PLACES	±	0.1
1 PLACE	±	0.2
0 PLACES	±	0

DRAFT WHERE APPLICABLE MUST REMAIN WITHIN DIMENSIONS

DIVISIONAL SYMBOLS: FA = 0, FC = 0, FD = 0

CURRENT REV DESC:

EC NO: CO-000012501
DRWN: Yann Chen 02-Sep-2022
CHK'D: Matt Young 08-May-2024
APPR: Elvis Song 10-May-2024

INITIAL REVISION:
DRWN: RFC_PLMIMP
APPR: KDEKOSKI 2016/06/14

THIRD ANGLE PROJECTION | DRAWING: D-SIZE | SERIES: 33471

molex

MX150 RCPT
SINGLE ROW SEALED ASSY MAT SEAL

PRODUCT SALES DRAWING

DOCUMENT NUMBER	DOC TYPE	DOC PART	REVISION
SD-33471-0001	PSD	001	A2

MATERIAL NUMBER	CUSTOMER	SHEET NUMBER
SEE NOTE 2a	GENERAL MARKET	5 OF 8

DOCUMENT STATUS	Production	RELEASE DATE	10-May-2024 07:23:52

TEMPLATE FORMATS
REVISION: J
DATE: 2020/01/16

SHEET DESCRIPTION

BACKSHELL NOTES

BACKSHELL NOTES: VALID UNLESS OTHERWISE SPECIFIED

1. GENERAL:

a. APPLICATION SPECIFICATION SEE: AS-34951-001

-DESIGNED TO MATE WITH RECEPTACLE SEALED ASSEMBLY
SPECIFIED IN MOLEX DRAWING SD-33471-0001.
-SYSTEM TO BE USED WITH WIRE WITHIN DIAMETER RANGE OF 1.2mm TO 2.69mm.
-COMPONENTS ARE OPTIONAL AND MUST BE PURCHASED SEPERATELY.
-BACKSHELL DESIGN IS OWNED BY SCHLEMMER.
-FOR ADDITIONAL INFORMATION SEE THE BACKSHELL COMPONENT DRAWING SD-34949-0001.

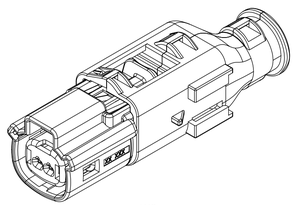

1X2

BACKSHELL CUSTOMER
MODEL NUMBER LEGEND

34949-XXXX

CUSTOMER MODEL COMPONENTS
0 - BACKSHELL ONLY
1 - BACKSHELL & MX150 HOUSING KEY A ASSEMBLY
2 - BACKSHELL & MX150 HOUSING KEY B ASSEMBLY
3 - BACKSHELL & MX150 HOUSING KEY C ASSEMBLY
4 - BACKSHELL & MX150 HOUSING KEY D ASSEMBLY

BACKSHELL FEATURES
1 - WITH RIBS
2 - WITHOUT RIBS

MX150 CIRCUIT SIZE 02, 03, 04, 05, 06

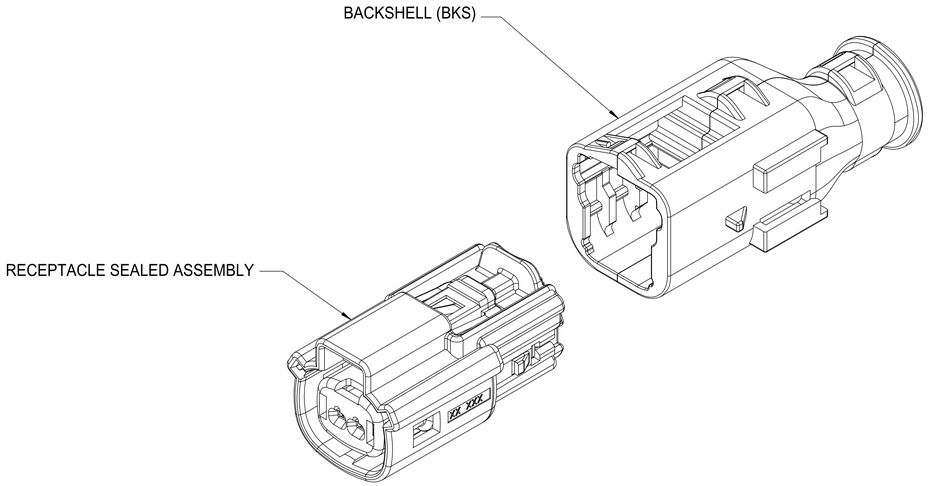

THIS DRAWING CONTAINS INFORMATION THAT IS PROPRIETARY TO MOLEX ELECTRONIC TECHNOLOGIES, LLC AND SHOULD NOT BE USED WITHOUT WRITTEN PERMISSION

DIMENSION UNITS: MM	SCALE: 4:1	
GENERAL TOLERANCES (UNLESS SPECIFIED)		
ANGULAR TOL	±	1 °
4 PLACES	±	0
3 PLACES	±	0
2 PLACES	±	0.1
1 PLACE	±	0.2
0 PLACES	±	0

DIVISIONAL SYMBOLS: FA = 0, FC = 0, FP = 0

DRAFT WHERE APPLICABLE MUST REMAIN WITHIN DIMENSIONS

CURRENT REV DESC:

EC NO: CO-000012501
DRWN: Yann Chen 02-Sep-2022
CHK'D: Matt Young 08-May-2024
APPR: Elvis Song 10-May-2024

INITIAL REVISION:
DRWN: RFC_PLMIMP
APPR: KDEKOSKI 2016/06/14

molex

MX150 RCPT
SINGLE ROW SEALED ASSY MAT SEAL

PRODUCT SALES DRAWING

DOCUMENT NUMBER	DOC TYPE	DOC PART	REVISION
SD-33471-0001	PSD	001	A2

THIRD ANGLE PROJECTION	DRAWING	SERIES	MATERIAL NUMBER	CUSTOMER	SHEET NUMBER
	D-SIZE	33471	SEE NOTE 2a	GENERAL MARKET	6 OF 8

DOCUMENT STATUS	Production	RELEASE DATE	10-May-2024 07:23:52

TEMPLATE: molex-dual-sizeD
REVISION: J
DATE: 2020/01/14

SHEET DESCRIPTION

BACKSHELL

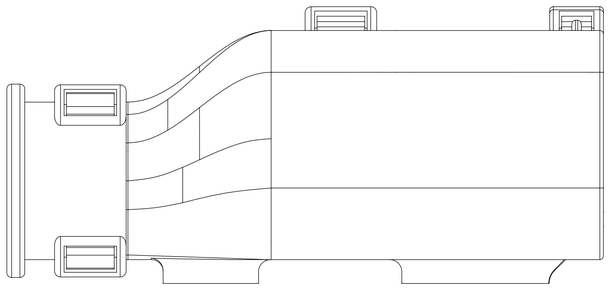

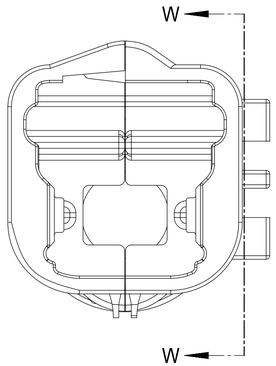

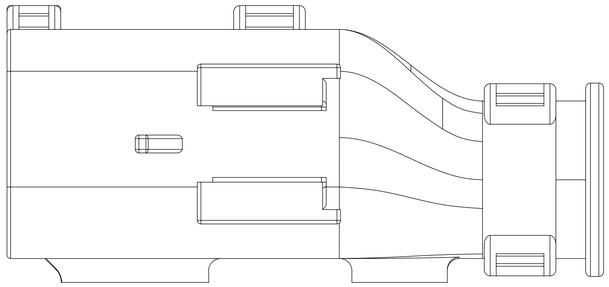

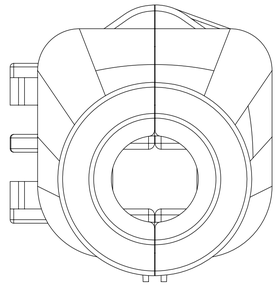

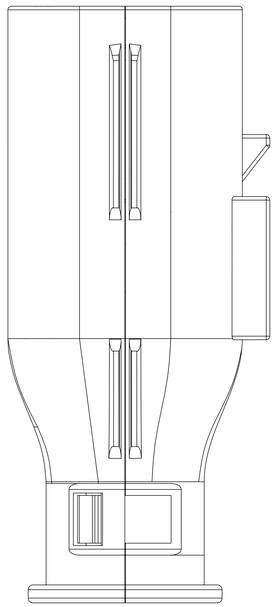

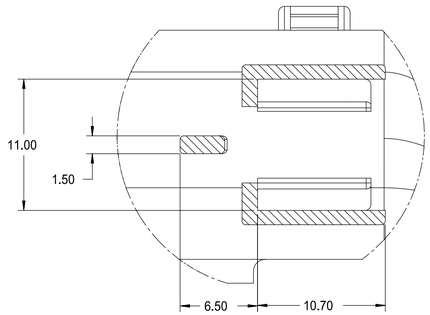

Partial W-W
SCALE 4:1

THIS DRAWING CONTAINS INFORMATION THAT IS PROPRIETARY TO MOLEX ELECTRONIC TECHNOLOGIES, LLC AND SHOULD NOT BE USED WITHOUT WRITTEN PERMISSION

DIMENSION UNITS	MM	
SCALE	4:1	
GENERAL TOLERANCES (UNLESS SPECIFIED)		
ANGULAR TOL	±	1 °
4 PLACES	±	0
3 PLACES	±	0
2 PLACES	±	0.1
1 PLACE	±	0.2
0 PLACES	±	0

DIVISIONAL SYMBOLS: FA = 0, FC = 0, FP = 0

DRAFT WHERE APPLICABLE MUST REMAIN WITHIN DIMENSIONS

CURRENT REV DESC:

EC NO: CO-000012501
DRWN: Yann Chen 02-Sep-2022
CHK'D: Matt Young 08-May-2024
APPR: Elvis Song 10-May-2024

INITIAL REVISION:
DRWN: RFC_PLMIMP
APPR: KDEKOSKI 2016/06/14

molex

MX150 RCPT
SINGLE ROW SEALED ASSY MAT SEAL

PRODUCT SALES DRAWING

DOCUMENT NUMBER	DOC TYPE	DOC PART	REVISION
SD-33471-0001	PSD	001	A2

THIRD ANGLE PROJECTION	DRAWING	SERIES	MATERIAL NUMBER	CUSTOMER	SHEET NUMBER
	D-SIZE	33471	SEE NOTE 2a	GENERAL MARKET	7 OF 8

DOCUMENT STATUS	Production	RELEASE DATE	10-May-2024 07:23:52

TEMPLATE: creation-drupmdx2D
DOC FORMAT: 3
DATE: 2020/01/14

SHEET DESCRIPTION

BACKSHELL CONFIGURATIONS

CHARTED DIMENSIONS	
DESCRIPTION	DIMENSIONS
	G
1X2	26.00

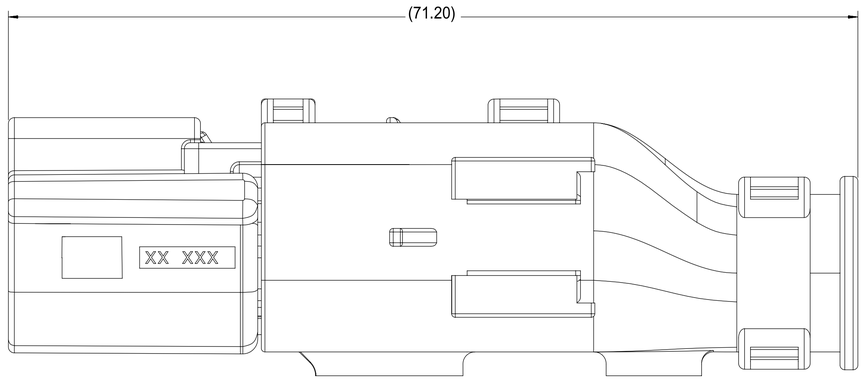

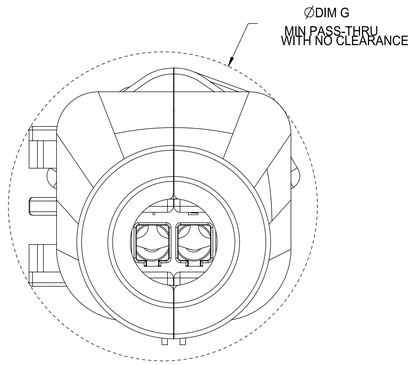

RECEPTACLE SEALED ASSEMBLY WITH RECEPTACLE BACKSHELL

THIS DRAWING CONTAINS INFORMATION THAT IS PROPRIETARY TO MOLEX ELECTRONIC TECHNOLOGIES, LLC AND SHOULD NOT BE USED WITHOUT WRITTEN PERMISSION

FA =	0
FC =	0
FP =	0

DIVISIONAL SYMBOLS

DIMENSION UNITS	SCALE
MM	4:1

GENERAL TOLERANCES (UNLESS SPECIFIED)		
ANGULAR TOL	±	1 °
4 PLACES	±	0
3 PLACES	±	0
2 PLACES	±	0.1
1 PLACE	±	0.2
0 PLACES	±	0

DRAFT WHERE APPLICABLE MUST REMAIN WITHIN DIMENSIONS

CURRENT REV DESC:

EC NO: CO-000012501
DRWN: Yann Chen 02-Sep-2022
CHK'D: Matt Young 08-May-2024
APPR: Elvis Song 10-May-2024

INITIAL REVISION:
DRWN: RFC_PLMIMP
APPR: KDEKOSKI 2016/06/14

molex

MX150 RCPT
SINGLE ROW SEALED ASSY MAT SEAL

PRODUCT SALES DRAWING

DOCUMENT NUMBER	DOC TYPE	DOC PART	REVISION
SD-33471-0001	PSD	001	A2

THIRD ANGLE PROJECTION	DRAWING	SERIES	MATERIAL NUMBER	CUSTOMER	SHEET NUMBER
	D-SIZE	33471	SEE NOTE 2a	GENERAL MARKET	8 OF 8

DOCUMENT STATUS	Production	RELEASE DATE	10-May-2024 07:23:52

FORMAT: master-Burnt-D
REVISION: J
DATE: 2020/01/14

TABLE OF CONTENTS

SHEET NO.	SHEET DESCRIPTION
1	NOTES
2	KEY CONFIGURATIONS
3	RECEPTACLE SEALED ASSEMBLY
4	BOM

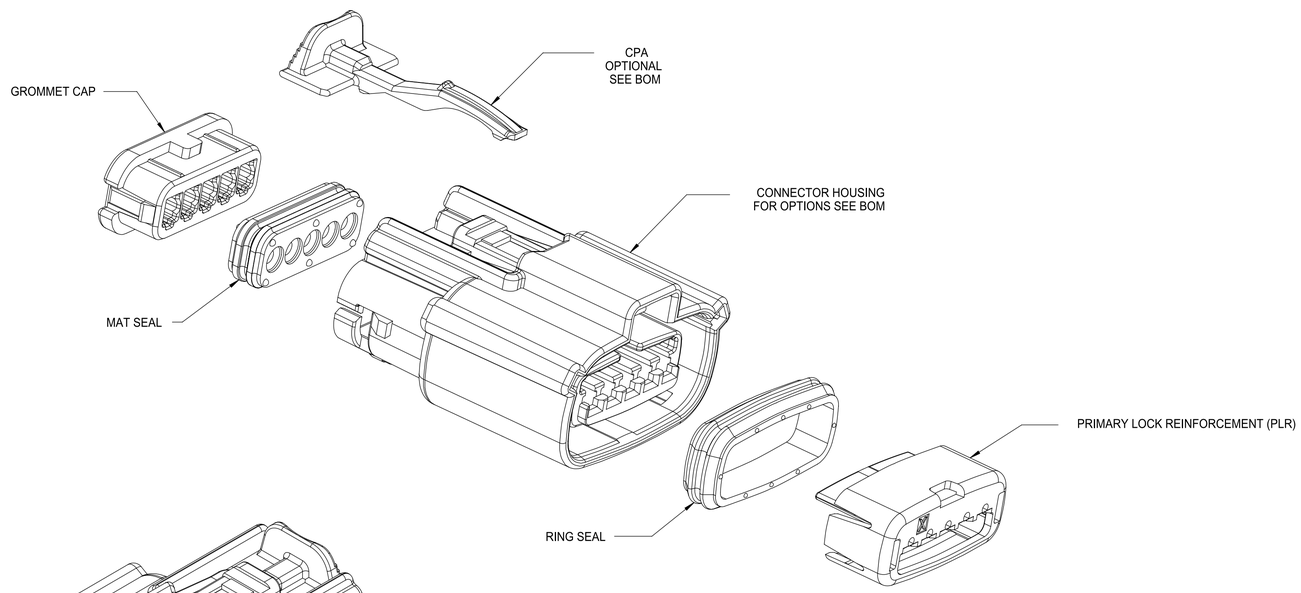

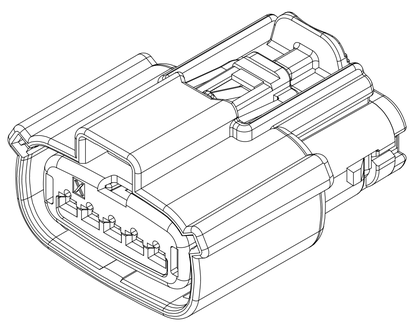

NOTES: VALID UNLESS OTHERWISE SPECIFIED

1. GENERAL:
a. APPLICATION SPECIFICATION SEE: AS-33472-100
-CONTAINS: PRODUCT INTRODUCTION, PRODUCT SUMMARY, CONNECTOR ASSEMBLY, PACKAGING INFORMATION, CONNECTOR MATING, SERVICE INSTRUCTIONS, ELECTRICAL CONTINUITY CHECKING, CRIMPING, AND TROUBLESHOOTING.
-DESIGNED TO MATE WITH DEVICE CONNECTION AS SPECIFIED IN DRAWING
M9 EWCAP 150-S-005-1-Z03, AVAILIBLE AT <http://ewcap.uscarteams.org/>.
-FOR 1.5mm RECEPTACLE TERMINALS TO BE USED WITH THIS ASSEMBLY. SEE MOLEX DRAWING SD-33012-002.
-SYSTEM TO BE USED WITH WIRE WITHIN DIAMETER RANGE OF 1.2mm TO 2.69mm.
-ASSEMBLY SHIPPED WITH PLR AND CPA IN PRE-LOCK POSITION (SEE SECTION Z-Z PRE-LOCK).
-IN THE EVENT THAT THE PLR IS FOUND IN THE SEATED (FINAL LOCK) POSITION, REFER TO MOLEX SPECIFICATION PS-34646-001, AVAILABLE AT www.molex.com <http://www.molex.com>.
-ASSEMBLY CONFORMS TO SAE/USCAR-2 REV.4 WITH THE FOLLOWING EXCEPTIONS:
ENGAGEMENT FORCE TO MOVE CPA FROM PRE-LOCK TO FINAL LOCK POSITION WHEN UNMATED: 40N MIN.
DISENGAGEMENT FORCE TO MOVE CPA FROM FINAL LOCK TO PRE-LOCK POSITION: 3N MIN, 40N MAX
TERMINAL INSERTION FORCE FOR WIRE DIAMETER ABOVE 2.5mm NOT EXCEEDING 2.69mm SHALL NOT EXCEED 40 NEWTONS.
b. PRODUCT SPECIFICATION SEE: PS-33471-000
CONTAINS: PRODUCT INTRODUCTION, PRODUCT SUMMARY, RATINGS (CURRENT, TEMPERATURE, SEALING, AND FLAMMABILITY), AND PRODUCT VALIDATION.
c. PACKAGING SPECIFICATION PER MOLEX DRAWING: PK-31300-903
d. PARTS MUST BE IN COMPLIANCE TO MOLEX CHEMICAL SUBSTANCES FOR PRODUCTS AND PACKAGING SPECIFICATION: ES-40000-5016
e. DATA MUST BE SUBMITTED UNDER THE MOLEX PART NUMBER TO IMDS (COMPANY ID#13255)

2. DESIGN - MATERIALS:
a. SEE BOM TABLE

3. DESIGN - GEOMETRY:
a. THIS IS A 100% CAD GENERATED PART. THE CAD MATHEMATICAL DATA IS THE MASTER FOR THIS PART. FOR DIMENSIONAL OR ANY INFORMATION NOT SHOWN ON THIS DRAWING, ANALYZE THE CAD MODEL.
b. GEOMETRIC DIMENSIONS AND TOLERANCES PER ASME Y14.5M - 1994
c. EDGES AND UNDIMENSIONED DETAILS PER ISO13715
d. CORNERS SHOWN AS SHARP TO BE R 0.2 MAX.
e. LETTERING SHALL BE 0.15 MAX RAISED IN 0.25 MAX RECESS PAD. THIS INCLUDES RECYCLING CODE, CAVITY ID, VENDOR IDENTIFICATION, AND CUSTOMER MATERIAL NUMBER.
f. VISUAL DEFECTS SHALL MEET COSMETIC STANDARD PS-45499-002 (Class B)
g. LASER MARKING: TBD

REV	DESCRIPTION
M10	UPDATED ALL KEY B PRODUCTS' STATUS TO "SALEABLE"
M9	UPDATED NOTE 1a
M8	UPDATED THE DRAWING FRAME
M7	ADD NEW P/N 33471-0542
M6	CHANGE THE STATUS TO SALEABLE FROM TOOLED BUT NOT VALIDATED FOR DK GREY AND ST GREY
M5	UPDATE 33471-0503 33471-0504 33471-0508 33471-0509 PRODUCTION STATUS
M4	UPDATED SHEET 3 NOMENCLATURE
M3	UPDATED PACKAGING DIMENSIONS
M2	UPDATED COMPONENT BOM
M1	UPDATED WIRE DIAMETER RANGE
M	UPDATED NOTE 1c
L	UPDATE PER PRODUCTION DESIGN

INSPECTION BALLOON NUMBER LOG

PER DRAWING REVISION: M3

LAST BALLOON NUMBER USED: 4

ADDED BALLOON NUMBERS: 1a, 2a

REMOVED BALLOON NUMBERS:

THIS DRAWING CONTAINS INFORMATION THAT IS PROPRIETARY TO MOLEX ELECTRONIC TECHNOLOGIES, LLC AND SHOULD NOT BE USED WITHOUT WRITTEN PERMISSION

FUNCTIONAL SYMBOLS
FA = 0
FC = 0
FP = 0
DIVISIONAL SYMBOLS

DIMENSION UNITS	SCALE
mm	3:1

GENERAL TOLERANCES (UNLESS SPECIFIED)

ANGULAR TOL	± 3'
4 PLACES	±
3 PLACES	±
2 PLACES	± 0.100
1 PLACE	± 0.20
0 PLACES	±

DRAFT WHERE APPLICABLE MUST REMAIN WITHIN DIMENSIONS

CURRENT REV DESC: Delete description of blade in note due to mated blade SD-33481-051 is obsolete

STATUS: Production
DRWN: Yu Chao Fu 2023-05-25
CHK'D: Yann Chen 2023-06-09
APPR: Katy Boruszewski 2023-06-12

THIRD ANGLE PROJECTION

molex

MX150 1X5 RECEPTACLE
SEALED ASSEMBLY MAT SEAL

PRODUCT SALES DRAWING

DOCUMENT NUMBER	DOC TYPE	DOC PART	REVISION
SD-33471-051	PSD	001	M10

DRAWING	SERIES	MATERIAL NUMBER	CUSTOMER	SHEET NUMBER
D-SIZE	33471	SEE BOM	GENERAL MARKET	1 OF 5

FORMAT TC-Sheet42
REVISION: B
DATE: 2022/Dec/1

KEY CONFIGURATIONS

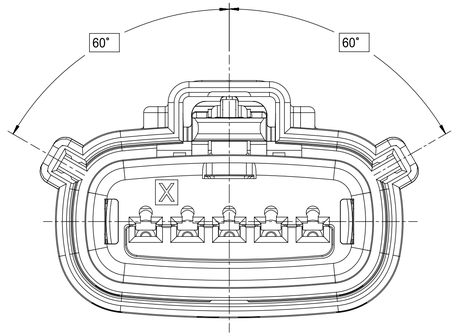

KEY A

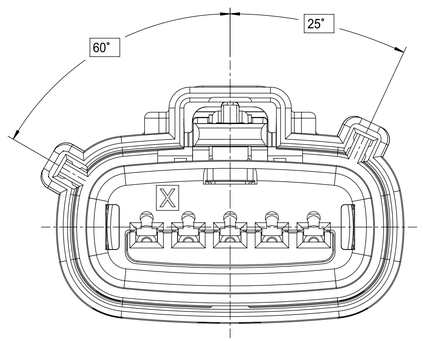

KEY B

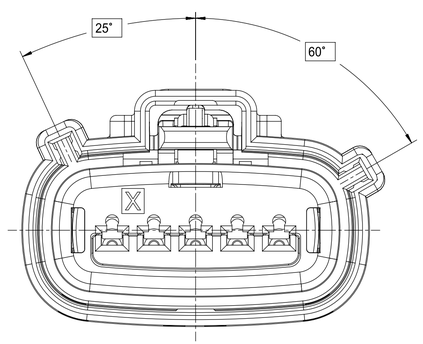

KEY C

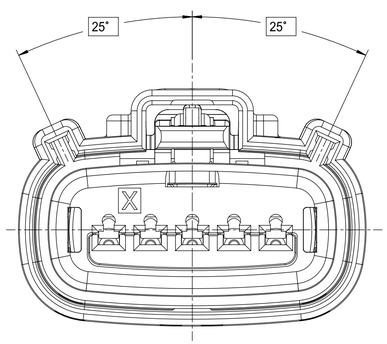

KEY D

FUNCTIONAL SYMBOLS	THIS DRAWING CONTAINS INFORMATION THAT IS PROPRIETARY TO MOLEX ELECTRONIC TECHNOLOGIES, LLC AND SHOULD NOT BE USED WITHOUT WRITTEN PERMISSION		
FA = 0	DIMENSION UNITS: mm	SCALE: 4:1	CURRENT REV DESC: Delete description of blade in note due to mated blade SD-33481-051 is obsolete
FC = 0	GENERAL TOLERANCES (UNLESS SPECIFIED)		
FP = 0	ANGULAR TOL ± 3°		
	4 PLACES ±		
DIVISIONAL SYMBOLS	3 PLACES ±		
	2 PLACES ± 0.100		STATUS: Production
	1 PLACE ± 0.20		DRWN: Yu Chao Fu 2023-05-25
	0 PLACES ±		CHK'D: Yann Chen 2023-06-09
	DRAFT WHERE APPLICABLE MUST REMAIN WITHIN DIMENSIONS		APPR: Katy Boruszewski 2023-06-12

THIRD ANGLE PROJECTION	DRAWING	SERIES	MATERIAL NUMBER	CUSTOMER	SHEET NUMBER
	D-SIZE	33471	SEE BOM	GENERAL MARKET	2 OF 5

molex

MX150 1X5 RECEPTACLE
SEALED ASSEMBLY MAT SEAL

PRODUCT SALES DRAWING

DOCUMENT NUMBER	DOC TYPE	DOC PART	REVISION
SD-33471-051	PSD	001	M10

FORMAT TLANDHO
REVISION: B
DATE: 2020-06-01

RECEPTACLE SEALED ASSEMBLY

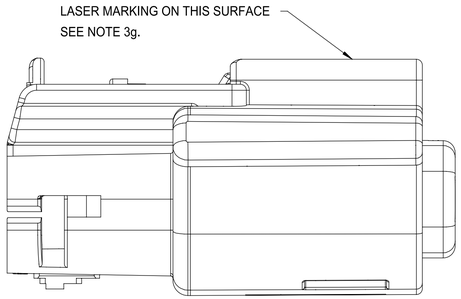

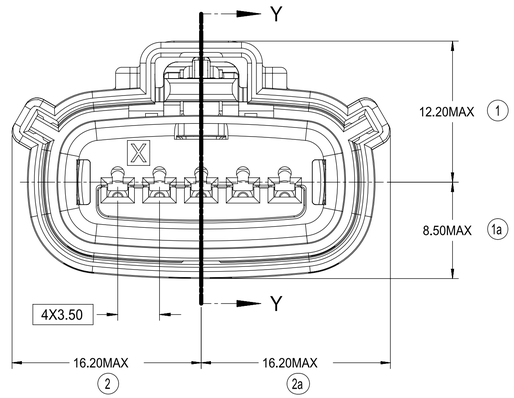

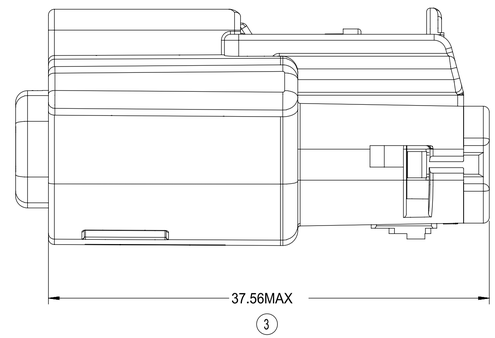

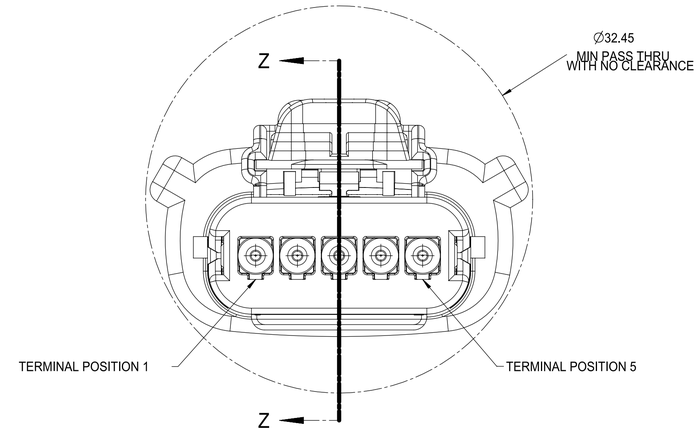

REAR VIEW
(WIRE HARNESS SIDE)

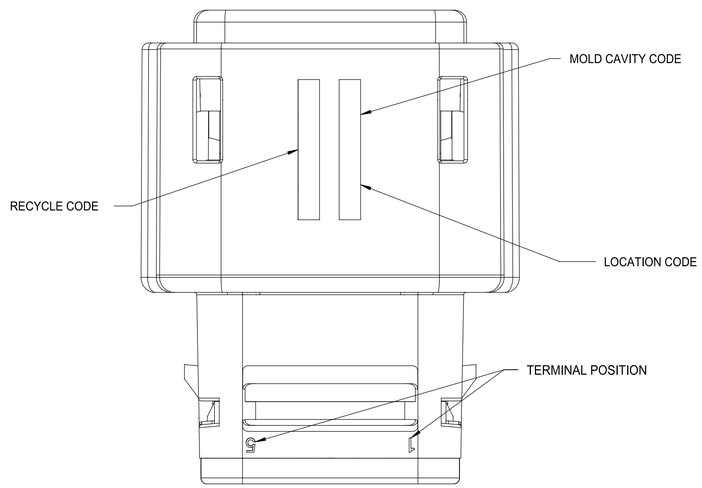

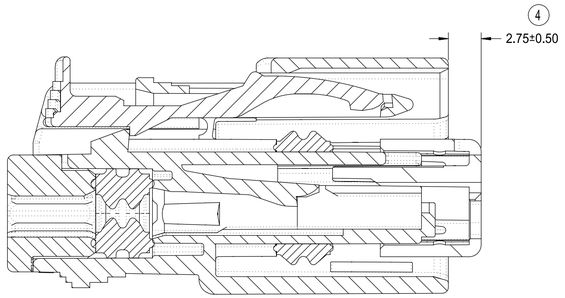

PRIMARY LOCK REINFORCEMENT (PLR) SHOWN
IN PRE-STAGED POSITION

SECTION Z-Z

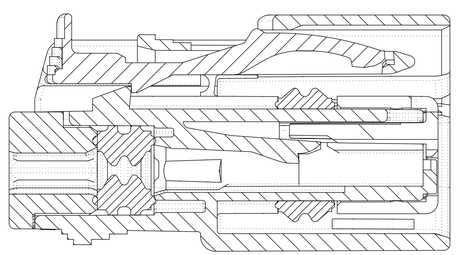

PRIMARY LOCK REINFORCEMENT (PLR) SHOWN
IN FINAL-LOCK POSITION

SECTION Y-Y

FUNCTIONAL SYMBOLS	THIS DRAWING CONTAINS INFORMATION THAT IS PROPRIETARY TO MOLEX ELECTRONIC TECHNOLOGIES, LLC AND SHOULD NOT BE USED WITHOUT WRITTEN PERMISSION		
FA = 0	DIMENSION UNITS: mm	SCALE: 4:1	CURRENT REV DESC: Delete description of blade in note due to mated blade SD-33481-051 is obsolete
FC = 0	GENERAL TOLERANCES (UNLESS SPECIFIED)		
FP = 0	ANGULAR TOL	± 3°	
DIVISIONAL SYMBOLS	4 PLACES	±	
	3 PLACES	±	
	2 PLACES	± 0.100	STATUS: Production
	1 PLACE	± 0.20	DRWN: Yu Chao Fu 2023-05-25
	0 PLACES	±	CHK'D: Yann Chen 2023-06-09
	DRAFT WHERE APPLICABLE MUST REMAIN WITHIN DIMENSIONS		APPR: Katy Boruszewski 2023-06-12

THIRD ANGLE PROJECTION	DRAWING	SERIES	MATERIAL NUMBER	CUSTOMER	SHEET NUMBER
	D-SIZE	33471	SEE BOM	GENERAL MARKET	3 OF 5

molex

MX150 1X5 RECEPTACLE
SEALED ASSEMBLY MAT SEAL

PRODUCT SALES DRAWING

DOCUMENT NUMBER	DOC TYPE	DOC PART	REVISION
SD-33471-051	PSD	001	M10

BOM SHEET 1

ASSEMBLY DESCRIPTION	ASSEMBLY PART NUMBER	A	B	C	D	C	D	GCO	GCP	CPA	1	2	3	4	5	STATUS	COMMENTS
KEY A W/ CPA, BLACK	33471-0541	A							GCP	CPA	1	2	3	4	5	SALEABLE	
KEY D W/ CPA, STONE GRAY	33471-0540						D	GCO		CPA						SALEABLE	
KEY C W/ CPA, DARK GRAY	33471-0539					C		GCO		CPA						SALEABLE	
KEY D, STONE GRAY	33471-0538						D	GCO								SALEABLE	
KEY C, DARK GRAY	33471-0537					C		GCO								SALEABLE	
KEY A W/ CPA, BLACK	33471-0536	A							GCP	CPA		2		4		SALEABLE	
VOID KEY	33471-0535																
KEY D, GREEN	33471-0534				D				GCP		1	2	3	4	5	OBSOLETE	
KEY C, BROWN	33471-0533			C					GCP		1	2	3	4	5	OBSOLETE	
KEY B, LIGHT GRAY	33471-0532		B						GCP		1	2	3	4	5	M10 SALEABLE	
KEY A, BLACK	33471-0531	A							GCP		1	2	3	4	5	SALEABLE	
VOID KEY	33471-0530																
KEY D W/ CPA, GREEN	33471-0529				D				GCP	CPA	1				5	OBSOLETE	
KEY C W/ CPA, BROWN	33471-0528			C					GCP	CPA	1				5	OBSOLETE	
KEY B W/ CPA, LIGHT GRAY	33471-0527		B						GCP	CPA	1				5	M10 SALEABLE	
KEY A W/ CPA, BLACK	33471-0526	A							GCP	CPA	1				5	SALEABLE	
VOID KEY	33471-0525																
KEY D, GREEN	33471-0524				D				GCP		1				5	OBSOLETE	
KEY C, BROWN	33471-0523			C					GCP		1				5	OBSOLETE	
KEY B, LIGHT GRAY	33471-0522		B						GCP		1				5	M10 SALEABLE	
KEY A, BLACK	33471-0521	A							GCP		1				5	SALEABLE	
VOID KEY	33471-0520																
KEY D W/ CPA, GREEN	33471-0519				D				GCP	CPA					5	OBSOLETE	
KEY C W/ CPA, BROWN	33471-0518			C					GCP	CPA					5	OBSOLETE	
KEY B W/ CPA, LIGHT GRAY	33471-0517		B						GCP	CPA					5	M10 SALEABLE	
KEY A W/ CPA, BLACK	33471-0516	A							GCP	CPA					5	SALEABLE	
VOID KEY	33471-0515																
KEY D, GREEN	33471-0514				D				GCP						5	OBSOLETE	
KEY C, BROWN	33471-0513			C					GCP						5	OBSOLETE	
KEY B, LIGHT GRAY	33471-0512		B						GCP						5	M10 SALEABLE	
KEY A, BLACK	33471-0511	A							GCP						5	SALEABLE	
VOID KEY	33471-0510																
KEY D W/ CPA, GREEN	33471-0509				D			GCO		CPA						NOT RECOMMENDED USE,PLEASE USE 33471-0540	
KEY C W/ CPA, BROWN	33471-0508			C				GCO		CPA						NOT RECOMMENDED USE,PLEASE USE 33471-0539	
KEY B W/ CPA, LIGHT GRAY	33471-0507		B					GCO		CPA						M10 SALEABLE	
KEY A W/ CPA, BLACK	33471-0506	A						GCO		CPA						SALEABLE	
VOID KEY	33471-0505																
KEY D, GREEN	33471-0504				D			GCO								NOT RECOMMENDED USE,PLEASE USE 33471-0538	
KEY C, BROWN	33471-0503			C				GCO								NOT RECOMMENDED USE,PLEASE USE 33471-0537	
KEY B, LIGHT GRAY	33471-0502		B					GCO								M10 SALEABLE	
KEY A, BLACK	33471-0501	A						GCO								SALEABLE	

BLOCKED TERMINAL

CAVITY WITH A NUMBER INDICATES BLOCKED TERMINAL POSITION
CAVITY WITHOUT A NUMBER INDICATES OPEN TERMINAL POSITION

DESCRIPTION	COLOR	MATERIAL
MAT SEAL	ROYAL BLUE	INHERENTLY LUBRICATED SILICONE
RING SEAL	ROYAL BLUE	INHERENTLY LUBRICATED SILICONE
PLR	NATURAL	SPS/NYLON GF20
CPA	RED	PBT GF30
GROMMET CAP (PLUGGED)	BLACK	SPS/NYLON GF20
GROMMET CAP (OPEN)	BLACK	SPS/NYLON GF20
HOUSING KEYING OPTION D	STONE GRAY	SPS/NYLON GF20
HOUSING KEYING OPTION C	DARK GRAY	SPS/NYLON GF20
HOUSING KEYING OPTION D	GREEN	SPS/NYLON GF20
HOUSING KEYING OPTION C	BROWN	SPS/NYLON GF20
HOUSING KEYING OPTION B	LIGHT GRAY	SPS/NYLON GF20
HOUSING KEYING OPTION A	BLACK	SPS/NYLON GF20

BOM/APPLICABLE COMPONENTS TABLE

LEGEND TABLE

ABREVIATION	COMPONENT
A	HOUSING KEY A
B	HOUSING KEY B
C	HOUSING KEY C
D	HOUSING KEY D
GCO	GROMMET CAP (OPEN)
GCP	GROMMET CAP (PLUGGED)
M	MAT SEAL
R	RING SEAL
P	PLR, STANDARD
CPA	CPA

FUNCTIONAL SYMBOLS
FA = 0
FC = 0
FP = 0
DIVISIONAL SYMBOLS

THIS DRAWING CONTAINS INFORMATION THAT IS PROPRIETARY TO MOLEX ELECTRONIC TECHNOLOGIES, LLC AND SHOULD NOT BE USED WITHOUT WRITTEN PERMISSION

DIMENSION UNITS	SCALE
mm	2:1

GENERAL TOLERANCES (UNLESS SPECIFIED)

ANGULAR TOL	± 3'
4 PLACES	±
3 PLACES	±
2 PLACES	± 0.100
1 PLACE	± 0.20
0 PLACES	±

DRAFT WHERE APPLICABLE MUST REMAIN WITHIN DIMENSIONS

CURRENT REV DESC: Delete description of blade in note due to mated blade SD-33481-051 is obsolete

STATUS: Production
DRWN: Yu Chao Fu 2023-05-25
CHK'D: Yann Chen 2023-06-09
APPR: Katy Boruszewski 2023-06-12

THIRD ANGLE PROJECTION | DRAWING: D-SIZE | SERIES: 33471

molex

MX150 1X5 RECEPTACLE
SEALED ASSEMBLY MAT SEAL

PRODUCT SALES DRAWING

DOCUMENT NUMBER	DOC TYPE	DOC PART	REVISION
SD-33471-051	PSD	001	M10

MATERIAL NUMBER	CUSTOMER	SHEET NUMBER
SEE BOM	GENERAL MARKET	4 OF 5

FORMAT TC-Sheet40
REVISION: B
DATE: 2020/8/31

BOM SHEET 2

ASSEMBLY DESCRIPTION	ASSEMBLY PART NUMBER	A	B	C	D	C	D	A	GCO	GCP	CPA	1	2	3	4	5	STATUS	COMMENTS
KEY A W/CPA, YELLOW	33471-0542							A	GCO		CPA						SALEABLE	

BLOCKED TERMINAL

CAVITY WITH A NUMBER INDICATES BLOCKED TERMINAL POSITION
CAVITY WITHOUT A NUMBER INDICATES OPEN TERMINAL POSITION

DESCRIPTION	COLOR	MATERIAL
MAT SEAL	ROYAL BLUE	INHERENTLY LUBRICATED SILICONE
RING SEAL	ROYAL BLUE	INHERENTLY LUBRICATED SILICONE
PLR	NATURAL	SPS/NYLON GF20
CPA	RED	PBT GF30
GROMMET CAP (PLUGGED)	BLACK	SPS/NYLON GF20
GROMMET CAP (OPEN)	BLACK	SPS/NYLON GF20
HOUSING KEYING OPTION A	YELLOW	SPS/NYLON GF20
HOUSING KEYING OPTION D	STONE GRAY	SPS/NYLON GF20
HOUSING KEYING OPTION C	DARK GRAY	SPS/NYLON GF20
HOUSING KEYING OPTION D	GREEN	SPS/NYLON GF20
HOUSING KEYING OPTION C	BROWN	SPS/NYLON GF20
HOUSING KEYING OPTION B	LIGHT GRAY	SPS/NYLON GF20
HOUSING KEYING OPTION A	BLACK	SPS/NYLON GF20

BOM/APPLICABLE COMPONENTS TABLE

THIS DRAWING CONTAINS INFORMATION THAT IS PROPRIETARY TO MOLEX ELECTRONIC TECHNOLOGIES, LLC AND SHOULD NOT BE USED WITHOUT WRITTEN PERMISSION

FUNCTIONAL SYMBOLS
FA = 0
FC = 0
FP = 0

DIVISIONAL SYMBOLS

DIMENSION UNITS	SCALE
mm	2:1

GENERAL TOLERANCES (UNLESS SPECIFIED)	
ANGULAR TOL	± 3'
4 PLACES	±
3 PLACES	±
2 PLACES	± 0.100
1 PLACE	± 0.20
0 PLACES	±

DRAFT WHERE APPLICABLE MUST REMAIN WITHIN DIMENSIONS

CURRENT REV DESC: Delete description of blade in note due to mated blade SD-33481-051 is obsolete

STATUS: Production
DRWN: Yu Chao Fu 2023-05-25
CHK'D: Yann Chen 2023-06-09
APPR: Katy Boruszewski 2023-06-12

THIRD ANGLE PROJECTION | DRAWING: D-SIZE | SERIES: 33471

molex

MX150 1X5 RECEPTACLE
SEALED ASSEMBLY MAT SEAL

PRODUCT SALES DRAWING

DOCUMENT NUMBER	DOC TYPE	DOC PART	REVISION
SD-33471-051	PSD	001	M10

MATERIAL NUMBER	CUSTOMER	SHEET NUMBER
SEE BOM	GENERAL MARKET	5 OF 5

TABLE OF CONTENTS	
SHEET NO.	SHEET DESCRIPTION
1	NOTES AND BOM
2	CPA DETAIL

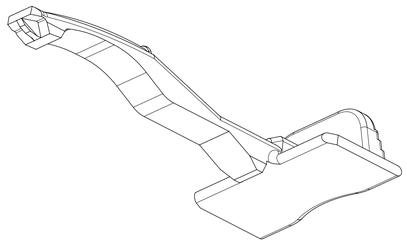

SCALE 5:1

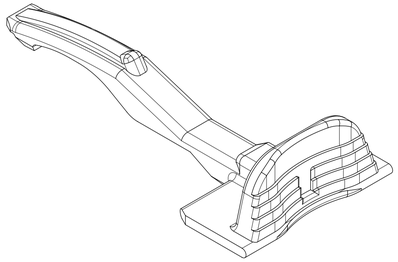

SCALE 5:1

CPA NOTES: VALID UNLESS OTHERWISE SPECIFIED

1. GENERAL:
a. APPLICATION SPECIFICATION SEE: AS-33611-001 AND AS-33472-100
DESIGNED TO MATE WITH RECEPTACLE SEALED ASSEMBLY AS SPECIFIED IN THE BOM
b. PRODUCT SPECIFICATION SEE: PS-33472-000 AND PS-33471-000 AND PS-33476-000.
c. PACKAGING SPECIFICATION SEE: PK-30907-812.
d. PARTS MUST BE IN COMPLIANCE TO MOLEX CHEMICAL SUBSTANCES FOR PRODUCTS AND PACKAGING SPECIFICATION: QEHS-699000-300
e. DATA MUST BE SUBMITTED UNDER THE MOLEX PART NUMBER TO IMDS (COMPANY ID#13255)

2. DESIGN - MATERIALS:
a. PBT GF30
b. RED

3. DESIGN GEOMETRY:
a. THIS IS A 100% CAD GENERATED PART. THE CAD MATHEMATICAL DATA IS THE MASTER FOR THIS PART. FOR DIMENSIONAL OR ANY INFORMATION NOT SHOWN ON THIS DRAWING, ANALYZE THE CAD MODEL.
b. GEOMETRIC DIMENSIONS AND TOLERANCES PER ASME Y14.5M - 1994
c. EDGES AND UNDIMENSIONED DETAILS PER ISO13715
d. CORNERS SHOWN AS SHARP TO BE R 0.2 MAX.
e. VISUAL DEFECTS SHALL MEET COSMETIC STANDARDS PS-45499-002 (CLASS B).

MOLEX PART NUMBER	STATUS	MATING ASSEMBLY DESCRIPTION	MATING ASSEMBLY DRAWING
33611-0001	SALEABLE	MX150 1X2 WAY RECEPTACLE MAT SEAL	SD-33471-021
		MX150 1X3 WAY RECEPTACLE MAT SEAL	SD-33471-031
		MX150 1X4 WAY RECEPTACLE MAT SEAL	SD-33471-041
		MX150 1X5 WAY RECEPTACLE MAT SEAL	SD-33471-051
		MX150 1X6 WAY RECEPTACLE MAT SEAL	SD-33471-061
		MX150 2X2 WAY RECEPTACLE MAT SEAL	SD-33472-041
		MX150 2X3 WAY RECEPTACLE MAT SEAL	SD-33472-061
		MX150 2X3 WAY RECEPTACLE MAT SEAL W/CLIPSLOT	SD-33472-071
		MX150 2X4 WAY RECEPTACLE MAT SEAL	SD-33472-081
		MX150 2X4 WAY RECEPTACLE MAT SEAL W/CLIPSLOT	SD-33472-091
		MX150 2X6 WAY RECEPTACLE MAT SEAL	SD-33472-121
		MX150 2X6 WAY RECEPTACLE MAT SEAL W/CLIPSLOT	SD-33472-131
		MX150 2X8 WAY RECEPTACLE MAT SEAL	SD-33472-161
		MX150 2X10 WAY RECEPTACLE MAT SEAL	SD-33472-201
		MX150 HYBRID 16 WAY	SD-33476-161
		MX150 HYBRID 16 WAY W/CLIP SLOT	SD-33476-181

REV	DESCRIPTION
A3	DOCUMENT TYPE CHANGED FROM SD-33611-001 PDD TO SD-33611-001 PSD
A2	NX RE-MASTERING
A	INITIAL RELEASE

SYMBOLS	
A = 0	
E = 0	
B = 0	
S = 0	
= 0	
C = 0	
= 0	
= 0	
V = 0	

THIS DRAWING CONTAINS INFORMATION THAT IS PROPRIETARY TO MOLEX ELECTRONIC TECHNOLOGIES, LLC AND SHOULD NOT BE USED WITHOUT WRITTEN PERMISSION

DIMENSION UNITS	SCALE
mm	10:1

GENERAL TOLERANCES (UNLESS SPECIFIED)		
ANGULAR TOL	±	3.0 °
4 PLACES	±	
3 PLACES	±	
2 PLACES	±	0.1
1 PLACE	±	0.3
0 PLACES	±	

DRAFT WHERE APPLICABLE MUST REMAIN WITHIN DIMENSIONS

CURRENT REV DESC:

EC NO: 620500
DRWN: MSELANGOVAN 2019/07/02
CHK'D: KBORUSZEWSKI 2019/07/11
APPR: MVANSLAMBROU 2019/07/13

INITIAL REVISION:
DRWN: RELEASE 2019/06/26
APPR: MVANSLAMBROU 2019/07/13

molex

1.5MM STANDARD CONNECTOR
CONNECTOR POS. ASSURANCE

PRODUCT CUSTOMER DRAWING

THIRD ANGLE PROJECTION	DRAWING	SERIES	MATERIAL NUMBER	CUSTOMER	SHEET NUMBER
	D-SIZE	33611	SEE BOM	GENERAL MARKET	1 OF 2

DOCUMENT NUMBER	DOC TYPE	DOC PART	REVISION
SD-33611-001	PSD	001	A3

DOCUMENT STATUS	P1	RELEASE DATE	2019/07/13 12:33:05

FORMAT: master-tb-prod-D
REVISION: 11
DATE: 2018/01/16

CPA DETAIL

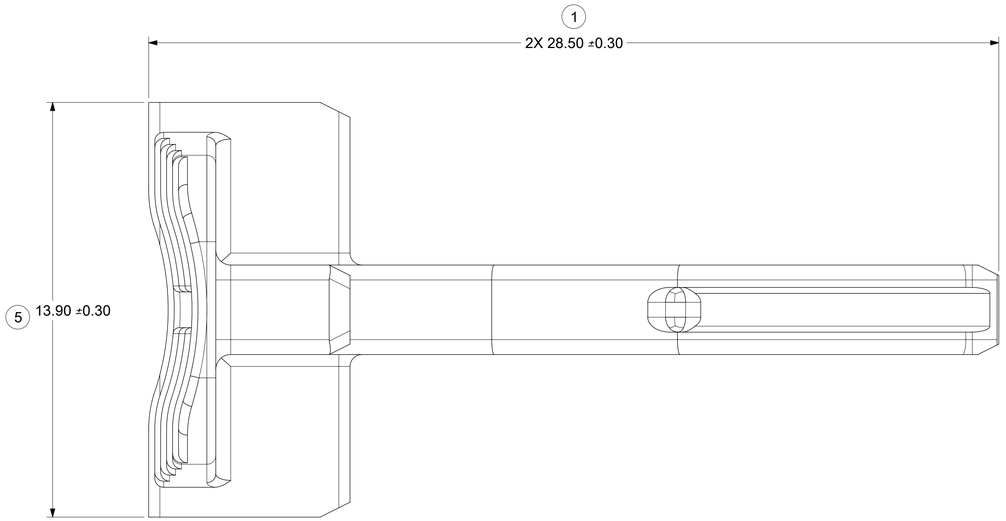

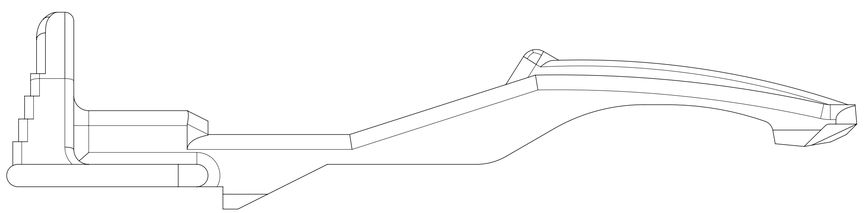

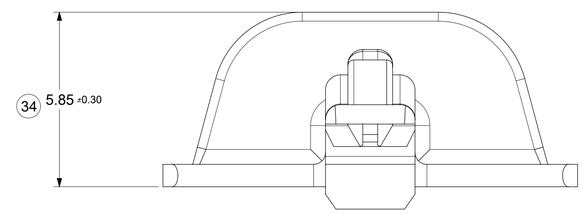

SYMBOLS	
E =	0
E =	0
E =	0
S =	0
=	0
C =	0
=	0
=	0
V =	0

THIS DRAWING CONTAINS INFORMATION THAT IS PROPRIETARY TO MOLEX ELECTRONIC TECHNOLOGIES, LLC AND SHOULD NOT BE USED WITHOUT WRITTEN PERMISSION

DIMENSION UNITS	SCALE
mm	10:1

GENERAL TOLERANCES (UNLESS SPECIFIED)

ANGULAR TOL	±	3.0 °
4 PLACES	±	
3 PLACES	±	
2 PLACES	±	0.1
1 PLACE	±	0.3
0 PLACES	±	

DRAFT WHERE APPLICABLE MUST REMAIN WITHIN DIMENSIONS

CURRENT REV DESC:

EC NO: 620500
DRWN: MSELANGOVAN 2019/07/02
CHK'D: KBORUSZEWSKI 2019/07/11
APPR: MVANSLAMBROU 2019/07/13

INITIAL REVISION:
DRWN: RELEASE 2019/06/26
APPR: MVANSLAMBROU 2019/07/13

THIRD ANGLE PROJECTION | DRAWING: D-SIZE | SERIES: 33611

molex

1.5MM STANDARD CONNECTOR
CONNECTOR POS. ASSURANCE

PRODUCT CUSTOMER DRAWING

DOCUMENT NUMBER	DOC TYPE	DOC PART	REVISION
SD-33611-001	PSD	001	A3

MATERIAL NUMBER	CUSTOMER	SHEET NUMBER
SEE BOM	GENERAL MARKET	2 OF 2

DOCUMENT STATUS	P1	RELEASE DATE	2019/07/13 12:33:05

TEMPLATE: mpdm-fb-prod-v7
REVISION: R
DATE: 2019-04-18