THIS COPY IS PROVIDED ON A RESTRICTED BASIS AND IS NOT TO BE USED IN ANY WAY DETRIMENTAL TO THE INTERESTS OF PANDUIT CORP.

PANDUIT PART NO.	* MATERIAL	PACKAGE QTY.	LENGTH "L"±.02
MT172-C	304 SS.	100	1.72 [43]
MT172-C316	316 SS.	100	1.72 [43]
MT350-C	304 SS.	100	3.50 [89]
MT350-C316	316 SS.	100	3.50 [89]

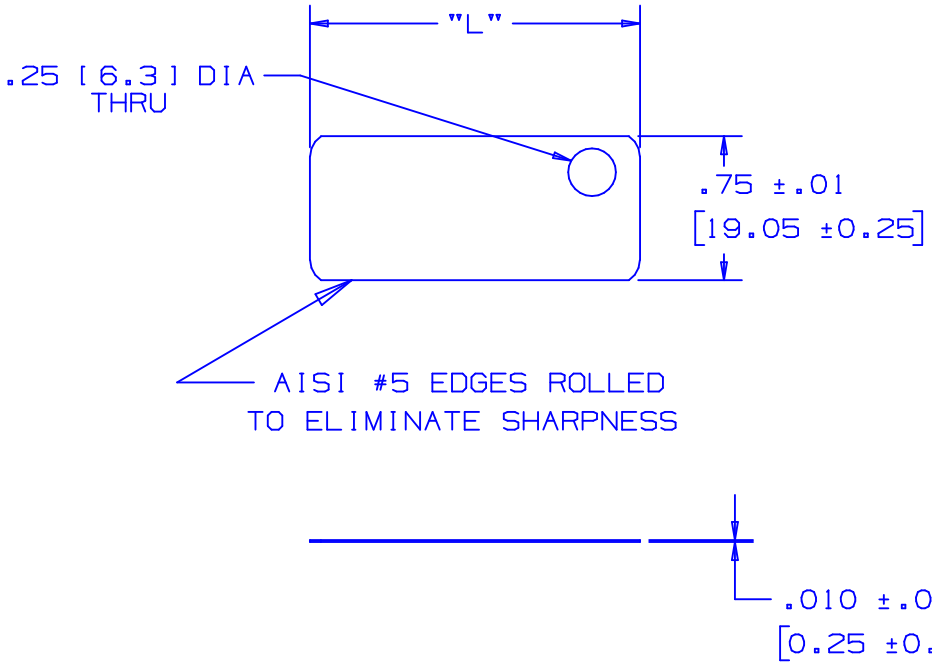

NOTES:

1. DIMENSIONS IN [ ] ARE mm.
2. CUSTOM PERMANENT MARKING AVAILABLE. CONSULT FACTORY.
3. TOLERANCES:
   .XXX= ±.010[.25] .XX= ±.02[.5]
   .X= ±.03[.8] ANGLES= ±2°

S41064_02

REV	DATE	BY	CHK	DESCRIPTION	ECN #	PM	CUST
02	5/02	JAMB		MAT'L.FOR PART NO. MT172-C & MT350-C WAS 302 S.S.			
01	1/01	KMD	JAC	MT172-C316 WAS MT172-316C MT350-C316 WAS MT350-316C FILE SPEC WAS NPC_S41064_00	09062	CCH	JAC
00	11/91	SM	JAC	RELEASED	00679	GJP	LA

PANDUIT CORP. TINLEY PARK, ILLINOIS

METAL TAGS - 1 HOLE

UNLESS OTHERWISE SPECIFIED, DIMENSIONAL TOLERANCES ARE:
(.X) ± - - - (.XXX) ± - - -
(.XX) ± - - - ANGLES ± - - -

UNLESS OTHERWISE SPECIFIED, ALL DIMENSIONS ARE GIVEN IN INCHES. THIRD ANGLE PROJECTION.

DRAWN BY SAM
DATE 11/11/91
CHK'D JAC

MAT'L: * STAINLESS STEEL

SCALE FULL
DRAWING NO. S41064
DWG SIZE A