HK Time Totalizer

Totalizes running time of electrically operated equipment... synchronous motor driven models for display of hours, minutes, or seconds

RECOGNIZED CERTIFIED

The HK5 series totalizes the "ON" or running time of electrically operated equipment. Its features include:

- Large, easy to read digits
- Dust proof dial cover
- Maintenance free
- High impact plastic case
- Can be mounted in any position

OPERATION

The Eagle Signal brand HK5 series time totalizer has a synchronous motor which drives a set of digit readout wheels to indicate the total time the unit is energized. Six digit-wheels, including a 1/10 digit on hours and minutes, provide a fine, wide range of time measurement. The HK5 features a front mounted reset wheel. It can be reset to zero at any time during its operation.

SPECIFICATIONS

Time Ranges:
Non-Reset

Sym.	Time Range
HK400	99999.9 Min.
HK410	99999.9 Hr.
HK420	999999 Sec.

Reset

Sym.	Time Range
HK500	9999.9 Min.
HK510	9999.9 Hr.
HK520	99999 Sec.

Voltage/Frequency: 120V (+10, -15%), 50/60 Hz
240V (+10, -15%), 50/60 Hz

Burden: 3W max.

Temperature Range: 0˚ to 140˚F (-17˚ to +60˚C)

Agency Approvals: UL Recognition E59290
CSA Certification LR27967

MOUNTING

Requires 2 3/8 diameter panel cutout for mounting. 1/2 maximum mounting panel thickness.

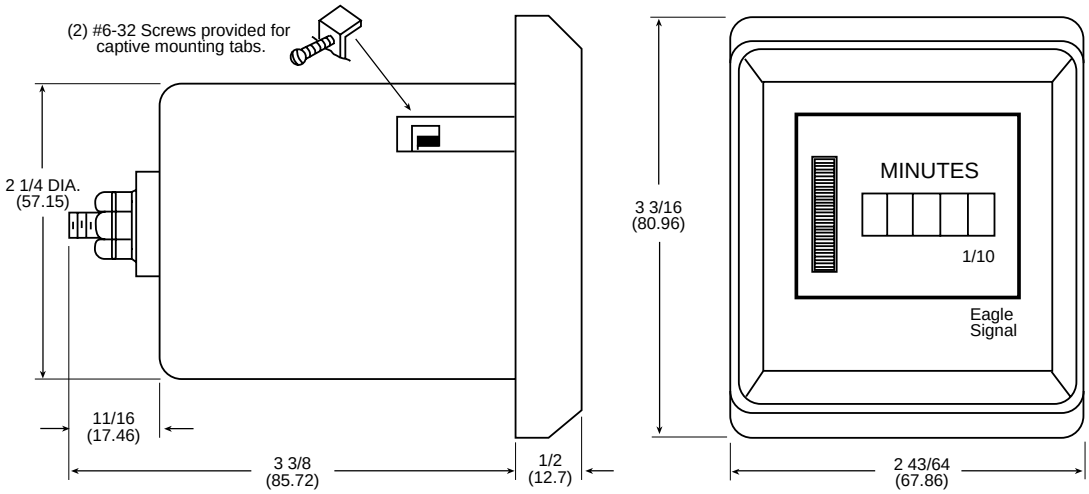

CAUTION: When resetting the HK5 unit, adjust odometer to position 00000 at top of window, as shown.

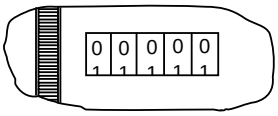

Typcial Applications:

- Electronic Equipment
- Computers and Office Machines
- Machine Tool Lubrication
- Maintenance Programs
- Industrial Ovens
- Electrical Equipment Rental
- Industrial Cost Analysis
- Nuclear Control Systems
- Recording Machine Down Time
- Radio Transmitters

ENCLOSURES

Model No.	Description
1701-0673	Surface Mounting Box NEMA 1

ACCESSORIES

Model No.	Description
HK500-07	Key Lock Cover

ORDERING INFORMATION

Consult Customer Service for availability of other voltages and frequencies.

HK 4 20 A6

Sym.	Description
4*	Non-Reset
5	Reset

*HK420 not available in A5 or B5 versions.

Sym.	Description
00	Minutes
10	Hours
20	Seconds

Sym.	Description
A5	120V, 50 Hz
A6	120V, 60 Hz
B5	240V, 50 Hz
B6	240V, 60 Hz