THIS COPY IS PROVIDED ON A RESTRICTED BASIS AND IS NOT TO BE USED IN ANY WAY DETRIMENTAL TO THE INTERESTS OF PANDUIT CORP.

NO WARRANTY, EXPRESSED OR IMPLIED, IS MADE BY PANDUIT WITH RESPECT TO ADHESIVE BOND PERFORMANCE. AMONG OTHER THINGS, THE CONDITIONS UNDER WHICH THESE MOUNTS MAY BE APPLIED AND/OR THE SURFACE TO WHICH THEY MAY BE APPLIED ARE BEYOND PANDUIT'S CONTROL.

PANDUIT * PART NO.	USE WITH THESE CABLE TIE ** CROSS SECTIONS	WEIGHT lbs (g) /100 pcs.
ABM4H-A OR ABM50	M, I, S, LH & H	1.08 (492)

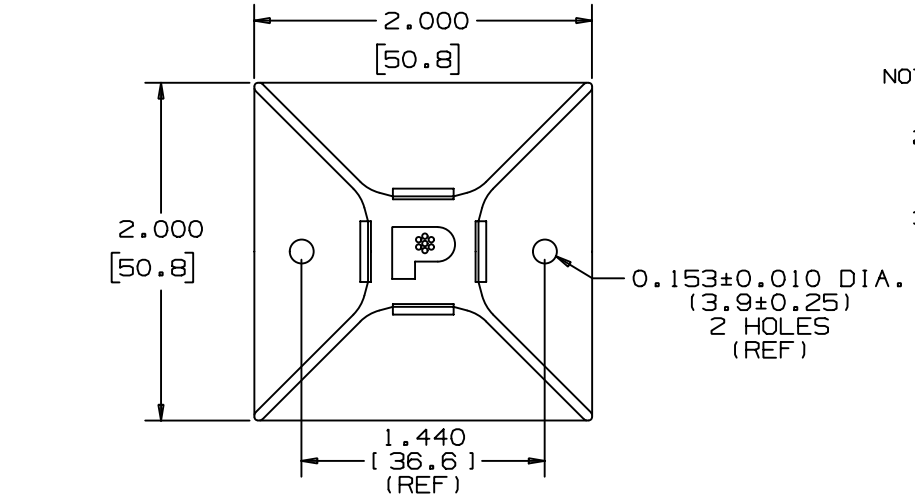

NOTES:
1) SEE CURRENT PRICE SHEET FOR PART NUMBER SUFFIX DESIGNATIONS FOR PACKAGE SIZE.
2) CABLE TIE CROSS SECTION CODE: M=MINIATURE, I=INTERMEDIATE,S=STANDARD,LH=LIGHT HEAVY,H=HEAVY. MOUNT SHOULD NOT BE USED WITH M,I OR S CROSS SECTION CABLE TIES WITH LESS THAN A 2" BUNDLE DIAMETER.
3) MOUNT HAS CONTINOUS OPERATING TEMPERATURE OF 120°F (49°C).

TO APPLY MOUNT

1) REMOVE MOUNT FROM PROTECTIVE LINER.
2) PLACE IN DESIRED LOCATION.
3) APPLY PRESSURE TO MOUNT.

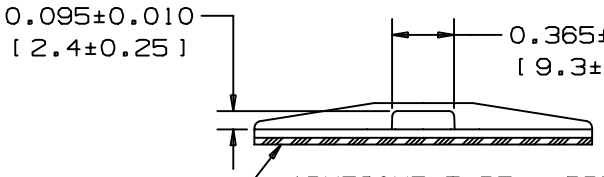

ADHESIVE TAPE: PRESSURE SENSITIVE FOAM 0.040(1.01) THICK WITH PROTECTIVE LINER. MOUNT IS DESIGNED TO SUPPORT 2.0 lbs.(907g) MAX. WEIGHT ON A CLEAN, DRY, SMOOTH, GREASE-FREE SURFACE

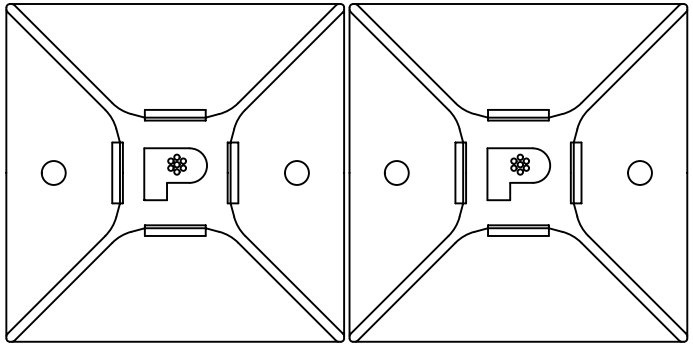

(DIMENSIONS IN PARENTHESES ARE IN METRIC.)

CAD FILENAME/LAYERS: G00239DQ_PB_ABM4HA_03

PANDUIT CORP. TINLEY PARK, ILLINOIS

ABM4H-A AND ABM50
ADHESIVE BACKED MOUNT

REV	DATE	BY	CHK	DESCRIPTION	ECN	-	R	CUST	SUP
3	12-1-00	CGSM		ADDED NEW PART# ABM50 FOR JAPAN PARTS	GB0239DQ		3		
2	10-30-00	CGSM		REMOVED DIM, CHANGED DIMENSIONS TO REF, EDITED NOTES, ADDED NOTE 3	GB0239DQ		2		
1	9-15-00	CGSM		CHANGED HOLE SIZE DIMENSION	GB0239DQ		1		
R	8-29-96	CJG		INITIAL RELEASE	GB0239DQ		R		

UNLESS OTHERWISE SPECIFIED, DIMENSIONAL TOLERANCES ARE:
(.X) ±0.1(2.5) (.XXX) ± 0.020(.5)
(.XX) ±0.05(1.3) ANGLES ± 5°

UNLESS OTHERWISE SPECIFIED, ALL DIMENSIONS ARE GIVEN IN INCHES, THIRD ANGLE PROJECTION.

DRAWN BY: CJG
DATE: 8-29-96
CHK'D:
MAT'L: WHITE NYLON 6/6
SCALE: FULL
DRAWING NO.: GB0239DQ
DWG SIZE: A