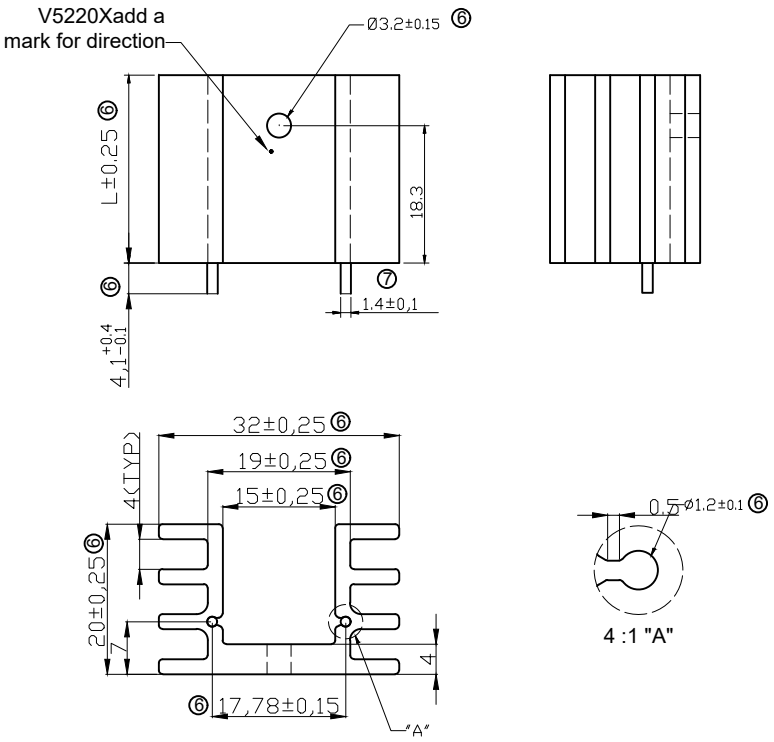

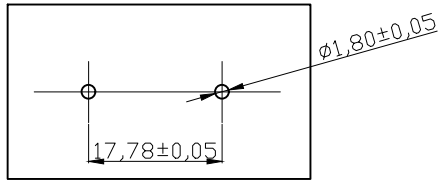

④ Recommended PCB Layout

Material: AL6063-T5
Finished: Black anodized

⑥

Option	L	Thermal resistance(K/W)
V5220W	25	10.8
V5220X	37.5	8.6
V5220Y	50	7.2

RoHS compliant

Unit:mm

Scale	Free
⑤ TOLERANCE	
0-6	±0.15
6-30	±0.20
30-120	±0.30
120-400	±0.50
DIM	TOL
Angle	±1°

Id.	Modification	Date	Name
⑦	Update of typo	24.07.2024	Segal
⑥	Update the tolerance, thermal resistance and add the thermal graph on page 2	18.01.2020	Segal
⑤	Update the tolerance	04.04.2019	Amy
④	Add PCB layout information	24.02.2014	Amy
③	Modify drawing layout	10.03.2010	Alex
②	Update	11.08.2009	Dean

	Date	Name
Drawn	19.03.2002	Hellwig
Approved	24.07.2024	Segal

ASSMANN WSW components
A company of BCS

Description: Extrusion Heat Sink, 32x20mm, Black anodized with solder pins

ASSMANN WSW-No. V5220x

Drawing-No. ASS 0498 HS

rev07

Customer-No.

SHEET 1 / 2

⑥

V5220W

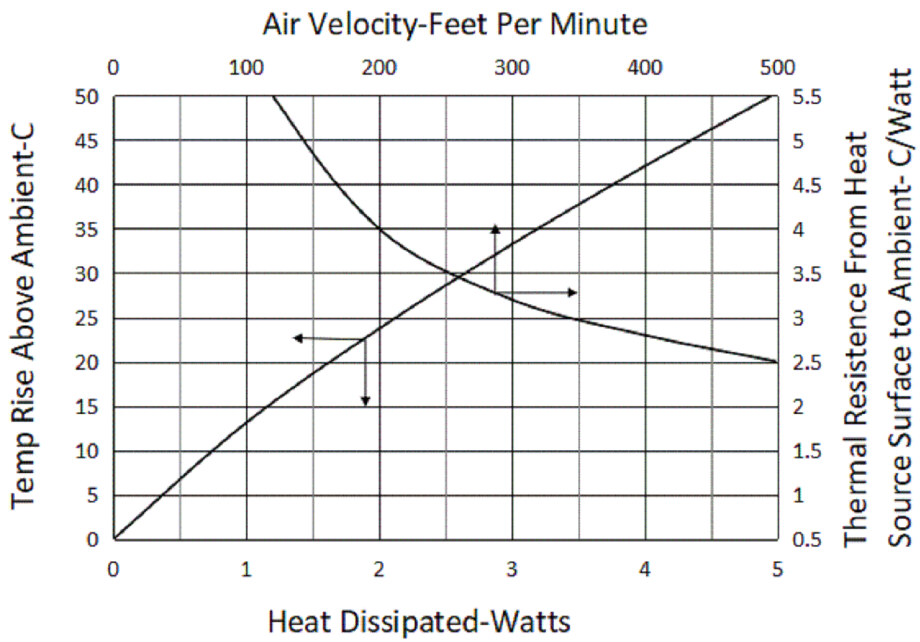

Thermal Power (W)	Temp Rise (℃)
0	0
1	13.1
2	23.7
3	33.2
4	42
5	50.3
Note: Natural convection cooling	

Air Velocity (Feet/Minute)	Thermal Resistance(℃/W)
100	5.9
200	4
300	3.2
400	2.8
500	2.5

RoHS compliant

Unit:mm

Scale	Free
⑤ TOLERANCE	
0-6	±0.15
6-30	±0.20
30-120	±0.30
120-400	±0.50
DIM	TOL
Angle	±1°

Id.	Modification	Date	Name
⑦	Update of typo	24.07.2024	Segal
⑥	Update the tolerance, thermal resistance and add the thermal graph on page 2	18.01.2020	Segal
⑤	Update the tolerance	04.04.2019	Amy
④	Add PCB layout information	24.02.2014	Amy
③	Modify drawing layout	10.03.2010	Alex
②	Update	11.08.2009	Dean

	Date	Name
Drawn	19.03.2002	Hellwig
Approved	24.07.2024	Segal

ASSMANN WSW components
A company of BCS

Description: Extrusion Heat Sink, 32x20mm, Black anodized with solder pins

ASSMANN WSW-No. V5220x

Drawing-No. ASS 0498 HS

rev07

Customer-No.

SHEET 2 / 2