THIS DRAWING IS UNPUBLISHED. RELEASED FOR PUBLICATION - -, .
© COPYRIGHT - BY TYCO ELECTRONICS CORPORATION. ALL INTERNATIONAL RIGHTS RESERVED.

LOC	DIST
GP	00

REVISIONS

P	LTR	DESCRIPTION	DATE	DWN	APVD
	C	REVISED PER ECO-07-000077	14FEB07	CJV	SB
	C1	REVISED PER ECO-10-000443	18JAN10	KK	HMR

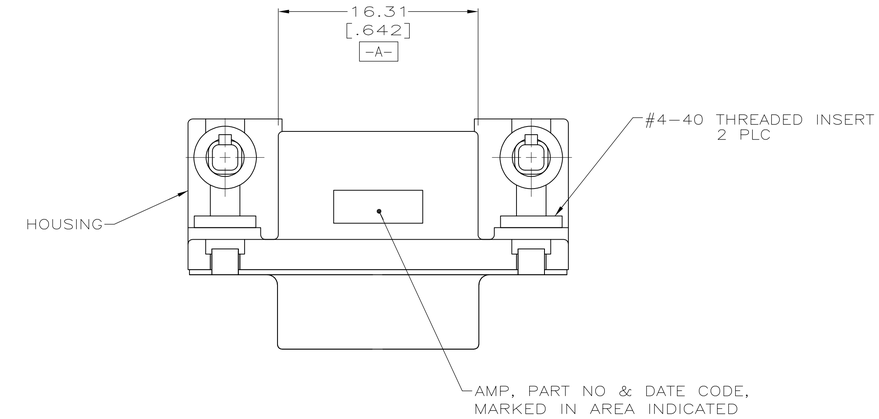

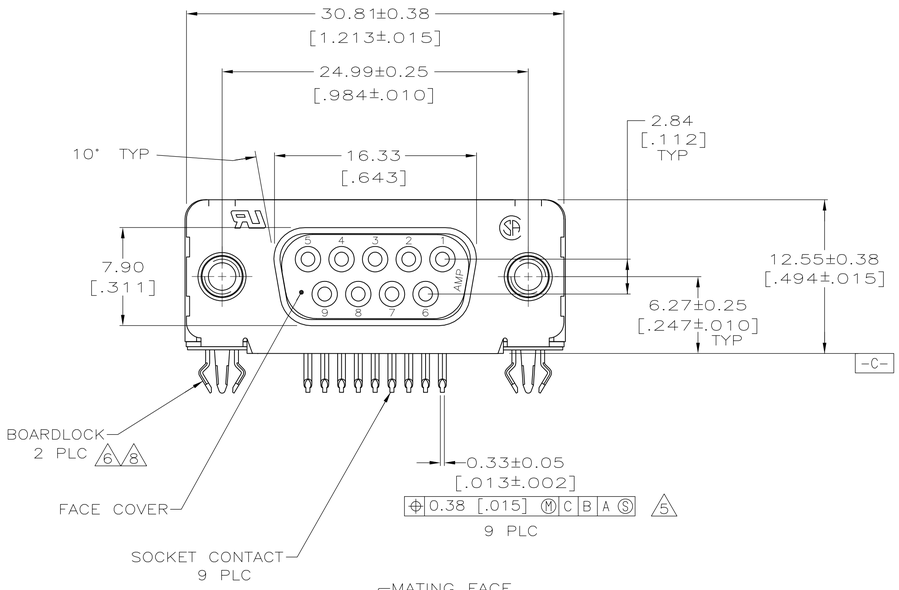

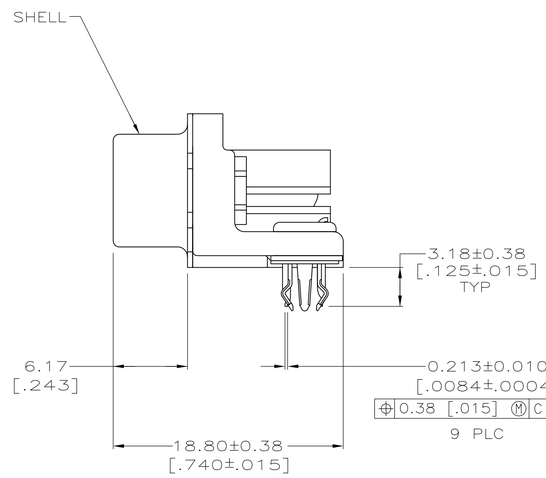

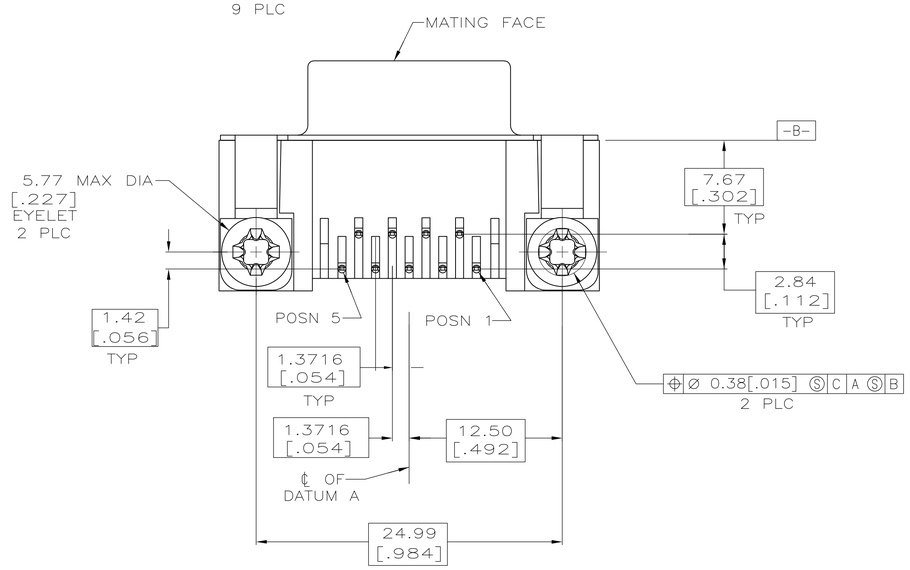

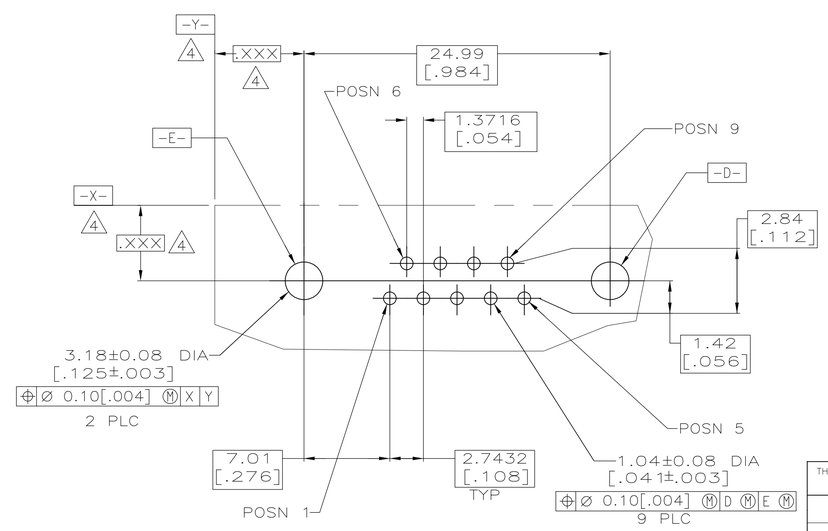

RECOMMENDED PC BOARD LAYOUT

1.57 [.062] PC BOARD THICKNESS

1. HOUSING & FACE COVER: NYLON, THERMOPLASTIC, UL 94V0 RATED, BLACK; SHELL: CARBON STEEL PER ASTM A109; SOCKET CONTACTS: PHOSPHOR BRONZE PER QQ-B-750; EYELETS: BRASS; THREADED INSERTS: ZINC; BOARDLOCKS: COPPER ALLOY.

2. SOCKET CONTACTS: GOLD PLATED FOR A LENGTH OF 1.27 [.050] MIN FROM MATING END, 0.76µm [.000030] MIN GOLD IN MATED AREA, 2.54µm[.000100] MIN TIN OR TIN-LEAD FOR A LENGTH OF 3.56[.140] MIN FROM OPPOSITE END, BOTH OVER 1.27µm[.000050] MIN NICKEL.
EYELETS: 2.54µm [.000100] MIN TIN-LEAD OR TIN OVER COPPER FLASH.
SHELL: 2.54µm [.000100] MIN TIN OVER 1.27µm [.000050] MIN COPPER.
THREADED INSERTS: CLEAR CHROMATE.
BOARDLOCKS: 3.81µm [.000150] MIN TIN-LEAD OVER 1.27µm [.000050] MIN NICKEL.

3. SOCKET CONTACTS: GOLD PLATED FOR A LENGTH OF 1.27 [.050] MIN FROM MATING END, GOLD FLASH IN MATED AREA, 2.54µm[.000100] MIN TIN OR TIN-LEAD FOR A LENGTH OF 3.56[.140] MIN FROM OPPOSITE END, BOTH OVER 1.27µm[.000050] MIN NICKEL.
EYELETS: 2.54µm [.000100] MIN TIN-LEAD OR TIN OVER COPPER FLASH.
SHELL: 2.54µm [.000100] MIN TIN OVER 1.27µm [.000050] MIN COPPER.
THREADED INSERTS: CLEAR CHROMATE.
BOARDLOCKS: 3.81µm [.000150] MIN TIN OVER 1.27µm [.000050] MIN NICKEL.

4. DATUMS AND BASIC DIMENSIONS ESTABLISHED BY CUSTOMER.

5. POSITION TOLERANCE APPLIES AT CONTACT TIP.

6. BOARDLOCKS WILL ACCEPT .062 MAX PRINTED CIRCUIT BOARD THICKNESS.

7. COMPATIBLE WITH TYPICAL HIGH TEMPERATURE SOLDERING APPLICATIONS TO A MAXIMUM OF 225°C FOR A MAXIMUM DURATION OF 90 SECONDS. TEMPERATURE TO BE MEASURED ON CONNECTOR SURFACE.

8. 788796-4 DOES NOT HAVE BOARDLOCKS.

9. SOCKET CONTACTS: GOLD PLATED FOR A LENGTH OF 1.27 [.050] MIN FROM MATING END, 0.76µm [.000030] MIN GOLD IN MATED AREA, 2.54µm[.000100] MIN TIN OR TIN-LEAD FOR A LENGTH OF 3.56[.140] MIN FROM OPPOSITE END, BOTH OVER 1.27µm[.000050] MIN NICKEL.
EYELETS: 2.54µm [.000100] MIN TIN-LEAD OR TIN OVER COPPER FLASH.
SHELL: 2.54µm [.000100] MIN TIN OVER 1.27µm [.000050] MIN COPPER.
THREADED INSERTS: CLEAR CHROMATE.
BOARDLOCKS: 3.81µm [.000150] MIN TIN OVER 1.27µm [.000050] MIN NICKEL.

10. SOCKET CONTACTS: GOLD PLATED FOR A LENGTH OF 1.27 [.050] MIN FROM MATING END, GOLD FLASH IN MATED AREA, 2.54µm[.000100] MIN TIN OR TIN-LEAD FOR A LENGTH OF 3.56[.140] MIN FROM OPPOSITE END, BOTH OVER 1.27µm[.000050] MIN NICKEL.
EYELETS: 2.54µm [.000100] MIN TIN-LEAD OR TIN OVER COPPER FLASH.
SHELL: 2.54µm [.000100] MIN TIN OVER 1.27µm [.000050] MIN COPPER.
THREADED INSERTS: CLEAR CHROMATE.
BOARDLOCKS: 3.81µm [.000150] MIN TIN OVER 1.27µm [.000050] MIN NICKEL.

11. OBSOLETE PARTS: OBSOLETE CIS STREAMLINING PER D.RENAUD/D.SINISI

	PACKAGING	FINISH	PART NO
	TRAYS	10	6-788796-8
	TRAYS	9	6-788796-7
11 8 OBSOLETE	TRAYS	3	~~788796-4~~
	TUBES	2	788796-3
OBSOLETE	TRAYS	3	788796-2
	TRAYS	2	788796-1

THIS DRAWING IS A CONTROLLED DOCUMENT.

DIMENSIONS: mm [INCHES]

TOLERANCES UNLESS OTHERWISE SPECIFIED:
0 PLC ± -
1 PLC ± -
2 PLC ± 0.13 [.005]
3 PLC ± -
4 PLC ± -
ANGLES ± -

MATERIAL 1

FINISH SEE TABLE

DWN D.BROCKWAY 01 MAR 00
CHK J.KOPPENHEFFER 03 MAR 00
APVD J.KOPPENHEFFER 03 MAR 00

PRODUCT SPEC 108-40025
APPLICATION SPEC 114-40010
WEIGHT -

Tyco Electronics
Tyco Electronics Corporation
Harrisburg, PA 17105-3608

NAME RCPT ASSEMBLY, SIZE 1, .318 SERIES, WITH FRONT METAL SHELL, HIGH TEMPERATURE, AMPLIMITE™ HD-20

SIZE	CAGE CODE	DRAWING NO	RESTRICTED TO
A1	00779	C-788796	-

CUSTOMER DRAWING SCALE 4:1 SHEET 1 OF 1 REV C1

4805 (1/08)