PART NAME	NBF SERIES PLASTIC NEMA BOX	PART No.	NBF-32010 & NBF-32110 & NBF-32210 & NBF-32310 & NBF-32410	REVISION DATE	9/1/2010

MATERIAL	FLAMMABILITY RATING	CONTINUOUS OPERATING TEMP.
ABS	UL94-HB	-40°C ~ +60°C / -40°F ~ 140°F
CLEAR PC	UL94-V0 UV STABLILIZED	-40°C ~ +130°C / -40°F ~ 266°F
ABS / PC BLEND	UL94-5VA	-40°C ~ +85°C / -40°F ~ 185°F
PBT / PC BLEND	UL94-5VA + UV (f1)	-40°C ~ +75°C / -40°F ~ 167°F

FINISH:
BODY_____ LIGHT GRAY
COVER_____ LIGHT GRAY OR CLEAR
LATCHES & HINGES_____ PLASTIC
WALL MOUNTING BRACKETS__ STAINLESS STEEL
& HARDWARE

BODY

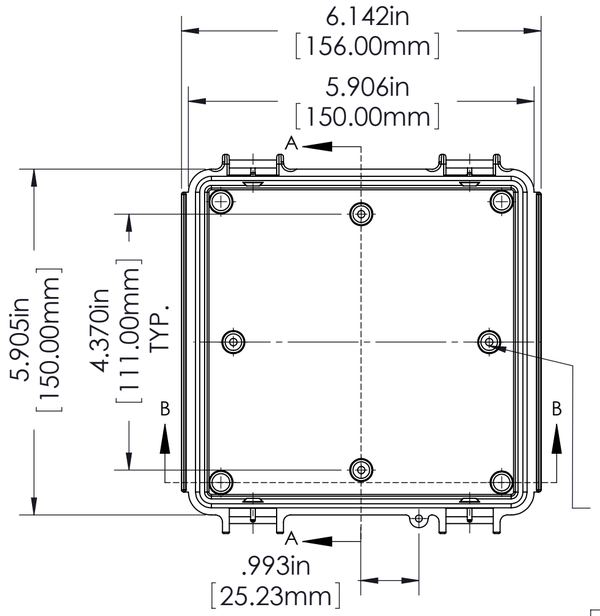

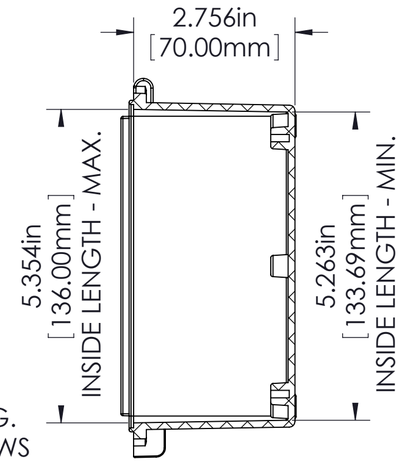

SECTION A-A

∅.126in
[3.20mm]
FOR M4 x 10mm LG.
SELF-TAPPING SCREWS
4 PLCS.
(ABS VERSIONS ONLY)

M4 THREADED INSERTS
ON ALL OTHER VERSIONS
USE M4 x 8mm LG.
MACHINE SCREWS.
2 PLCS.

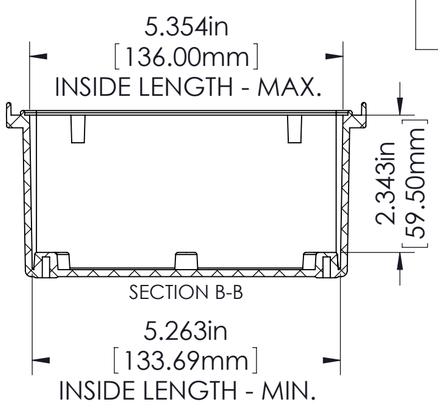

SECTION B-B

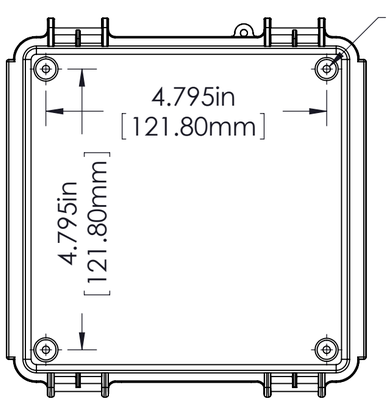

∅.126in
[3.20mm]
FOR M4 x 10mm LG.
SELF-TAPPING SCREWS
4 PLCS.

ASSEMBLY

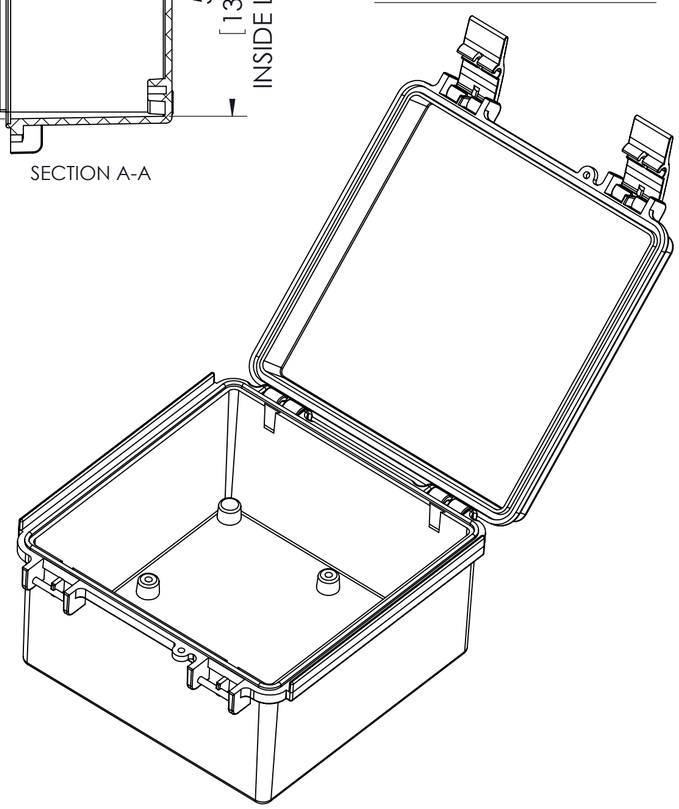

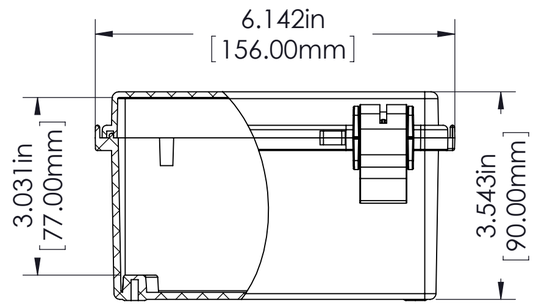

COVER

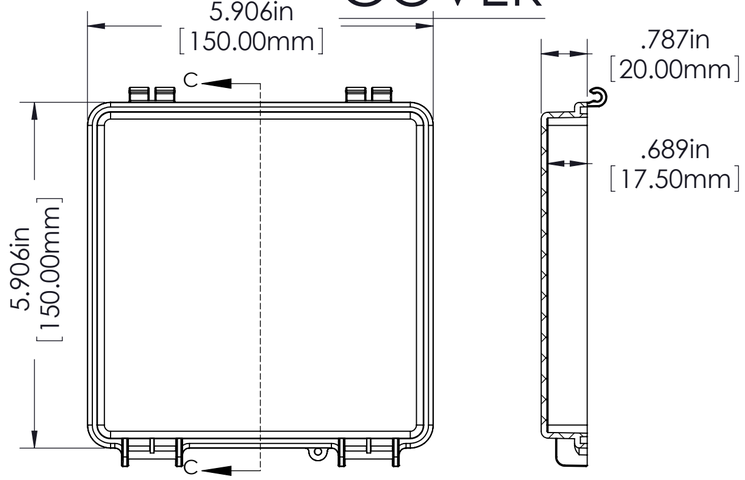

SECTION C-C

NOTES:

1) UNIT COMES COMPLETE WITH: (4) WALL MOUNTING BRACKETS & (4) M4 x 10mm LG. SELF-TAPPING SCREWS. (NOT SHOWN)

2) BOXES DESIGNED TO MEET FOLLOWING STANDARDS: NEMA 1,2,4,4X, AND IEC529-IP65 REQUIREMENTS.

TOLERANCES:

ALL DIMENSIONS HAVE
±0.039in [±1mm] TOLERANCE
UNLESS OTHERWISE SPECIFIED.

PART NO.	MATERIAL		USE
	BODY	COVER	
NBF-32010	ABS	ABS	INDOOR
NBF-32110	ABS / PC	ABS / PC	INDOOR
NBF-32210	ABS / PC	CLEAR PC	INDOOR
NBF-32310	PBT / PC	PBT / PC	OUTDOOR
NBF-32410	PBT / PC	CLEAR PC	OUTDOOR