Copyright FCI.

FCIconnect.com

| PRODUCT NUMBER |
|---|
| 20020008-XXXXXXXLF |

# 20020008- □ □ □ □ □ □ □ L F

LF: DENOTED RoHS COMPATIBLE

1 : STANDARD PRODUCT W/ BOX PACKING

PITCH

C: 3.50 mm
D: 3.81 mm
G: 5.00 mm
H: 5.08 mm

POLES

02: 2 POLES
03: 3 POLES
04: 4 POLES
|
|
|
24: 24 POLES

| PRINTING CODE | POSITION | MARKING |
|---|---|---|
| 0 | NONE | NONE |
| 3 | SIDE | ....4,3,2,1 |
| 5 | SIDE | ....C,B,A,-,+ |

HOUSING CODE

| CODE | COLOR | AVAILABILTY |
|---|---|---|
| 1 | GREEN(RAL 6018/T) | STANDARD |
| 2 | BLACK | ON REQUEST ONLY |
| 3 | GREY(RAL 7004/P) | ON REQUEST ONLY |
| 4 | BLUE(RAL 5015/A) | ON REQUEST ONLY |
| 5 | YELLOW | ON REQUEST ONLY |

SCREW CODE

| CODE | SCREW TYPE | | AVAILABILTY |
|---|---|---|---|
| A | -/+ | | ON REQUEST ONLY |
| B | - | | STANDARD |

PROPERTY TABLE

| | | | | | |
|---|---|---|---|---|---|
| FCI SERIES NAME | | 02-350 | 02-381 | 02-500 | 02-508 |
| PITCH (mm) | | 3.50 | 3.81 | 5.00 | 5.08 |
| VOLTAGE RATING (VAC) | | 300 | 300 | 300 | 300 |
| CURRENT RATING (A) | cULus | 8 | 8 | 12 | 12 |
| | VDE | 10 | 10 | NA | NA |
| APPLICABLE WIRE RANGE (AWG) | 1-WIRE | 16~28 | 16~28 | 12~24 | 12~24 |
| | 2-WIRE | 20 | 20 | 18 | 18 |
| WIRE CROSS SECTION ($mm^2$) | SOLID 1-WIRE | 1.5 | 1.5 | 2.5 | 2.5 |
| | SOLID 2-WIRE | 0.5 | 0.5 | 1.0 | 1.0 |
| | STRANDED 1-WIRE | 1.5 | 1.5 | 2.5 | 2.5 |
| | STRANDED 2-WIRE | 0.75 | 0.75 | 1.5 | 1.5 |
| OPENING CONTACT HOUSING($mm^2$) | | 2.8x1.7 | 2.8x1.7 | 2.6x3.2 | 2.6x3.2 |
| WIRE STRIP LENGTH(mm) | | 6~7 | 6~7 | 6~7 | 6~7 |
| TORQUE +/-10% (N-m/Lb-in) | | 0.19/1.7 | 0.19/1.7 | 0.4/3.5 | 0.4/3.5 |
| SCREW | | M2x0.4 | M2x0.4 | M3x0.5 | M3x0.5 |
| WITHSTANDING VOLTAGE (kV) | cULus | 1.6 | 1.6 | 1.6 | 1.6 |
| | VDE | 2.5 | 2.5 | NA | NA |
| OPERATING TEMP. (℃) | | -40~+115 | -40~+115 | -40~+115 | -40~+115 |
| POLES AVAILABLE | | 02~24 | 02~24 | 02~24 | 02~24 |
| SAFETY CERTIFICATE | | cULus VDE | | cULus | |

NOTES:
1. MATERIALS
   1-1 HOUSING: THERMALPLASTIC RESIN, UL 94V-0 RATED,
   1-2 SCREW: STEEL, ZINC PLATED.
   1-3 CLAMP: COPPER ALLOY, NICKEL PLATED.
   1-4 TERMINAL: COPPER ALLOY, TIN PLATED.
2. PRODUCT SPECIFICATION REFER TO FCI GS-12-625.
3. PRODUCT PACKING SPECIFICATION REFER TO FCI GS-14-1394.
4. FCI, SAFETY CERTIFICATE LOGO AND SERIES NAME TO BE SHOWN ON PRODUCT SURFACE.
5. THE PRODUCTS WHERE THE PART NUMBER END IN "LF" MEET THE EUROPEAN UNION DIRECTIVE AND OTHER COUNTRY REGULATIONS AS DESCRIBED IN GS-22-008.

| mat'l. code | surface ASME Y14.5 | tolerance ASME Y14.5 | projection | product family: TERMINAL BLOCK |
|---|---|---|---|---|

| ltr | ecn no | dr | date |
|---|---|---|---|
| D | T10-0042 | WL | 030310 |
| E | T10-0082 | WL | 080510 |
| F | T10-0172 | WL | 102010 |
| G | T11-0013 | WL | 040811 |
| H | T-004746 | WL | 072011 |
| J | T-012872 | LS | 091912 |

tolerances unless otherwise specified
angles X°±1°
linear X.±0.5[.020] X.X±0.3[.012] X.XX±0.1[.004]
MM [INCH]
scale

| | | |
|---|---|---|
| dr | BEER FU | 062509 |
| engr | BEER FU | 062509 |
| chr | GARY HSIEH | 062509 |
| appd | JOSEPH HSIA | 062509 |

title: TERMINAL BLOCK
Pluggable plug, hook entry side

dwg no 20020008 | sheet 1 of 5 | size A4

type: CUSTOMER Drawing

| sheet index | 1 | 2 | 3 | 4 | 5 |
|---|---|---|---|---|---|
| revision | J | J | J | J | J |

form: A4mmXLc

PDS: Rev :J STATUS:Released Printed: Sep 19, 2012

Copyright FCI.

FCIconnect.com

| PRODUCT NUMBER | SERIES NAME | PITCH |
|---|---|---|
| 20020008-CXXXXXXLF | 02-350 | 3.50 mm |

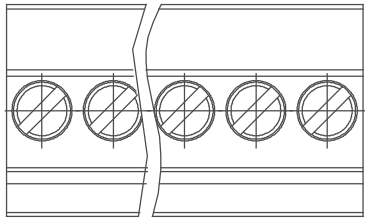

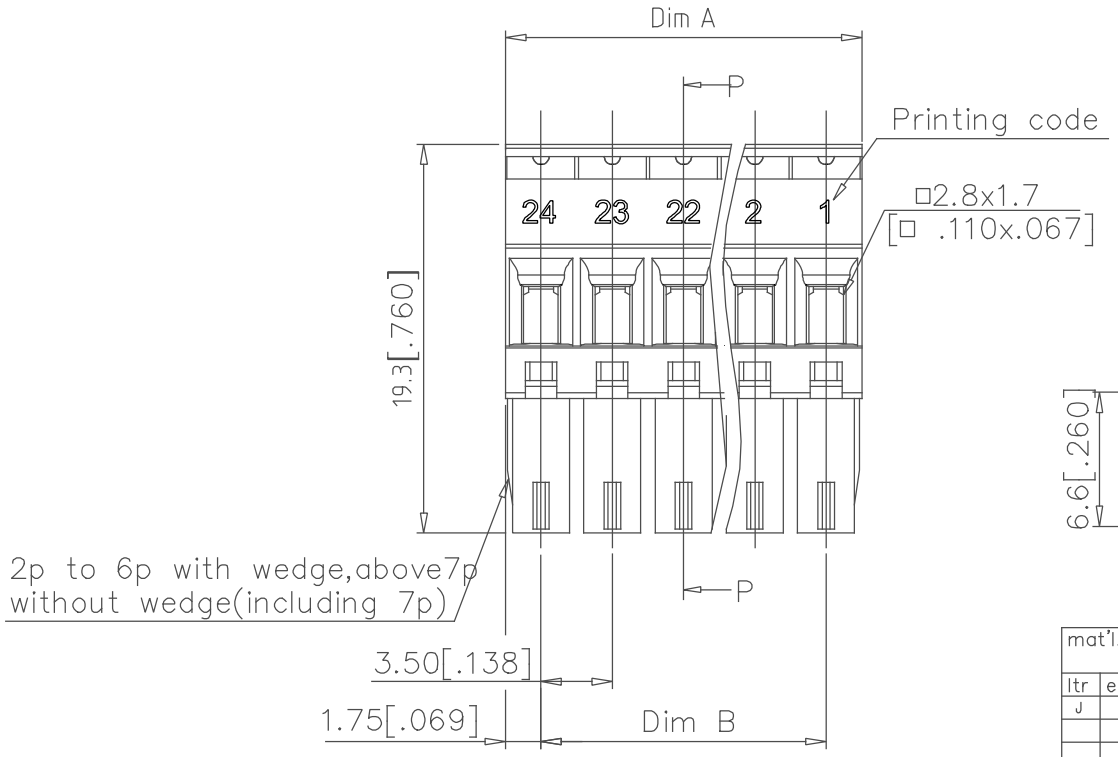


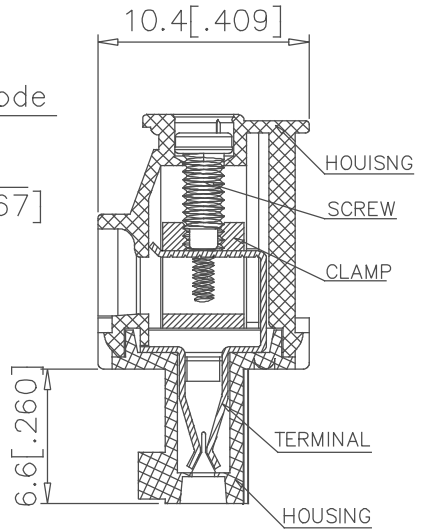


SECTION P-P

N= NUMBER OF POLES
DIMENSION

| | |
|---|---|
| Dim A | N*3.5[.138] |
| Bim B | (N-1)X3.5[.138] |

| Poles | Tolerance |
|---|---|
| 2P-6P | ±0.15[.006] |
| 7P-12P | ±0.20[.008] |
| 13P-18P | ±0.25[.010] |
| 19P-24P | ±0.30[.012] |

| | | |

Copyright FCI.

FCIconnect.com

| PRODUCT NUMBER | SERIES NAME | PITCH |
|---|---|---|
| 20020008-DXXXXXXLF | 02-381 | 3.81 mm |

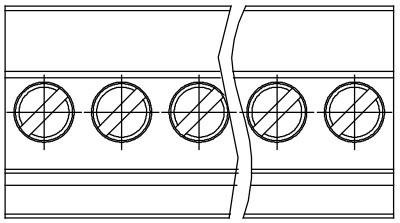

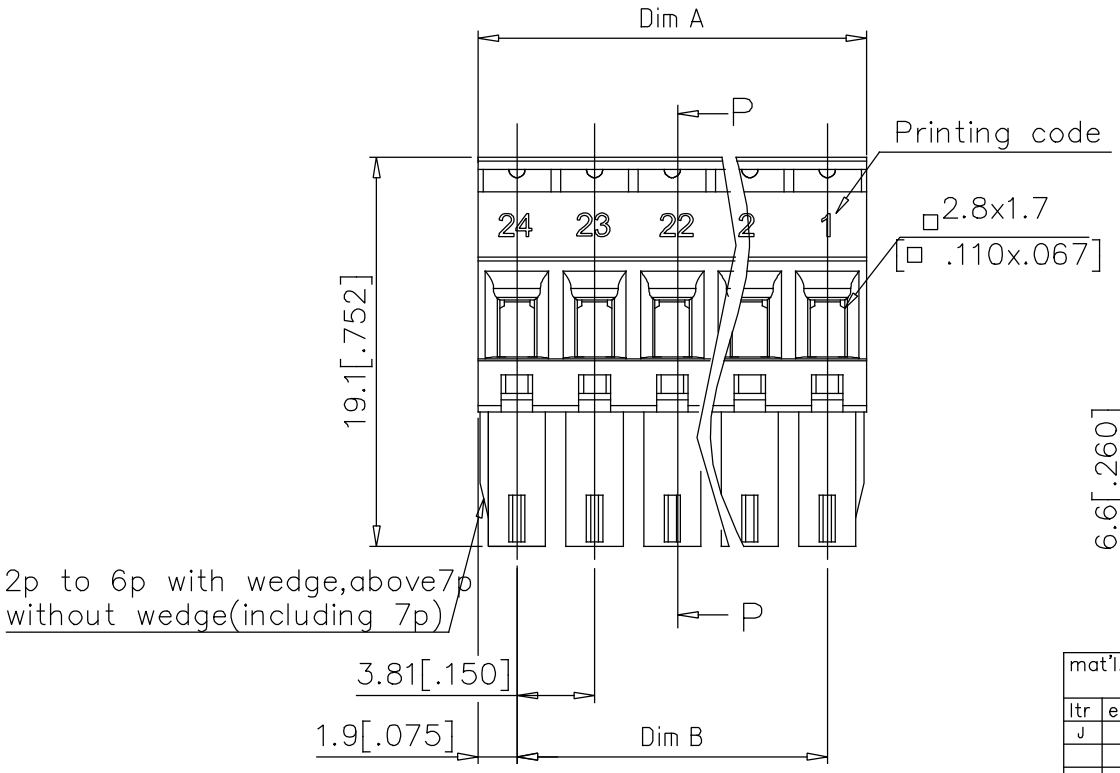


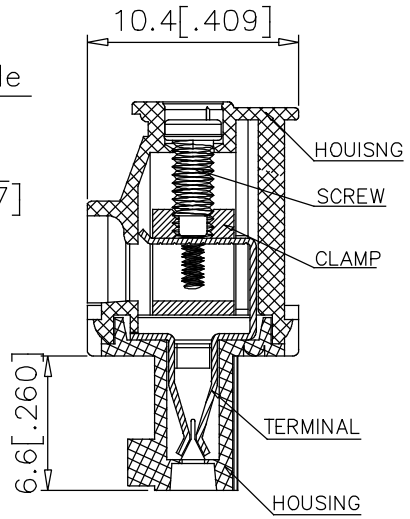


SECTION P-P

N= NUMBER OF POLES
DIMENSION

| | |
|---|---|
| Dim A | N*3.81[.150] |
| Bim B | (N-1)X3.81[.150] |

| Poles | Tolerance |
|---|---|
| 2P-6P | ±0.15[.006] |
| 7P-12P | ±0.20[.008] |
| 13P-18P | ±0.25[.010] |
| 19P-24P | ±0.30[.012] |

| | | |

Copyright FCI.

FCIconnect.com

| PRODUCT NUMBER | SERIES NAME | PITCH |
|---|---|---|
| 20020008-GXXXXXXLF | 02-500 | 5.00 mm |

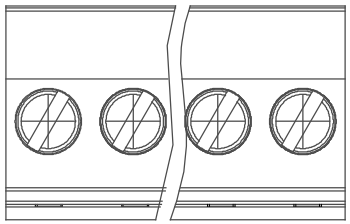

N= NUMBER OF POLES
DIMENSION

| | |
|---|---|
| Dim A | Nx5.0[.197] |
| Bim B | (N-1)x5.0[.197] |

| Poles | Tolerance |
|---|---|
| 2P-6P | ±0.15[.006] |
| 7P-12P | ±0.25[.010] |
| 13P-18P | ±0.30[.012] |
| 19P-24P | ±0.40[.016] |

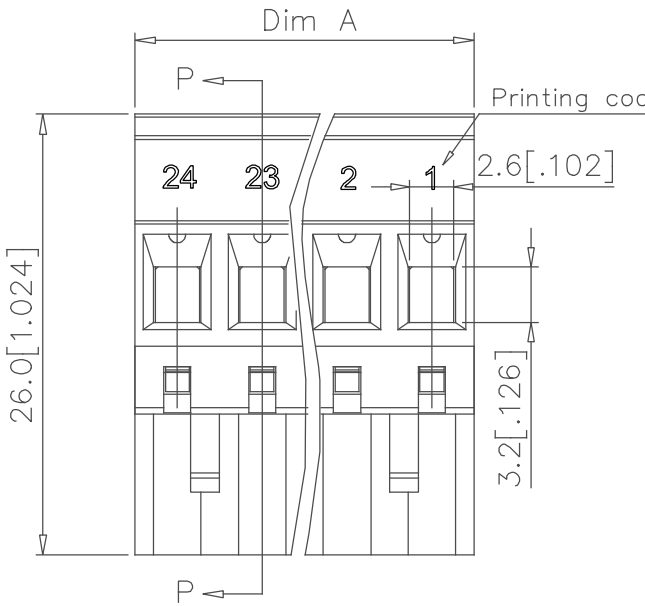


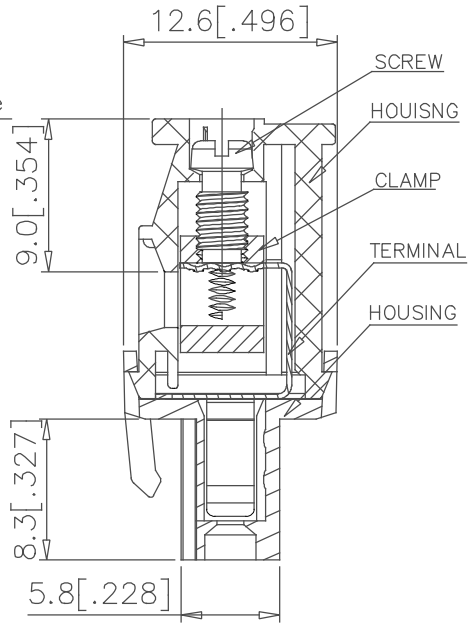


SECTION P-P

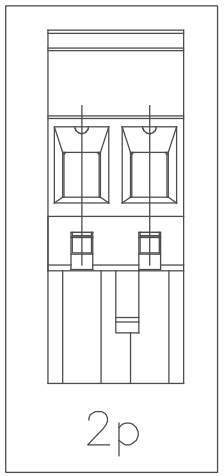


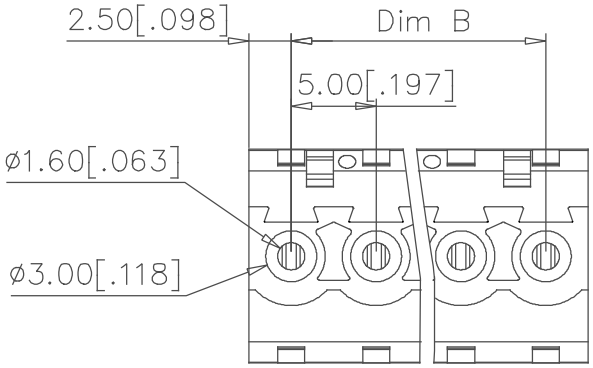


| mat'l. code | | | | surface ASME Y14.5 | tolerance ASME Y14.5 | projection | product family TERMINAL BLOCK |
|---|---|---|---|---|---|---|---|
| ltr | ecn no | dr | date | tolerances unless otherwise specified | | | title |
| J | | | | angles | linear X. ±0.5[.020] | MM [INCH] | TERMINAL BLOCK PLUGABLE, PLUG, SIGNAL, ENTRYSIDE HOOK |
| | | | | X°±1° | X.X ±0.3[.012] | | |
| | | | | | X.XX ±0.1[.004] | scale | |
| | | | | dr | BEER FU 062509 | | dwg no 20020008 sheet 4 of 5 size A4 |
| | | | | engr | BEER FU 062509 | | |
| | | | | chr | GARY HSIEH 062509 | | type CUSTOMER Drawing |
| | | | | appd | JOSEPH HSIA 062509 | | |
| sheet index | revision sheet | | | | | | |

form: A4mmXLc

Copyright FCI.

FCIconnect.com

| PRODUCT NUMBER | SERIES NAME | PITCH |
|---|---|---|
| 20020008-HXXXXXXLF | 02-508 | 5.08 mm |

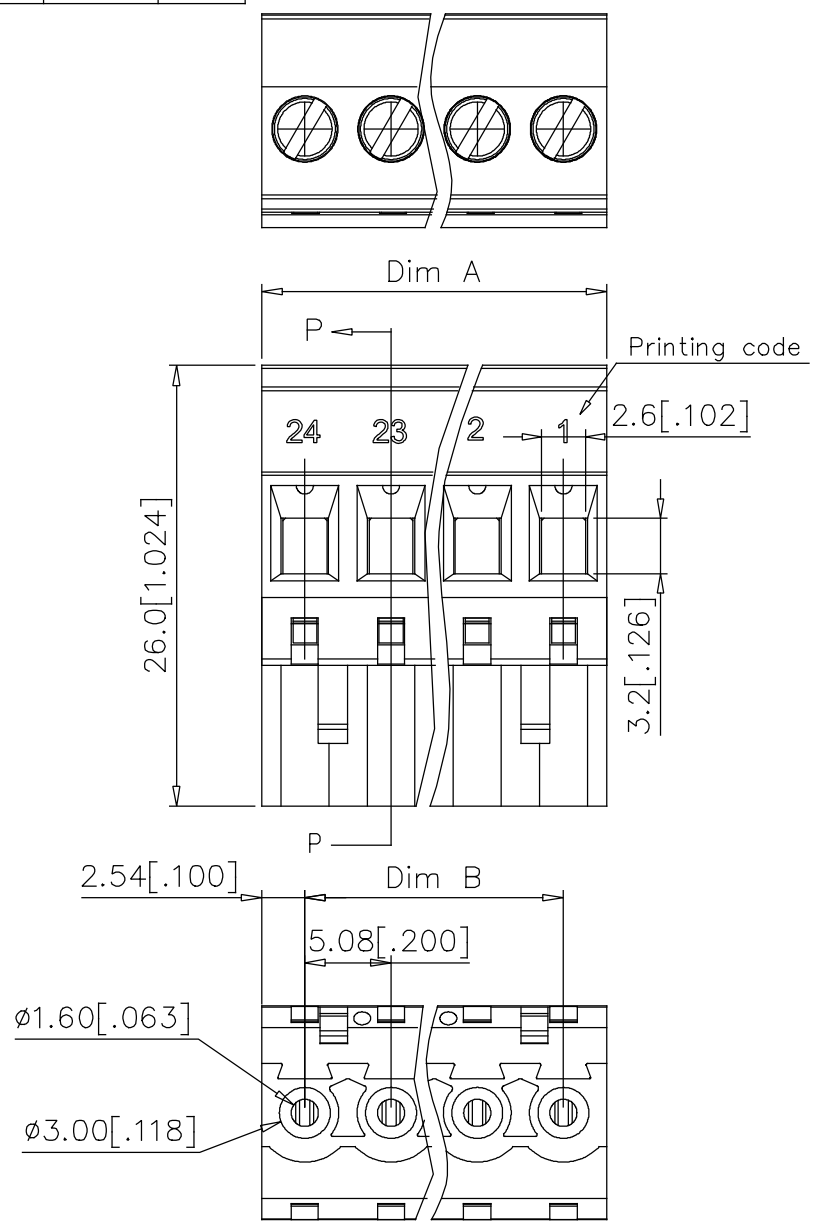


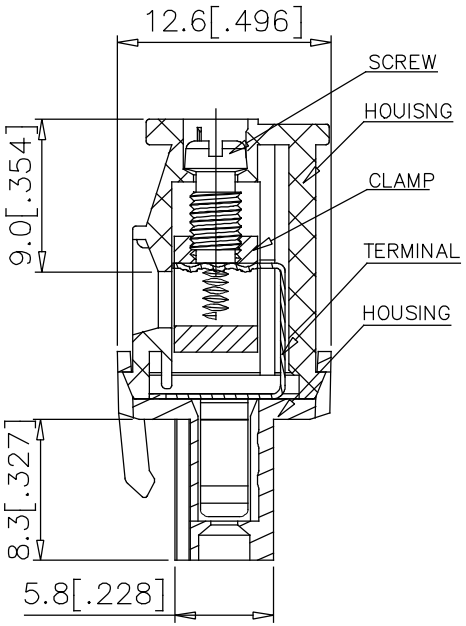


SECTION P-P

N= NUMBER OF POLES
DIMENSION

| | |
|---|---|
| Dim A | Nx5.08[.200] |
| Bim B | (N-1)x5.08[.200] |

| Poles | Tolerance |
|---|---|
| 2P-6P | ±0.15[.006] |
| 7P-12P | ±0.25[.010] |
| 13P-18P | ±0.30[.012] |
| 19P-24P | ±0.40[.016] |

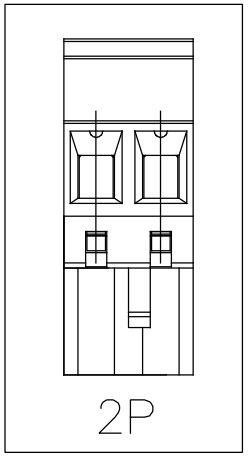


| | | | | | | | |
|---|---|---|---|---|---|---|---|
| mat'l. code | | | | surface ASME Y14.5 | tolerance ASME Y14.5 | projection | product family TERMINAL BLOCK |
| ltr | ecn no | dr | date | tolerances unless otherwise specified | | | title |
| J | | | | angles | linear X. ±0.5[.020] | MM [INCH] | TERMINAL BLOCK PLUGABLE, PLUG, SIGNAL, ENTRYSIDE HOOK |
| | | | | | X.X ±0.3[.012] | | |
| | | | | X°±1° | X.XX ±0.1[.004] | scale | |
| | | | | dr | BEER FU | 062509 | dwg no 20020008 sheet 5 of 5 size A4 |
| | | | | engr | BEER FU | 062509 | |
| | | | | chr | GARY HSIEH | 062509 | |
| | | | | appd | JOSEPH HSIA | 062509 | type CUSTOMER Drawing |
| sheet index | revision sheet | | | | | | |

form: A4mmXLc