samtec

EMBEDDED-PC PC/104 MODULES

(2.54 mm) .100"

ESW, ESQ SERIES

ELEVATED SOCKET

Mates with:
TSW, MTSW, EW, MTLW, TSS, ZSS, TSM, DW, ZW, HW, TSSH, HTSS

SPECIFICATIONS

For complete specifications see www.samtec.com?ESW or www.samtec.com?ESQ

Insulator Material:
Black Glass Filled Polyester
Contact Material:
Phosphor Bronze
Plating:
Au or Sn over
50 µ" (1.27 µm) Ni
Current Rating (ESW/TSW):
5.2 A per pin
(2 pins powered)
Current Rating (ESQ/TSW):
5.7 A per pin
(2 pins powered)
Voltage Rating:
550 VAC mated with TSW or ESQ
Operating Temp Range:
-55 °C to +125 °C with Gold
-55 °C to +105 °C with Tin
Insertion Depth:
(3.68 mm) .145" to
(6.35 mm) .250"
Normal Force:
Standard = 125 grams (4.4 N)
Max Cycles:
100 with 10 µ" (0.25 µm) Au
RoHS Compliant:
Yes
Lead-Free Solderable:
Wave only

RECOGNITIONS

For complete scope of recognitions see www.samtec.com/quality

FILE NO. E111594

TIGER BUY™ CONTACT

ALSO AVAILABLE (MOQ Required)

- Other platings

Note:
Some lengths, styles and options are non-standard, non-returnable.

TYPE STRIP – 1 – NO. PINS PER ROW – LEAD STYLE – PLATING OPTION – ROW OPTION – OTHER OPTION

ESW = Solder Tail

ESQ = Square Tail

01 thru 36

–L = 10 µ" (0.25 µm) Gold contact, Matte Tin on tail

–G = 20 µ" (0.51 µm) Gold contact, Gold Flash on Balance

–T = Matte Tin (N/A w/LIF contact)

–S = Single Row

–D = Double Row

–T = Triple Row (ESQ only)

–LL = Locking Lead

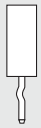

Two leads per strip crimped. N/A with single row 1 or 2 positions.

–"XXX" = Polarized

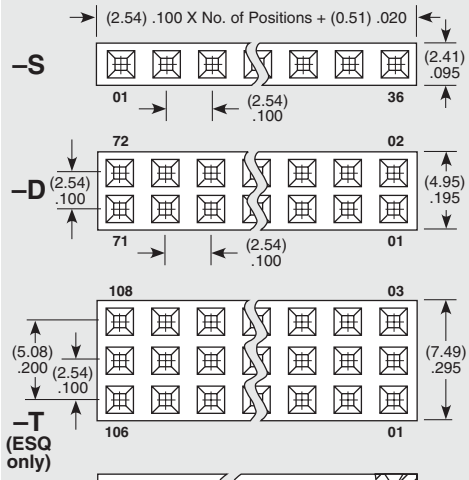

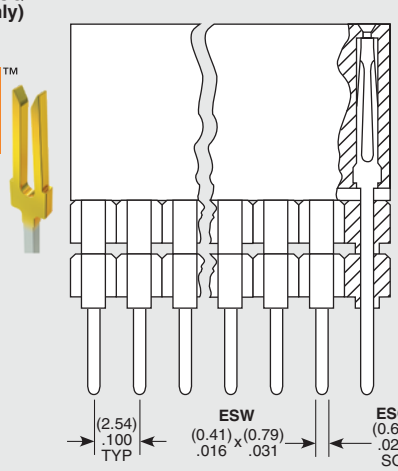

Specify LEAD STYLE from chart below.

STANDARD INSERTION FORCE	LOW INSERTION FORCE	A	B
– 12	– 37	(2.29) .090	(11.05) .435
– 13	– 38	(7.36) .290	
– 23	– 48	(4.83) .190	(13.59) .535
– 33	– 58	(2.29) .090	(16.13) .635
– 14	– 39	(12.19) .480	(11.05) .435
– 24	– 49	(9.65) .380	(13.59) .535
– 34	– 59	(7.11) .280	(16.13) .635
– 44	– 69	(4.57) .180	(18.67) .735

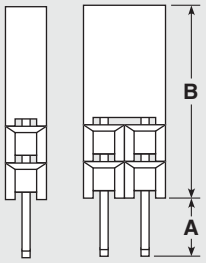

APPLICATIONS

EMBEDDED-PC PC/104 MODULES

Self Nesting Sockets

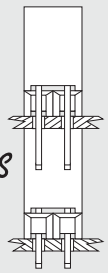

(ESQ Series)

PC/104™ J1/P1 "Stackthrough" Connectors	
Standard Insertion Force	ESQ-132-14-G-D
Low Insertion Force	ESQ-132-39-G-D
PC/104™ J1 "Non-Stackthrough" Connectors	
Standard Insertion Force	ESQ-132-12-G-D
Low Insertion Force	ESQ-132-37-G-D
PC/104™ J2/P2 "Stackthrough" Connectors	
Standard Insertion Force	ESQ-120-14-G-D
Low Insertion Force	ESQ-120-39-G-D

PC/104 is a trademark of the PC/104 Consortium.

Due to technical progress, all designs, specifications and components are subject to change without notice.

WWW.SAMTEC.COM

All parts within this catalog are built to Samtec's specifications.
Customer specific requirements must be approved by Samtec and identified in a Samtec customer-specific drawing to apply.