MICRO SWITCH
A DIVISION OF MINNEAPOLIS-HONEYWELL REGULATOR COMPANY
FREEPORT, ILLINOIS
FED. MFR. CODE 91929

SWITCH—BASIC

CATALOG LISTING
V3L - 3
CQ-A0300

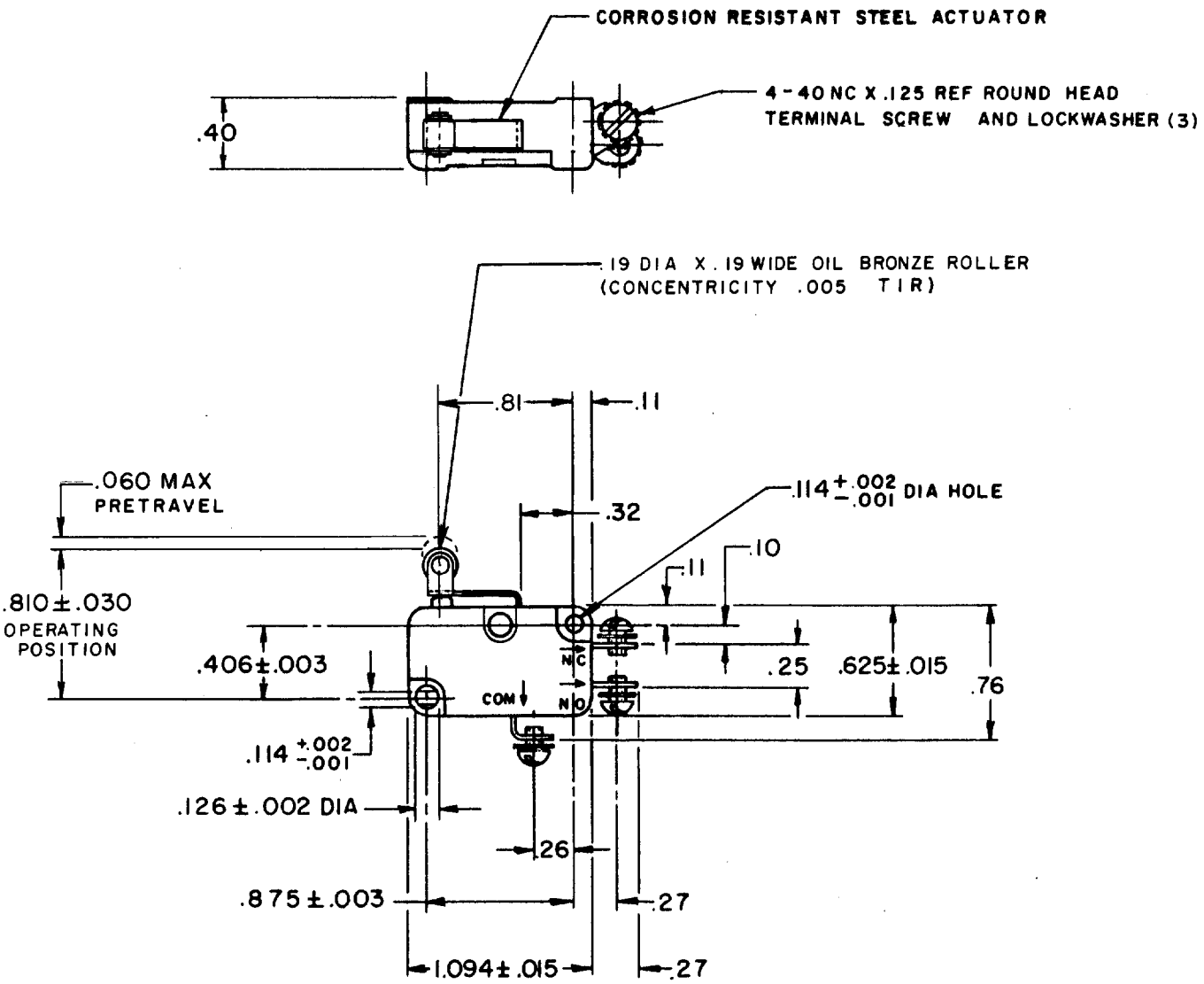

THIS DRAWING COVERS A PROPRIETARY ITEM AND IS THE PROPERTY OF MICRO SWITCH, A DIVISION OF MINNEAPOLIS-HONEYWELL REGULATOR CO. THIS DRAWING IS NOT TO BE COPIED OR USED WITHOUT THE APPROVAL OF MICRO SWITCH.

CHARACTERISTICS

OPERATING FORCE — — — — — 14 OZ MAX

RELEASE FORCE — — — — — — 3 OZ MIN

DIFFERENTIAL TRAVEL — — — — — .016 MAX

OVERTRAVEL — — — — — — — — .040 MIN

RELEASE TRAVEL — — — — — — — .007 MIN

ELECTRICAL DATA

CONTACT ARRANGEMENT
S P D T

L83
15.1A 1/2HP 125 OR 250 VAC
1/2A 125 VDC, 1/4A 250 VDC
5A 125 VAC "L"

SCALE FULL

DO NOT SCALE PRINT

UNLESS OTHERWISE SPECIFIED
DIMENSIONS ARE IN INCHES
TOLERANCES ARE:

ONE PLACE	(.0)	±.030
TWO PLACE	(.00)	±.015
THREE PLACE	(.000)	±.005
ANGLES		±

WEIGHT

V3L-3

REPLACES

RELEASE NO. SR10083

DRAWING NUMBER M 2 10

ISSUE X X X

CHECK

REVISIONS

A	CO 16973	G C H 16 MAY 62	22 FEB 62
B	CO 20189	M B F 7 SEP 65	
C	CO21900	L E B 14 AUG 67	
D	CO 24941	M B S 4 DEC 68	CHECK
E	CO 26075	M B S 27 AUG 69	22 FEB 62
F	CO 31509	R E R 22 JAN 73	
G	CO 32395	GL H 14 AUG 73	
H	CO 36987	SMA 1 OCT 85	
J	CO 76445	DCS 5 JAN 94	CHECK

DRAWN L S D 14 FEB 62

FO-50378