THIS DRAWING IS UNPUBLISHED. RELEASED FOR PUBLICATION -,- .
© COPYRIGHT - By - ALL RIGHTS RESERVED.

LOC	DIST
FT	0

REVISIONS

P	LTR	DESCRIPTION	DATE	DWN	APVD
	P	REVISED PER ECO-11-004587	11MAR11	RK	HMR

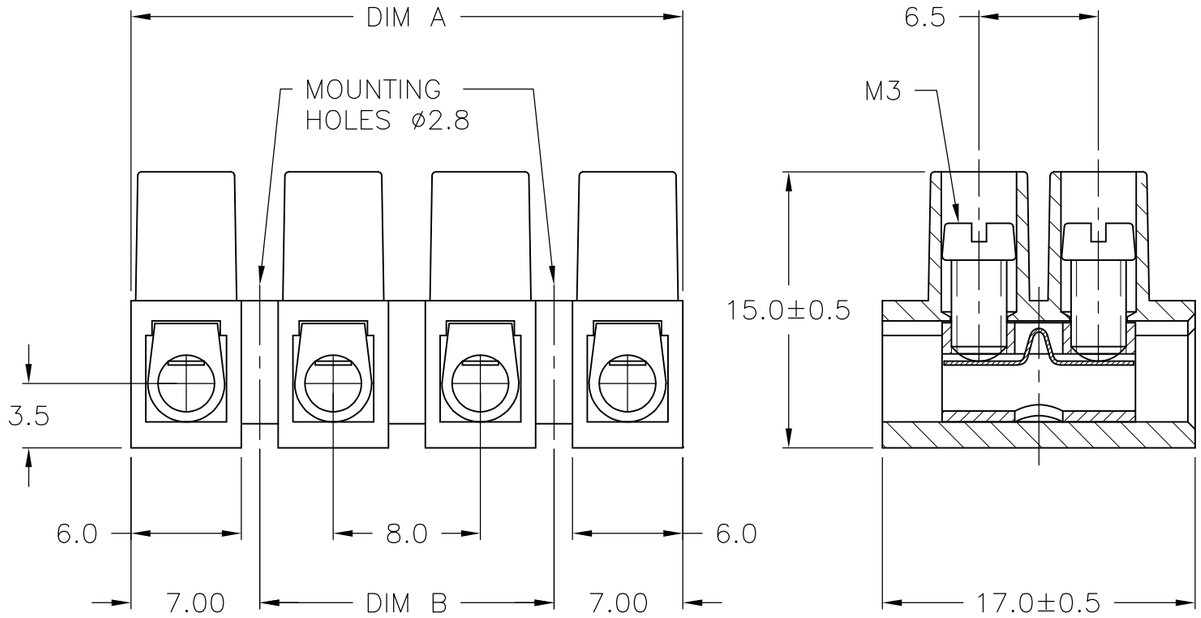

MATERIAL:
HOUSING: POLYMIDE 6 UL94V-2.
COLOR: NATURAL (OFF WHITE)
TUBULAR CONTACT: BRASS TIN PLATED.
SCREW: STEEL M3 ZINC W/ NON-HEXAVALENT CHROMATE (CHROME III).
WIRE PROTECTOR: STAINLESS STEEL

ELECTRICAL:
UL/CSA
CURRENT RATING: 30A, 250V.
WIRE RANGE: 12-22 AWG.
VDE
CURRENT RATING:
TO EN60 598: 16A
TO EN60 998: 24A
CONDUCTOR SIZE: UP TO 1.5 mm^2

DIM B	DIM A	NO POSN	CATALOG NUMBER	PART NUMBER
80.0	94.0±1.0	12	TSB23012DS	1-1776293-2
72.0	86.0±0.7	11	TSB23011DS	1-1776293-1
64.0	78.0±0.7	10	TSB23010DS	1-1776293-0
56.0	70.0±0.7	9	TSB23009DS	1776293-9
48.0	62.0±0.7	8	TSB23008DS	1776293-8
40.0	54.0±0.7	7	TSB23007DS	1776293-7
32.0	46.0±0.7	6	TSB23006DS	1776293-6
24.0	38.0±0.5	5	TSB23005DS	1776293-5
16.0	30.0±0.5	4	TSB23004DS	1776293-4
8.0	22.0±0.5	3	TSB23003DS	1776293-3
-	14.0±0.5	2	TSB23002DS	1776293-2
-	6.0±0.3	1	TSB23001DS	1776293-1

THIS DRAWING IS A CONTROLLED DOCUMENT.

DIMENSIONS: mm

TOLERANCES UNLESS OTHERWISE SPECIFIED:
0 PLC ± -
1 PLC ± .3
2 PLC ± .25
3 PLC ± -
4 PLC ± -
ANGLES ± 2

MATERIAL -
FINISH -

DWN S SCHLEGEL 3/18/05
CHK C RICHARD 3/18/05
APVD C RICHARD 3/18/05
PRODUCT SPEC —
APPLICATION SPEC —
WEIGHT —

TE Connectivity

NAME
EUROPA TERMINAL BLOCK W/WIRE PROTECTOR
MOUNTING HOLES 2.8 DIA., 8.0mm PITCH
—

SIZE	CAGE CODE	DRAWING NO	RESTRICTED TO
A3	00779	C-1776293	—

CUSTOMER DRAWING | SCALE NTS | SHEET 1 OF 1 | REV P

1470-19 (3/11)