No.	Changes and/or Note No.	Date	Intr.	No.	Changes and/or Note No.	Date	Intr.

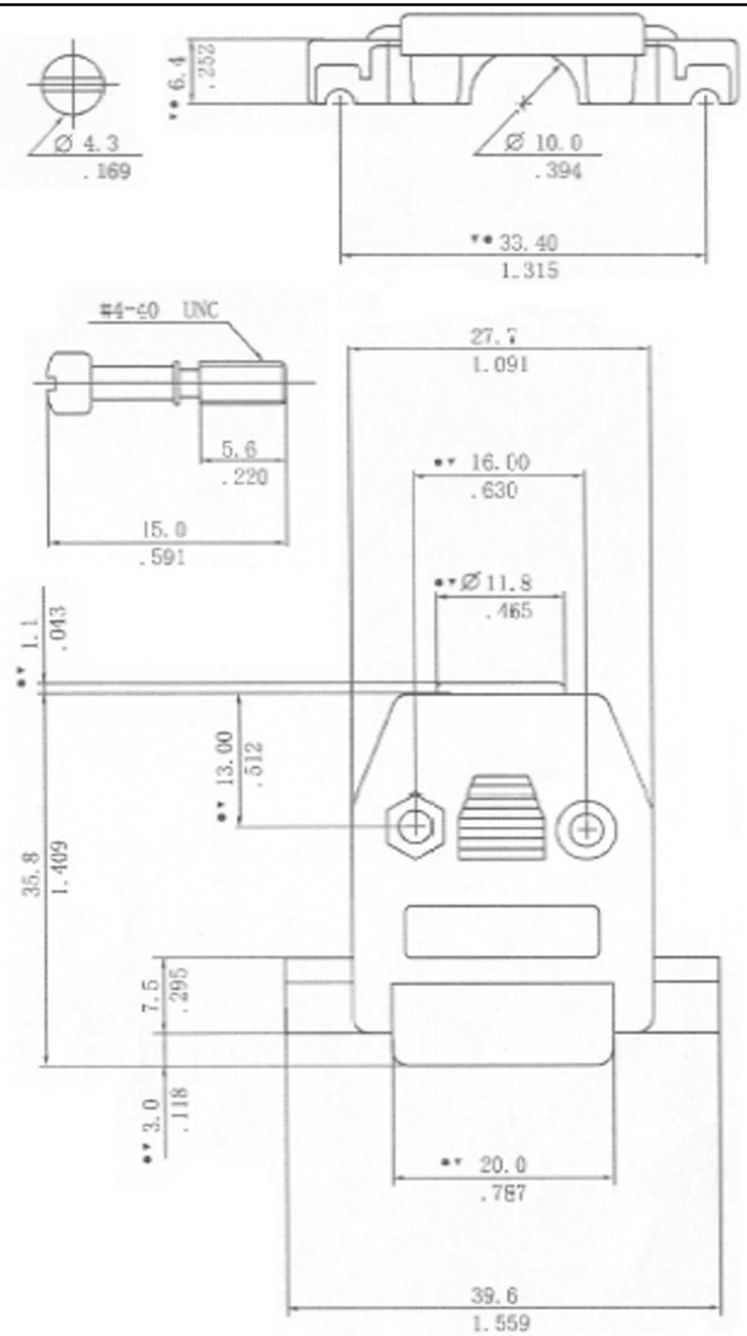

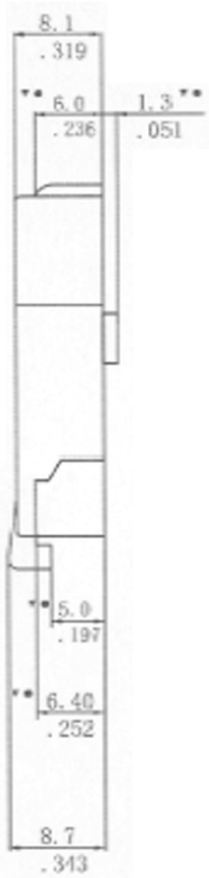

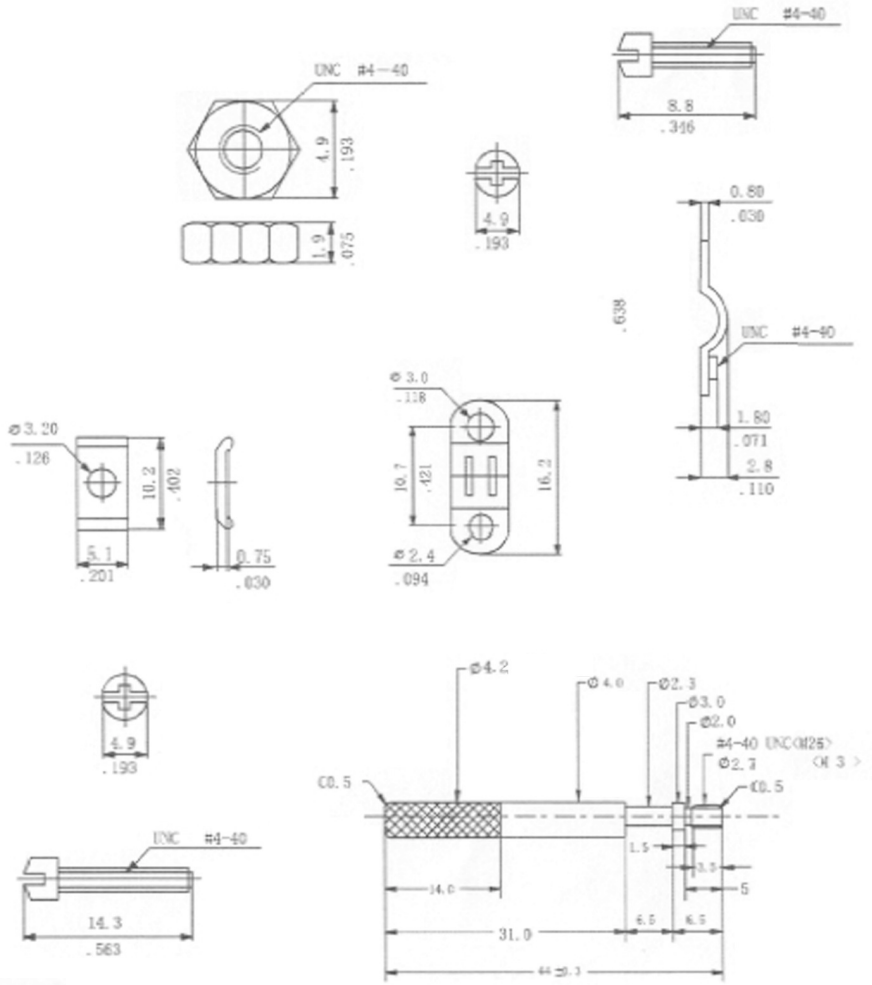

DATE	DRAWN	SCALE	MATERIAL TYPE
02/04/08	AS		
P/N:2360-0102-22,15WAYS,BK P/N:2360-0102-32,15WAYS,LG	APPROVED		REPLACES

encitech connectors AB

CCOV-15-SCL-BLACK
CCOV-15-SCL-LIGHT GREY

DRAWING No