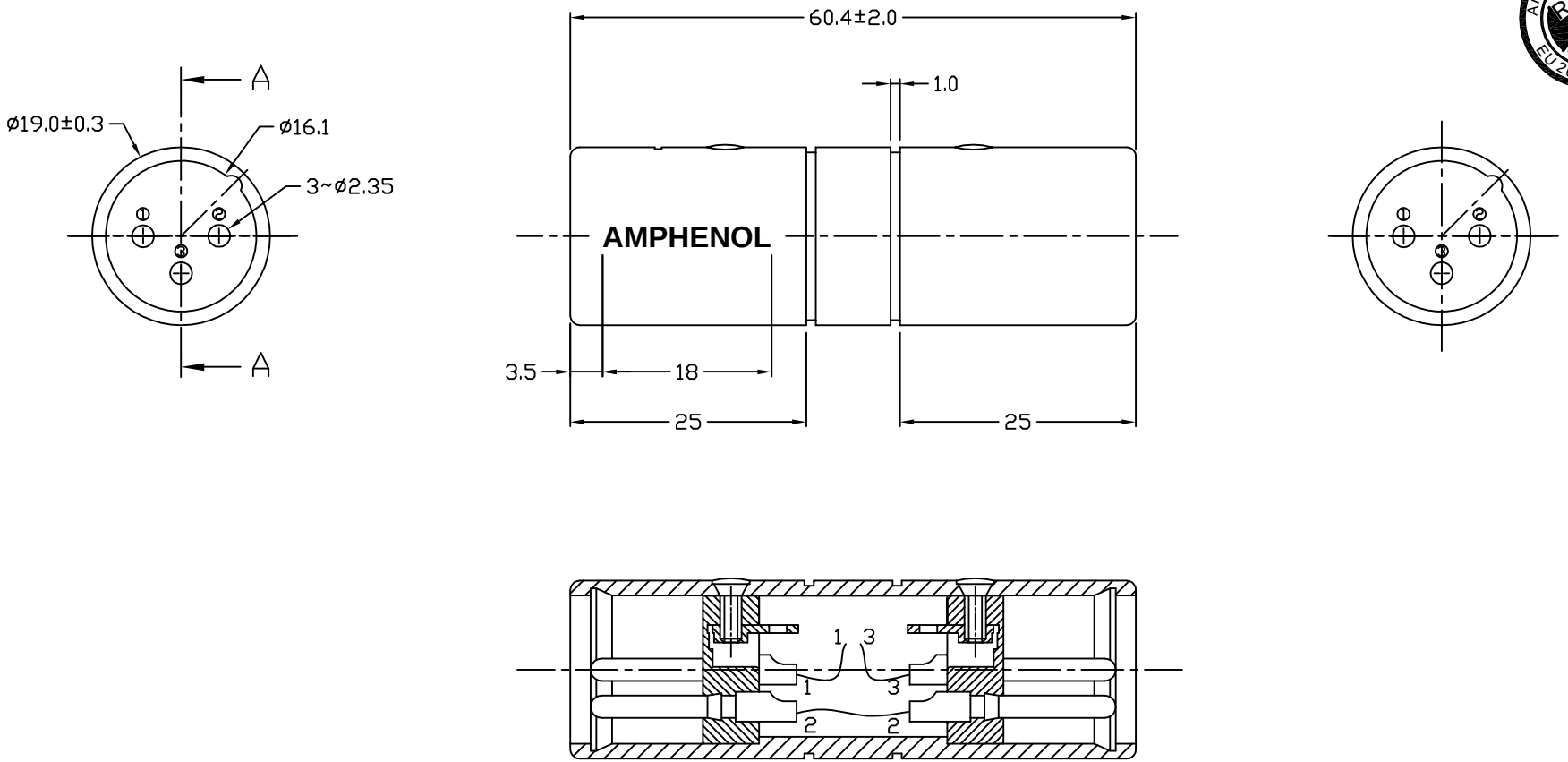

SECTION A-A

NOTE:
AMPHENOL LOGO: ARIAL-UPPER CASE BOLD 18mm LONG 2.35mm HIGH

PART No	DESCRIPTION
55010029-322	NICKEL FINISH SHELL
55010029-422	BLACK FINISH SHELL

UNLESS OTHERWISE SPECIFIED TOLERANCE TO BE LINEAR: X ± 0.50, X,X ± 0.10, X,XX± 0,05 / ANGULAR: X° ± 1°, X'X' ± 30', X"X"X" ± 15'	THIS DOCUMENT IS THE PROPERTY OF AMPHENOL AUSTRALIA PTY. LTD.. NO PART THEREOF MAY BE REPRODUCED AND USED WITHOUT THE PRIOR WRITTEN CONSENT OF THE OWNER			0	FIRST ISSUE	L.VO.	16-11-00	----
				REV.	CHANGE DETAILS	BY	DATE	CHG/No
BREAK ALL SHARP EDGES AND REMOVE ALL BURRS	CAD FILE: 55010029X22110	DRN: L.VO.	DATE:16-11-00	TITLE: 3 POLE MALE - MALE ADAPTOR		Amphenol		
	MATL: REFER TO TABLE	CKD: M.N.H	DATE: 19-12-00			Amphenol Australia Pty.Ltd, 2 Fiveways Blvd, Keysborough, Vic.3173		
DO NOT SCALE	FINISH: REFER TO TABLE	APP'D: P.M	DATE: 21-12-00			DRAWING NO.		SHEET
DIMENSIONS IN MILLIMETRES	THIRD ANGLE PROJECTION	SCALE: 2:1 UOS	PART No: 55010029-*22	SIZE: A3		55010029-*22-1		1 OF 1