LTR	EN	DESCRIPTION	APPR	BY	DATE
A	–	INITIAL RELEASE	RB	EM	2–10–04

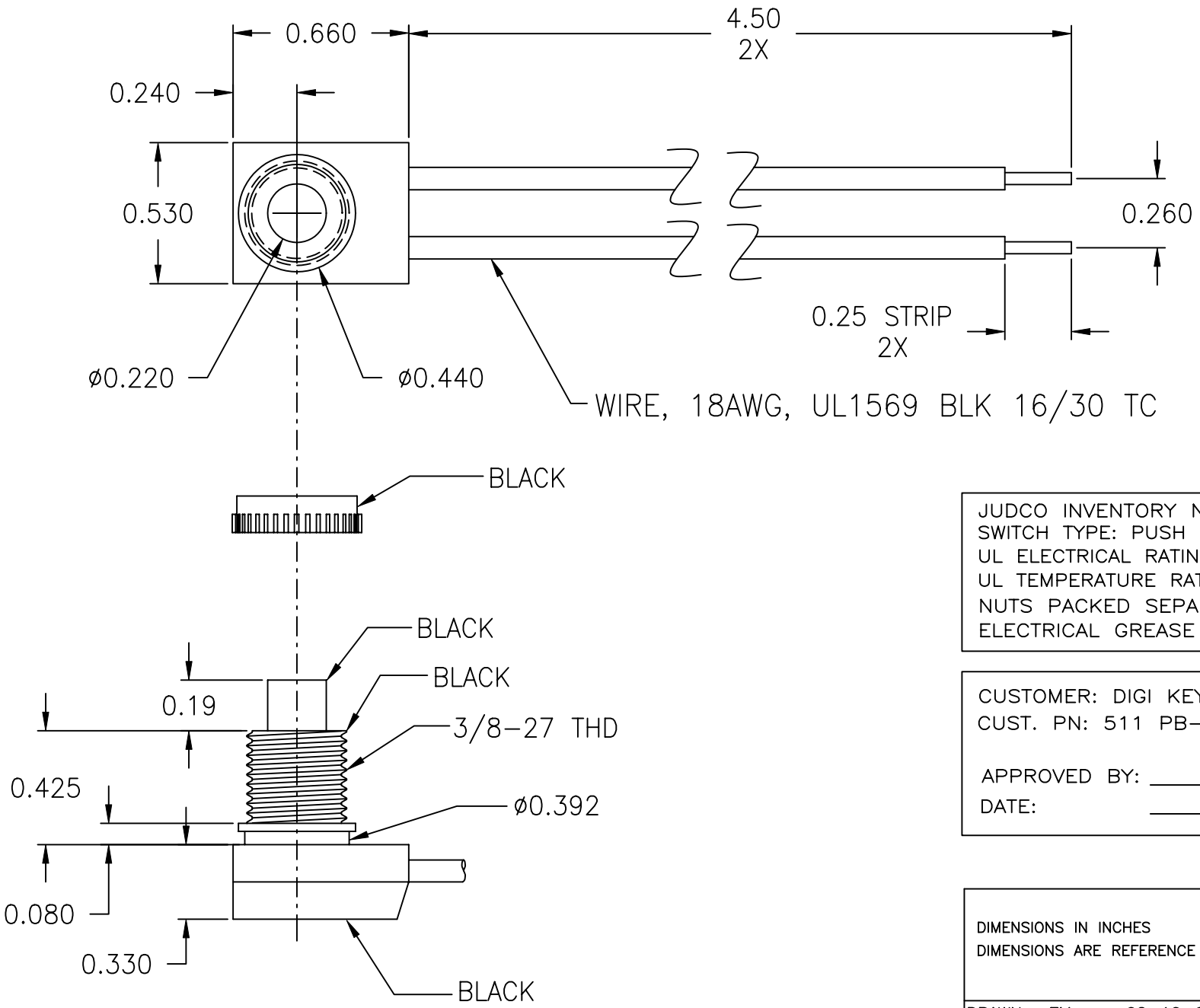

JUDCO INVENTORY NO. 40–3145–01
SWITCH TYPE: PUSH ON – PUSH OFF, SPST
UL ELECTRICAL RATING: 125VAC, 6A, 6A–L
UL TEMPERATURE RATING: 65°C
NUTS PACKED SEPARATELY
ELECTRICAL GREASE ADDED: SYNTECH 2292G2

CUSTOMER: DIGI KEY
CUST. PN: 511 PB–ND

APPROVED BY: _____
DATE: _____

DIMENSIONS IN INCHES
DIMENSIONS ARE REFERENCE

DRAWN:	EM	02–10–04
APPR:	KJ	02–10–04

1415U569A.DWG

JUDCO ®
HARBOR CITY CALIFORNIA

TITLE OUTLINE
J–188A–1 ULAC

DWG. NO. 1415–569

SHEET 1 OF 1

This document embodies a product, component, and/or design proprietary to JUDCO MANUFACTURING INC., and which is protected either as a trade secret, by U.S. Patent, or by copyright. It may not be used in any way without written express consent of JUDCO MANUFACTURING INC.