# Axial Leads/Ceralam®

## GENERAL DESCRIPTION

**AVX MA Series**

**Molded Axial Leaded MLC**

**Temperature Coefficient:** C0G (NP0), X7R, Z5U
50V, 100V and 200V

**Case Material:** Molded Epoxy

**Lead Material:** Solderable

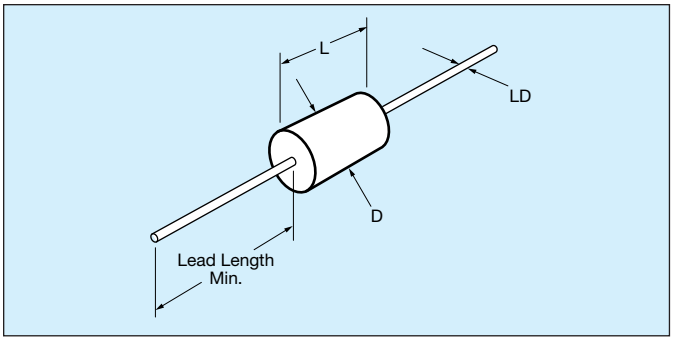


## HOW TO ORDER

| MA10 | 5 | E | 104 | Z | A | A |
|---|---|---|---|---|---|---|
| **Molded Axial Size** | **Voltage** | **Dielectric** | **Capacitance** | **Capacitance Tolerance** | **Failure Rate** | **Leads** |
| MA10<br>MA20<br>MA30<br>MA40<br>MA50<br>MA60 | 5 = 50V<br>1 = 100V<br>2 = 200V | A = C0G (NP0)<br>C = X7R<br>E = Z5U | First two digits are the significant figures of capacitance. Third digit indicates the additional number of zeros. For example, order 100,000 pF as 104. (For values below 10pF use "R" in place of decimal point, e.g., 1R4 = 1.4pF.) | C0G (NP0):<br>F = ±1%<br>J = ±5%<br>K = ±10%<br>M = ±20%<br>D = ±0.5pF<br><10pF only<br>X7R:<br>J = ±5%<br>K = ±10%<br>M = ±20%<br>Z5U:<br>M = ±20%<br>Z = +80%<br>-20% | A = Not Applicable | A = Standard |

**Not RoHS Compliant**

‡ C tolerance available C0G (NP0) from 1.0 to 9.1 pF only. Minimum tolerance for values 10 pF - 100 pF is D or F whichever is greater.

## MARKING (EXAMPLE)

Line 1, A (for AVX), 5 = 50 Volts (V is optional),
E = TC Line 2, 104Z = Capacitance Code

Line 3, Tolerance, 2 digit Lot Code
Date Code: 8 = 2008
10 = Week

Four Digit Date Code Optional

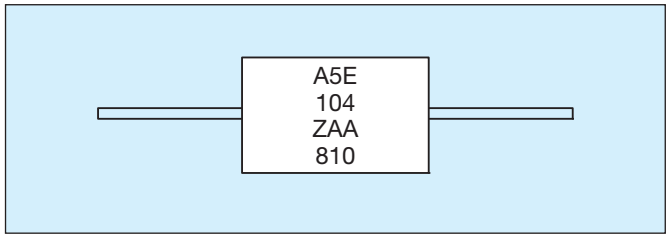


## MILITARY CROSS REFERENCE AND DIMENSIONS GUIDE

| Per MIL-Spec | | | | Case Size | | |
|---|---|---|---|---|---|---|
| **AVX Style** | **MIL-C-11015** | **MIL-PRF-39014** | **MIL-PRF-20** | **Length (L)** | **Diameter (D)** | **Lead Diameter (LD)** |
| MA10 | CK12 | CKR11 | CCR75/CC75 | 4.07 ± .25<br>(.160" ± .010") | 2.29 ± .25<br>(.090" ± .010") | .48 ± .05<br>(.019" ± .002") |
| MA20 | CK13 | CKR12 | CCR76/CC76 | 6.35 ± .25<br>(.250" ± .010") | 2.29 ± .25<br>(.090" ± .010") | .48 ± .05<br>(.019" ± .002") |
| MA40 | CK14 | CKR14 | CCR77/CC77 | 9.91 ± .25<br>(.390" ± .010") | 3.56 ± .25<br>(.140" ± .010") | .63 ± .05<br>(.025" ± .002") |
| MA50 | CK15 | CKR15 | CCR78/CC78 | 12.7 ± .51<br>(.500" ± .020") | 6.35 ± .38<br>(.250" ± .015") | .63 ± .05<br>(.025" ± .002") |
| MA60 | CK16 | CKR16 | CCR79/CC79 | 17.53 ± .51<br>(.690" ± .020") | 8.89 ± .51<br>(.350" ± .015") | .63 ± .05<br>(.025" ± .002") |

For Military/Established Reliability Molded/Axial Lead see MIL-C-11015, MIL-PRF-39014, MIL-PRF-20 Section.

Dimensions: Millimeters (Inches)

# Axial Leads/Ceralam®

## C0G (NP0) Dielectric

### SIZE AND CAPACITANCE SPECIFICATIONS

Dimensions: Millimeters (Inches)

| | AVX Style | MA10 | | | MA20 | | | MA30 | | | MA40 | | | MA50 | | | MA60 | | |
|---|---|---|---|---|---|---|---|---|---|---|---|---|---|---|---|---|---|---|---|
| | Length | 4.07 ± .25 (.160" ± .010") | | | 6.35 ± .25 (.250" ± .010") | | | 6.09 ± .25 (.240" ± .010") | | | 9.91 ± .25 (.390" ± .010") | | | 12.7 ± .51 (.500" ± .020") | | | 17.53 ± .51 (.690" ± .020") | | |
| | Diameter | 2.29 ± .25 (.090" ± .010") | | | 2.29 ± .25 (.090" ± .010") | | | 3.30 ± .25 (.130" ± .010") | | | 3.56 ± .25 (.140" ± .010") | | | 6.35 ± .38 (.250" ± .015") | | | 8.89 ± .51 (.350" ± .015") | | |
| | Lead Diameter | .48 ± .05 (.019" ± .002") | | | .48 ± .05 (.019" ± .002") | | | .48 ± .05 (.019" ± .002") | | | .63 ± .05 (.025" ± .002") | | | .63 ± .05 (.025" ± .002") | | | .63 ± .05 (.025" ± .002") | | |
| | Lead Length | 25.4 (1.00") | | | 25.4 (1.00") | | | 25.4 (1.00") | | | 25.4 (1.00") | | | 25.4 (1.00") | | | 25.4 (1.00") | | |
| Cap. in pF | Typical AVX Part Nos. | WVDC | | | WVDC | | | WVDC | | | WVDC | | | WVDC | | | WVDC | | |
| | | 200 | 100 | 50 | 200 | 100 | 50 | 200 | 100 | 50 | 200 | 100 | 50 | 200 | 100 | 50 | 200 | 100 | 50 |
| 1.0 to 9.1 | MA-----5A1R0DAA<br>MA-----5A9R1DAA | ■ | ■ | ■ | | | | | | | | | | | | | | | |
| 10<br>12<br>15 | MA----5A100KAA<br>MA----5A120KAA<br>MA----5A150KAA | ■ | ■ | ■ | | | | | | | | | | | | | | | |
| 18<br>22<br>27 | MA----5A180KAA<br>MA----5A220KAA<br>MA----5A270KAA | ■ | ■ | ■ | | | | | | | | | | | | | | | |
| 33<br>39<br>47 | MA-----5A330KAA<br>MA-----5A390KAA<br>MA-----5A470KAA | ■ | ■ | ■ | | | | | | | | | | | | | | | |
| 56<br>68<br>82 | MA----5A560KAA<br>MA----5A680KAA<br>MA----5A820KAA | ■ | ■ | ■ | | | | | | | | | | | | | | | |
| 100<br>120<br>150 | MA----5A101KAA<br>MA----5A121KAA<br>MA----5A151KAA | ■ | ■ | ■ | ■ | ■ | ■ | | | | | | | | | | | | |
| 180<br>220<br>270 | MA----5A181KAA<br>MA----5A221KAA<br>MA----5A271KAA | ■ | ■ | ■ | ■ | ■ | ■ | ■ | ■ | ■ | ■ | ■ | ■ | | | | | | |
| 330<br>390<br>470 | MA----5A331KAA<br>MA----5A391KAA<br>MA----5A471KAA | | ■ | ■ | | ■ | ■ | ■ | ■ | ■ | ■ | ■ | ■ | | | | | | |
| 560<br>680<br>820 | MA----5A561KAA<br>MA----5A681KAA<br>MA----5A821KAA | | ■ | ■ | | ■ | ■ | ■ | ■ | ■ | ■ | ■ | ■ | | | | | | |
| 1000<br>1200<br>1500 | MA----5A102KAA<br>MA----5A122KAA<br>MA----5A152KAA | | | ■ | | ■ | ■ | ■ | ■ | ■ | ■ | ■ | ■ | ■ | ■ | ■ | | | |
| 1800<br>2200<br>2700 | MA----5A182KAA<br>MA----5A222KAA<br>MA----5A272KAA | | | | | | ■ | | ■ | ■ | ■ | ■ | ■ | ■ | ■ | ■ | | | |
| 3300<br>3900<br>4700 | MA----5A332KAA<br>MA----5A392KAA<br>MA----5A472KAA | | | | | | | | ■ | ■ | | ■ | ■ | ■ | ■ | ■ | ■ | ■ | ■ |
| 5600<br>6800<br>8200 | MA----5A562KAA<br>MA----5A682KAA<br>MA----5A822KAA | | | | | | | | | ■ | | ■ | ■ | ■ | ■ | ■ | ■ | ■ | ■ |
| 10,000<br>12,000<br>15,000 | MA----5A103KAA<br>MA----5A123KAA<br>MA----5A153KAA | | | | | | | | | | | | ■ | | ■ | ■ | ■ | ■ | ■ |
| 18,000<br>22,000<br>27,000 | MA----5A183KAA<br>MA----5A223KAA<br>MA----5A273KAA | | | | | | | | | | | | | | ■ | ■ | ■ | ■ | ■ |
| 33,000<br>39,000<br>47,000 | MA----5A333KAA<br>MA----5A393KAA<br>MA----5A473KAA | | | | | | | | | | | | | | | ■ | | ■ | ■ |
| 56,000<br>68,000<br>82,000 | MA----5A563KAA<br>MA----5A683KAA<br>MA----5A823KAA | | | | | | | | | | | | | | | ■ | | ■ | ■ |
| 100,000<br>120,000<br>150,000 | MA----5A104KAA<br>MA----5A124KAA<br>MA----5A154KAA | | | | | | | | | | | | | | | | | ■ | ■ |

For other tolerances see Part No. Codes
For other voltages see Part No. Codes.
AVX Style

# Axial Leads/Ceralam®

## X7R Dielectric

### SIZE AND CAPACITANCE SPECIFICATIONS

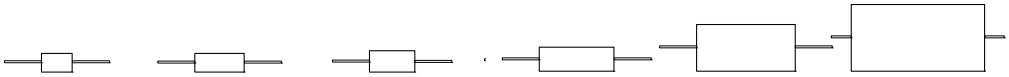

Dimensions: Millimeters (Inches)

| | AVX Style | MA10 | | | MA20 | | | MA30 | | | MA40 | | | MA50 | | | MA60 | | |
|---|---|---|---|---|---|---|---|---|---|---|---|---|---|---|---|---|---|---|---|
| | Length | 4.07 ± .25 (.160" ± .010") | | | 6.35 ± .25 (.250" ± .010") | | | 6.09 ± .25 (.240" ± .010") | | | 9.91 ± .25 (.390" ± .010") | | | 12.7 ± .51 (.500" ± .020") | | | 17.53 ± .51 (.690" ± .020") | | |
| | Diameter | 2.29 ± .25 (.090" ± .010") | | | 2.29 ± .25 (.090" ± .010") | | | 3.30 ± .25 (.130" ± .010") | | | 3.56 ± .25 (.140" ± .010") | | | 6.35 ± .38 (.250" ± .015") | | | 8.89 ± .51 (.350" ± .015") | | |
| | Lead Diameter | .48 ± .05 (.019" ± .002") | | | .48 ± .05 (.019" ± .002") | | | .48 ± .05 (.019" ± .002") | | | .63 ± .05 (.025" ± .002") | | | .63 ± .05 (.025" ± .002") | | | .63 ± .05 (.025" ± .002") | | |
| | Lead Length | 25.4 (1.00") | | | 25.4 (1.00") | | | 25.4 (1.00") | | | 25.4 (1.00") | | | 25.4 (1.00") | | | 25.4 (1.00") | | |
| Cap. in pF | Typical AVX Part Nos. | WVDC | | | WVDC | | | WVDC | | | WVDC | | | WVDC | | | WVDC | | |
| | | 200 | 100 | 50 | 200 | 100 | 50 | 200 | 100 | 50 | 200 | 100 | 50 | 200 | 100 | 50 | 200 | 100 | 50 |
| 220 | MA____5C221KAA | | | | | | | | | | | | | | | | | | |
| 270 | MA____5C271KAA | | | | | | | | | | | | | | | | | | |
| 330 | MA____5C331KAA | | | | | | | | | | | | | | | | | | |
| 390 | MA____5C391KAA | | | | | | | | | | | | | | | | | | |
| 470 | MA____5C471KAA | | | | | | | | | | | | | | | | | | |
| 560 | MA____5C561KAA | | | | | | | | | | | | | | | | | | |
| 680 | MA____5C681KAA | | | | | | | | | | | | | | | | | | |
| 820 | MA____5C821KAA | | | | | | | | | | | | | | | | | | |
| 1000 | MA____5C102KAA | | | | | | | | | | | | | | | | | | |
| 1200 | MA____5C122KAA | | | | | | | | | | | | | | | | | | |
| 1500 | MA____5C152KAA | | | | | | | | | | | | | | | | | | |
| 1800 | MA____5C182KAA | | | | | | | | | | | | | | | | | | |
| 2200 | MA____5C222KAA | | | | | | | | | | | | | | | | | | |
| 2700 | MA____5C272KAA | | | | | | | | | | | | | | | | | | |
| 3300 | MA____5C332KAA | | | | | | | | | | | | | | | | | | |
| 3900 | MA____5C392KAA | | | | | | | | | | | | | | | | | | |
| 4700 | MA____5C472KAA | | | | | | | | | | | | | | | | | | |
| 5600 | MA____5C562KAA | | | | | | | | | | | | | | | | | | |
| 6800 | MA____5C682KAA | | | | | | | | | | | | | | | | | | |
| 8200 | MA____5C822KAA | | | | | | | | | | | | | | | | | | |
| 10,000 | MA____5C103KAA | | | | | | | | | | | | | | | | | | |
| 12,000 | MA____5C123KAA | | | | | | | | | | | | | | | | | | |
| 15,000 | MA____5C153KAA | | | | | | | | | | | | | | | | | | |
| 18,000 | MA____5C183KAA | | | | | | | | | | | | | | | | | | |
| 22,000 | MA____5C223KAA | | | | | | | | | | | | | | | | | | |
| 27,000 | MA____5C273KAA | | | | | | | | | | | | | | | | | | |
| 33,000 | MA____5C333KAA | | | | | | | | | | | | | | | | | | |
| 39,000 | MA____5C393KAA | | | | | | | | | | | | | | | | | | |
| 47,000 | MA____5C473KAA | | | | | | | | | | | | | | | | | | |
| 56,000 | MA____5C563KAA | | | | | | | | | | | | | | | | | | |
| 68,000 | MA____5C683KAA | | | | | | | | | | | | | | | | | | |
| 82,000 | MA____5C823KAA | | | | | | | | | | | | | | | | | | |
| 100,000 | MA____5C104KAA | | | | | | | | | | | | | | | | | | |
| 120,000 | MA____5C124KAA | | | | | | | | | | | | | | | | | | |
| 150,000 | MA____5C154KAA | | | | | | | | | | | | | | | | | | |
| 180,000 | MA____5C184KAA | | | | | | | | | | | | | | | | | | |
| 220,000 | MA____5C224KAA | | | | | | | | | | | | | | | | | | |
| 270,000 | MA____5C274KAA | | | | | | | | | | | | | | | | | | |
| 330,000 | MA____5C334KAA | | | | | | | | | | | | | | | | | | |
| 390,000 | MA____5C394KAA | | | | | | | | | | | | | | | | | | |
| 470,000 | MA____5C474KAA | | | | | | | | | | | | | | | | | | |
| 560,000 | MA____5C564KAA | | | | | | | | | | | | | | | | | | |
| 680,000 | MA____5C684KAA | | | | | | | | | | | | | | | | | | |
| 820,000 | MA____5C824KAA | | | | | | | | | | | | | | | | | | |
| 1.0 µF | MA____5C105KAA | | | | | | | | | | | | | | | | | | |
| 1.2 µF | MA____5C125KAA | | | | | | | | | | | | | | | | | | |
| 1.5 µF | MA____5C155KAA | | | | | | | | | | | | | | | | | | |
| 1.8 µF | MA____5C185KAA | | | | | | | | | | | | | | | | | | |
| 2.2 µF | MA____5C225KAA | | | | | | | | | | | | | | | | | | |
| 2.7 µF | MA____5C275KAA | | | | | | | | | | | | | | | | | | |
| 3.3 µF | MA____5C335KAA | | | | | | | | | | | | | | | | | | |
| 3.9 µF | MA____5C395KAA | | | | | | | | | | | | | | | | | | |

For other tolerances see Part No. Codes
For other voltages see Part No. Codes.
AVX Style

# Axial Leads/Ceralam®

## Z5U Dielectric

### SIZE AND CAPACITANCE SPECIFICATIONS

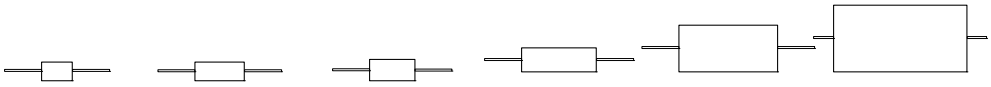

Dimensions: Millimeters (Inches)

| AVX Style | MA10 | | | MA20 | | | MA30 | | | MA40 | | | MA50 | | | MA60 | | |
|---|---|---|---|---|---|---|---|---|---|---|---|---|---|---|---|---|---|---|
| Length | 4.07 ± .25 (.160" ± .010") | | | 6.35 ± .25 (.250" ± .010") | | | 6.09 ± .25 (.240" ± .010") | | | 9.91 ± .25 (.390" ± .010") | | | 12.7 ± .51 (.500" ± .020") | | | 17.53 ± .51 (.690" ± .020") | | |
| Diameter | 2.29 ± .25 (.090" ± .010") | | | 2.29 ± .25 (.090" ± .010") | | | 3.30 ± .25 (.130" ± .010") | | | 3.56 ± .25 (.140" ± .010") | | | 6.35 ± .38 (.250" ± .015") | | | 8.89 ± .51 (.350" ± .015") | | |
| Lead Diameter | .48 ± .05 (.019" ± .002") | | | .48 ± .05 (.019" ± .002") | | | .48 ± .05 (.019" ± .002") | | | .63 ± .05 (.025" ± .002") | | | .63 ± .05 (.025" ± .002") | | | .63 ± .05 (.025" ± .002") | | |
| Lead Length | 25.4 (1.00") | | | 25.4 (1.00") | | | 25.4 (1.00") | | | 25.4 (1.00") | | | 25.4 (1.00") | | | 25.4 (1.00") | | |
| Cap. in pF / Typical AVX Part Nos. | WVDC | | | WVDC | | | WVDC | | | WVDC | | | WVDC | | | WVDC | | |
| | 200 | 100 | 50 | 200 | 100 | 50 | 200 | 100 | 50 | 200 | 100 | 50 | 200 | 100 | 50 | 200 | 100 | 50 |
| 1000 MA___5E102ZAA | | | | | | | | | | | | | | | | | | |
| 1200 MA___5E122ZAA | | | | | | | | | | | | | | | | | | |
| 1500 MA___5E152ZAA | | | | | | | | | | | | | | | | | | |
| 1800 MA___5E182ZAA | | | | | | | | | | | | | | | | | | |
| 2200 MA___5E222ZAA | | | | | | | | | | | | | | | | | | |
| 2700 MA___5E272ZAA | | | | | | | | | | | | | | | | | | |
| 3300 MA___5E332ZAA | | | | | | | | | | | | | | | | | | |
| 3900 MA___5E392ZAA | | | | | | | | | | | | | | | | | | |
| 4700 MA___5E472ZAA | | | | | | | | | | | | | | | | | | |
| 5600 MA___5E562ZAA | | | | | | | | | | | | | | | | | | |
| 6800 MA___5E682ZAA | | | | | | | | | | | | | | | | | | |
| 8200 MA___5E822ZAA | | | | | | | | | | | | | | | | | | |
| 10,000 MA___5E103ZAA | | | | | | | | | | | | | | | | | | |
| 12,000 MA___5E123ZAA | | | | | | | | | | | | | | | | | | |
| 15,000 MA___5E153ZAA | | | | | | | | | | | | | | | | | | |
| 18,000 MA___5E183ZAA | | | | | | | | | | | | | | | | | | |
| 22,000 MA___5E223ZAA | | | | | | | | | | | | | | | | | | |
| 27,000 MA___5E273ZAA | | | | | | | | | | | | | | | | | | |
| 33,000 MA___5E333ZAA | | | | | | | | | | | | | | | | | | |
| 39,000 MA___5E393ZAA | | | | | | | | | | | | | | | | | | |
| 47,000 MA___5E473ZAA | | | | | | | | | | | | | | | | | | |
| 56,000 MA___5E563ZAA | | | | | | | | | | | | | | | | | | |
| 68,000 MA___5E683ZAA | | | | | | | | | | | | | | | | | | |
| 82,000 MA___5E823ZAA | | | | | | | | | | | | | | | | | | |
| 100,000 MA___5E104ZAA | | | | | | | | | | | | | | | | | | |
| 120,000 MA___5E124ZAA | | | | | | | | | | | | | | | | | | |
| 150,000 MA___5E154ZAA | | | | | | | | | | | | | | | | | | |
| 180,000 MA___5E184ZAA | | | | | | | | | | | | | | | | | | |
| 220,000 MA___5E224ZAA | | | | | | | | | | | | | | | | | | |
| 270,000 MA___5E274ZAA | | | | | | | | | | | | | | | | | | |
| 330,000 MA___5E334ZAA | | | | | | | | | | | | | | | | | | |
| 390,000 MA___5E394ZAA | | | | | | | | | | | | | | | | | | |
| 470,000 MA___5E474ZAA | | | | | | | | | | | | | | | | | | |
| 560,000 MA___5E564ZAA | | | | | | | | | | | | | | | | | | |
| 680,000 MA___5E684ZAA | | | | | | | | | | | | | | | | | | |
| 820,000 MA___5E824ZAA | | | | | | | | | | | | | | | | | | |
| 1.0 µF MA___5E105ZAA | | | | | | | | | | | | | | | | | | |
| 1.2 µF MA___5E125ZAA | | | | | | | | | | | | | | | | | | |
| 1.5 µF MA___5E155ZAA | | | | | | | | | | | | | | | | | | |
| 1.8 µF MA___5E185ZAA | | | | | | | | | | | | | | | | | | |
| 2.2 µF MA___5E225ZAA | | | | | | | | | | | | | | | | | | |
| 2.7 µF MA___5E275ZAA | | | | | | | | | | | | | | | | | | |
| 3.3 µF MA___5E335ZAA | | | | | | | | | | | | | | | | | | |
| 3.9 µF MA___5E395ZAA | | | | | | | | | | | | | | | | | | |
| 4.7 µF MA___5E475ZAA | | | | | | | | | | | | | | | | | | |
| 5.6 µF MA___5E565ZAA | | | | | | | | | | | | | | | | | | |
| 6.8 µF MA___5E685ZAA | | | | | | | | | | | | | | | | | | |
| 8.2 µF MA___5E825ZAA | | | | | | | | | | | | | | | | | | |

For other tolerances see Part No. Codes
For other voltages see Part No. Codes.
AVX Style

## TAPE AND REEL

| CLASS I / RS-296 | |
|---|---|
| A. | 5mm ± 0.5mm (.200" ± 0.020") |
| B*. | 52.4mm ± 1.5mm (2.063" ± 0.059") |
| C. | 6.35mm ± 0.4mm (0.250" ± 0.016") |
| $D^1$-$D^2$. | 1.4mm (0.055" MAX.) |
| E. | 1.2mm (0.047" MAX.) |
| F. | 1.6mm (0.063" MAX.) |
| G. | 356mm (14.00") |
| H. | 76mm (3.000") |
| I. | 25.4mm (1.000") |
| J. | 84mm (3.300") |
| K. | 70mm (2.750") |

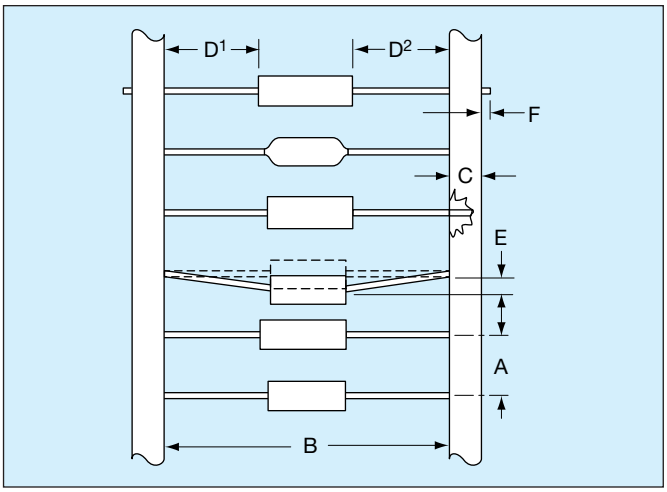


**Leader Tape:** 300mm min. (12")
**Splicing:** Tape Only
**Missing Parts:** 0.25% of component count max.-
No consecutive missing parts

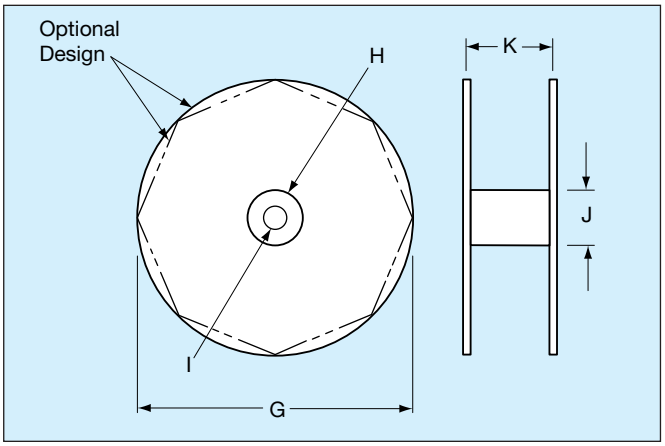


## REEL QUANTITIES (MAX.) ‡

| | | | |
|---|---|---|---|
| SA05 | 7,500 pcs. | MA10 | 5,000 pcs. |
| SA10 | 7,500 pcs. | MA20 | 5,000 pcs. |
| SA11 | 5,000 pcs. | MA30 | 3,000 pcs. |
| SA20 | 5,000 pcs. | MA40 | 3,000 pcs. |
| SA30 | 5,000 pcs. | MA50 | 950 pcs. |
| SA40 | 5,000 pcs. | MA60 | 650 pcs. |

‡ 1000 pc. reels available for distribution pack only in ±1% and ±2% tolerance.

* Standard Tape Spacing Shown. Also available in 26.0mm + 1.5mm, – 0mm, (1.023 in. + .059 in. -0 in. ) for SpinGuards only. EIA Class I, II and III tape spacings are available for molded axials. Tape spacing for Class II is 63.5mm ± 1.5mm (2.50 in ± .059 in), and for Class III 73mm ± 1.5mm (2.87 in ± .059 in)

## ADDITIONAL PACKAGING AVAILABLE

## AMMO PACK

| Tape Spacing | SA05, SA10 SA20 | SA11 SA30 | SA40 | BOX SIZES (Nominal) | | |
|---|---|---|---|---|---|---|
| | | | | L | W | H |
| 52.4mm ± 1.5mm (2.062" ± .059") | 4,000 pcs. | 2000 | 2,000 pcs. | 255mm (10.039") | 73mm (2.874") | 93mm (3.661") |
| 26.0mm + 1.5mm - 0mm (1.023" + .059" - 0") | 4,000 pcs.* | 2000 | 2,000 pcs.* | 255mm (10.039") | 48mm (1.889") | 113mm (4.448") |

*SpinGuard only

## BULK PACK (MOLDED AXIALS ONLY)

| | |
|---|---|
| MA10<br>MA20<br>MA30<br>MA40 | 100 pcs. (bag) |
| MA50<br>MA60 | 50 pcs. (bag) |