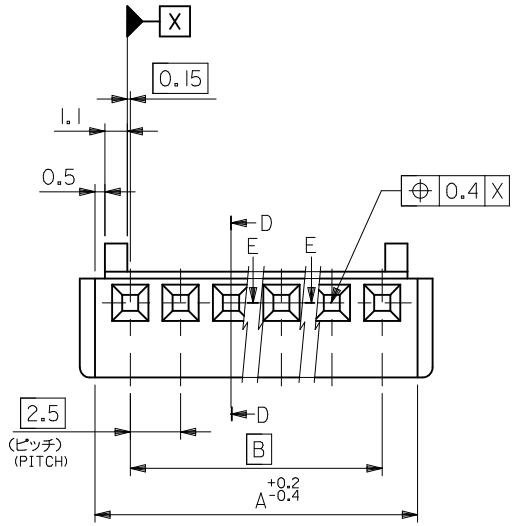

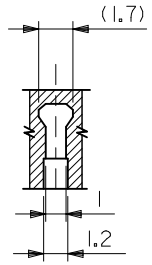

断面F－F
SECTION F-F

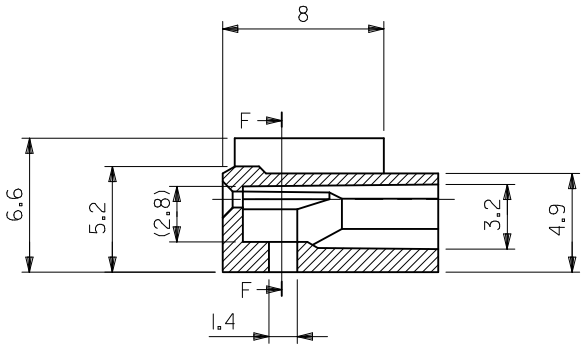

断面D－D
SECTION D-D

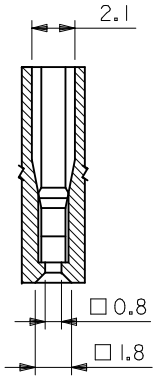

断面E－E
SECTION E-E

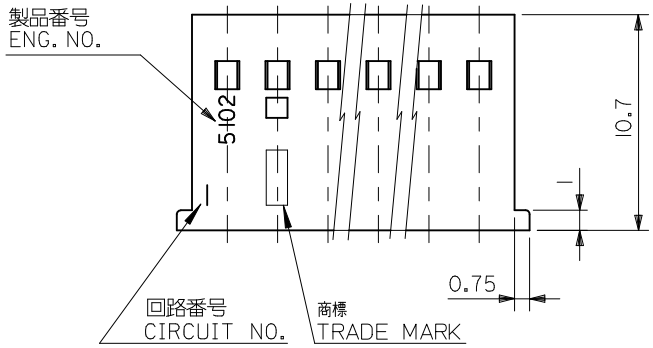

注記
NOTE
使用ターミナル：ENG. NO. 5103*
APPLICABLE TERMINAL:ENG.NO.5103*

47.5	51	22-01-1204	5102-20	20
45	48.5	-1194	-19	19
42.5	46	-1184	-18	18
40	43.5	-1174	-17	17
37.5	41	-1164	-16	16
35	38.5	-1154	-15	15
32.5	36	-1144	-14	14
30	33.5	-1134	-13	13
27.5	31	-1124	-12	12
25	28.5	-1114	-11	11
22.5	26	-1104	-10	10
20	23.5	-1094	-09	9
17.5	21	-1084	-08	8
15	18.5	-1074	-07	7
12.5	16	-1064	-06	6
10	13.5	-1054	-05	5
7.5	11	-1044	-04	4
5	8.5	-1034	-03	3
2.5	6	22-01-1024	5102-02	2
B	A	EDP. NO.	ENG. NO.	NO. OF CKTS.

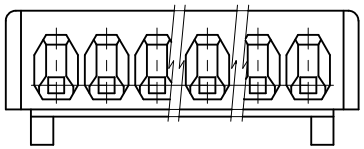

材料
MATERIAL
ナイロン66, UL94V-0
NYLON66,UL94V-0

REVISED
EC NO: J2012-0647
DRWN:ESATO 2011/11/30
CH'KD:KASAKAWA 2011/11/30
APPR:YOITO 2011/11/30
DESCRIPTION
REV
J

GENERAL TOLERANCES
(UNLESS SPECIFIED)

10 UNDER	±0.2
10 OVER 30 UNDER	±0.25
30 OVER	±0.3
ANGULAR ±3 °	

DRAFT WHERE APPLICABLE
MUST REMAIN
WITHIN DIMENSIONS

DIMENSION STYLE: MM ONLY	SCALE: 4:1	DESIGN UNITS: METRIC	THIRD ANGLE PROJECTION
DRAWN BY: H.IIJIMA	DATE: 1996/07/05	TITLE: MINI SPOX HSG	
CHECKED BY: M.FUKUSHIMA	DATE: 1996/07/05		
APPROVED BY: M.ENOMOTO	DATE: 1996/07/05	molex MOLEX INCORPORATED	
MATERIAL NO.: SEE CHART		DOCUMENT NO.: SD-5102-001	SHEET NO.: 1 OF 1
SIZE: A3	THIS DRAWING CONTAINS INFORMATION THAT IS PROPRIETARY TO MOLEX INCORPORATED AND SHOULD NOT BE USED WITHOUT WRITTEN PERMISSION		