1.8" Single Digit Display

FEATURES

- 1.8" digit height
- Right hand decimal point
- Additional colors/materials available

OPTO-ELECTRICAL CHARACTERISTICS (Ta = 25°C)

PART NO.	PEAK WAVE LENGTH (nm)	EMITTED COLOR	FACE COLORS		MAXIMUM RATINGS			OPTO-ELECTRICAL CHARACTERISTICS							PIN-OUT
			SURFACE COLOR	EPOXY COLOR	IF (mA)	VR (V)	PD (mW)	VF(V)			IR(μA)		IV(μcd)		
								Seg.-typ.	DP typ.	@mA	max.	@VR	typ. per seg.	@mA	
MTN2118-AG	567	Green	Grey	White	30	5	85	6.3	2.1	20	100	5	4600	10	1
MTN4118-AO	635	Orange	Grey	White	30	5	85	6.3	2.1	20	100	5	5200	10	1
MTN4118-AHR	635	Hi-Eff Red	Red	Red	30	5	85	6.3	2.1	20	100	5	5200	10	1
MTN7118M-31A	660	Ultra Red	Grey	White	30	4	70	5.1	1.7	20	100	4	27400	20	1
MTN2118-CG	567	Green	Grey	White	30	5	85	6.3	2.1	20	100	5	4600	10	2
MTN4118-CO	635	Orange	Grey	White	30	5	85	6.3	2.1	20	100	5	5200	10	2
MTN4118-CHR	635	Hi-Eff Red	Red	Red	30	5	85	6.3	2.1	20	100	5	5200	10	2
MTN7118M-31C	660	Ultra Red	Grey	White	30	4	70	5.1	1.7	20	100	4	27400	20	2

Operating Temperature: -25~+85, Storage Temperature: -25~+100. Other face/epoxy colors are available.

PACKAGE DIMENSIONS AND PIN FUNCTIONS

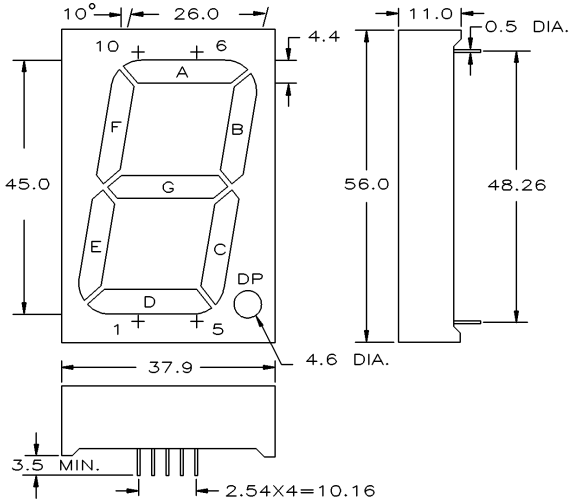

PINOUT 1
COMMON ANODE

PIN NO.	FUNCTION
1.	COMMON ANODE
2.	CATHODE E
3.	CATHODE D
4.	CATHODE C
5.	COMMON ANODE
6.	CATHODE B
7.	CATHODE A
8.	CATHODE DP
9.	CATHODE F
10.	CATHODE G

PINOUT 2
COMMON CATHODE

PIN NO.	FUNCTION
1.	COMMON CATHODE
2.	ANODE E
3.	ANODE D
4.	ANODE C
5.	COMMON CATHODE
6.	ANODE B
7.	ANODE A
8.	ANODE DP
9.	ANODE F
10.	ANODE G

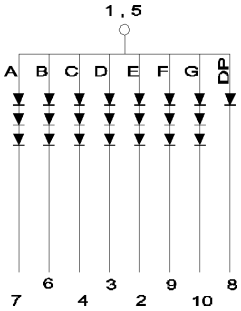

1. ALL DIMENSIONS ARE IN mm, TOLERANCE IS ±0.25mm UNLESS OTHERWISE SPECIFIED.
2. THE SLOPE ANGLE OF ANY PIN MAY BE ±5.0° MAX.

marktech optoelectronics

120 Broadway • Menands, New York 12204

Toll Free: **(800) 98-4LEDS** • Fax: (518) 432-7454