THIS DRAWING IS UNPUBLISHED. RELEASED FOR PUBLICATION -,- .
© COPYRIGHT 2005 SB ALL RIGHTS RESERVED.

LOC	DIST
GP	00

REVISIONS

P	LTR	DESCRIPTION	DATE	DWN	APVD
	B	REVISED PER ECO-14-011808	11AUG2014	AP	SB

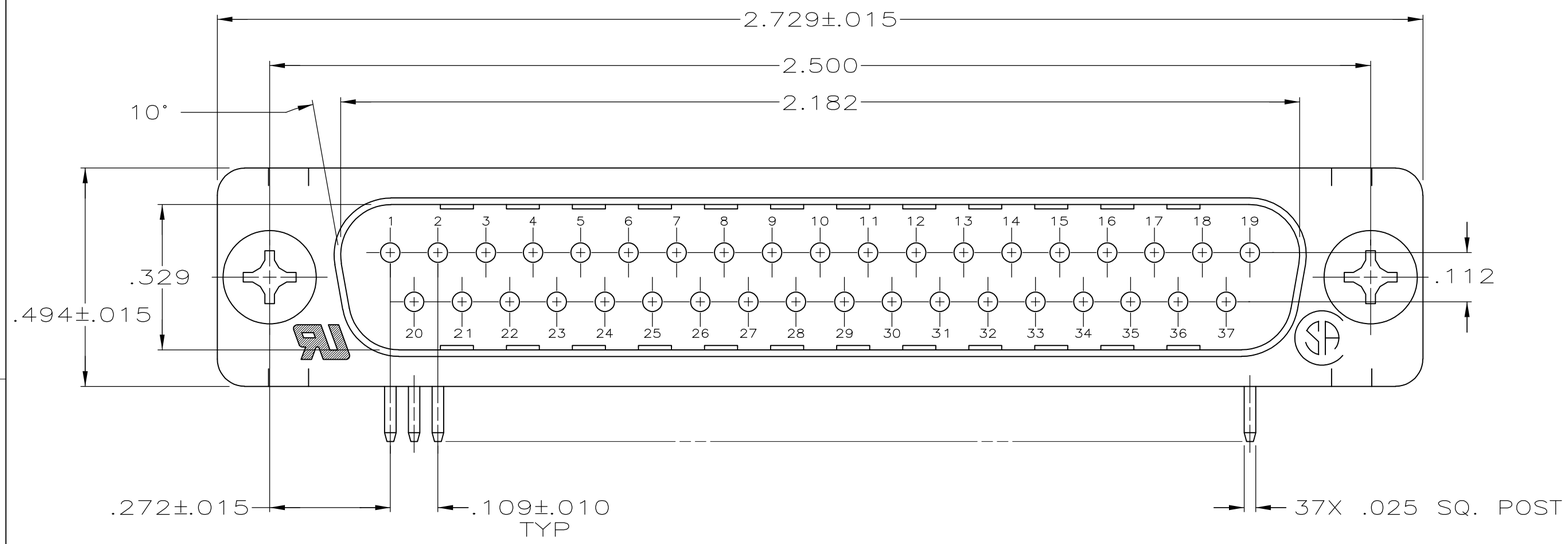

1. MOLDED PARTS: GLASS-FILLED PBT OR GLASS-FILLED NYLON, UL94V-0 RATED.COLOR: BLACK.
   SHELLS & BRACKETS: CARBON STEEL.
   CONTACTS: BRASS

2. SHELLS: .000200 MIN TIN OVER .000100 MIN COPPER.
   BRACKETS: .000200 MIN TIN OVER .000050 MIN COPPER.
   CONTACTS: GOLD PLATING FOR A LENGTH OF .150 MIN FROM MATING END, .000030 MIN GOLD IN MATED AREA, .000100 MIN TIN ON OPPOSITE END, BOTH OVER .000050 MIN NICKEL.
   -OR-
   GOLD FLASH OVER PALLADIUM NICKEL PLATED FOR A LENGTH OF .150 MIN FROM MATING END, .000030 MIN PALLADIUM NICKEL IN MATED AREA, .000100 MIN TIN ON OPPOSITE END, BOTH OVER .000050 MIN NICKEL.

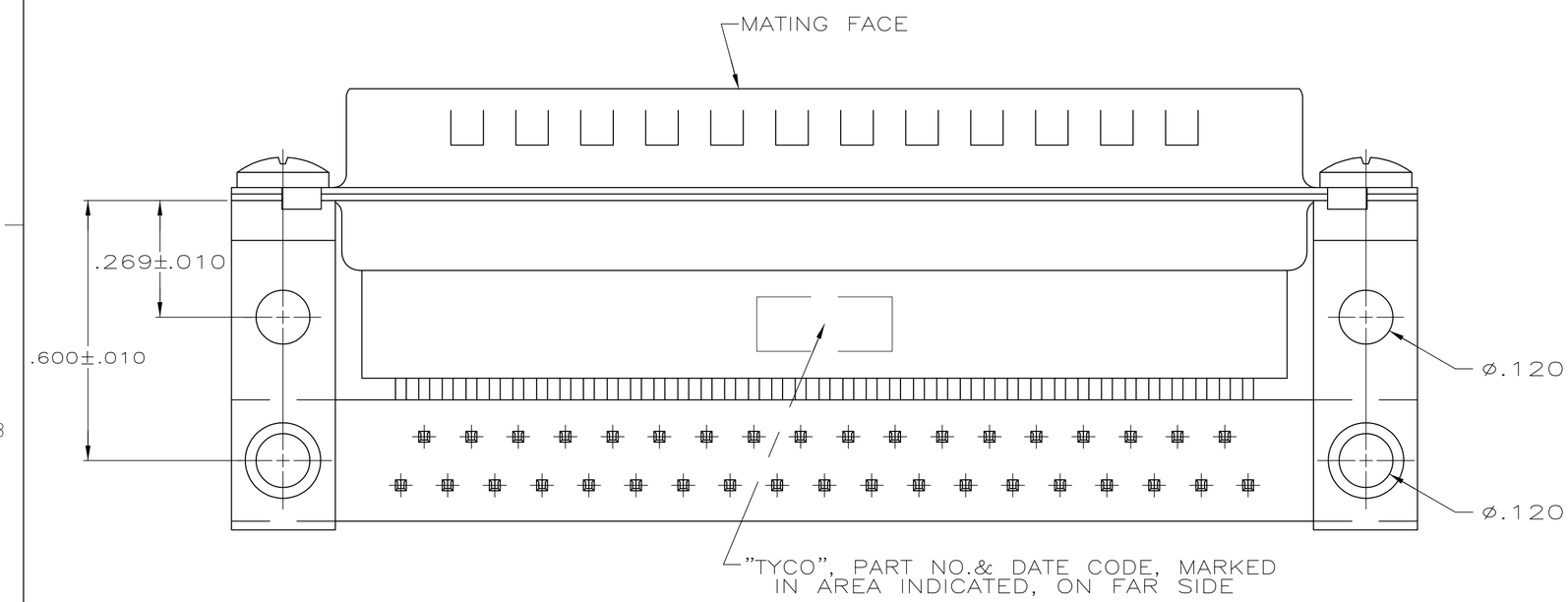

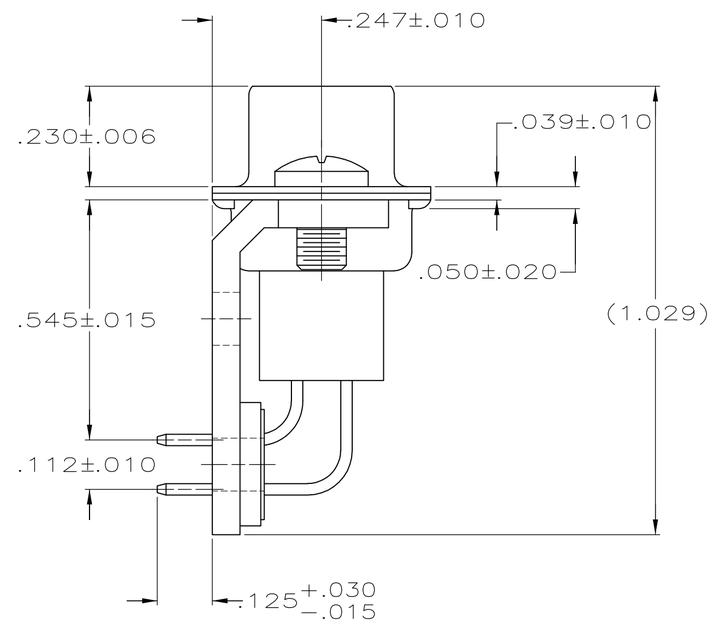

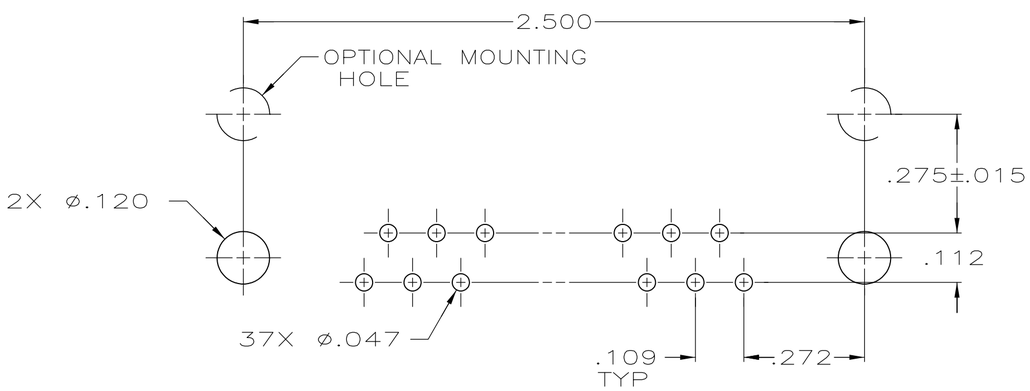

P.C. BOARD MOUNTING DIMENSIONS

5745354-4

PART NUMBER

THIS DRAWING IS A CONTROLLED DOCUMENT.

DIMENSIONS: INCHES

TOLERANCES UNLESS OTHERWISE SPECIFIED:
0 PLC ± -
1 PLC ± -
2 PLC ± -
3 PLC ± .005
4 PLC ± -
ANGLES ± 2°

MATERIAL 1

FINISH 2

DWN	D. HENNY	8-24-05
CHK	S. BOLASH	8-24-05
APVD	M. WALMSLEY	8-24-05
PRODUCT SPEC	108-40025	
APPLICATION SPEC	114-40013	
WEIGHT	—	

TE Connectivity

NAME: PLUG ASSEMBLY, SIZE 4, 37 POSITION, RIGHT ANGLE, .545 SERIES, .025 SQ. POSTS, AMPLIMITE HDP

SIZE	CAGE CODE	DRAWING NO	RESTRICTED TO
A2	00779	C-5745354	—

CUSTOMER DRAWING | SCALE 4:1 | SHEET 1 OF 1 | REV B

5745354

1471-9 (3/11)