THIS DRAWING IS UNPUBLISHED. RELEASED FOR PUBLICATION MAY ,1977.
© COPYRIGHT 1977 By – ALL RIGHTS RESERVED.

REVISIONS
変更

P	LTR	DESCRIPTION	DATE	DWN	APVD
	R3	REVISED (ECR-16-017909)	03JAN2017	T.Q	W.H

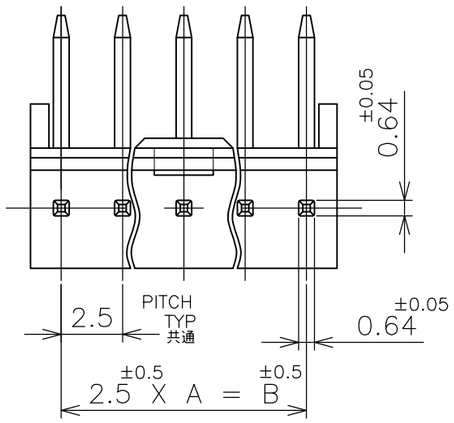

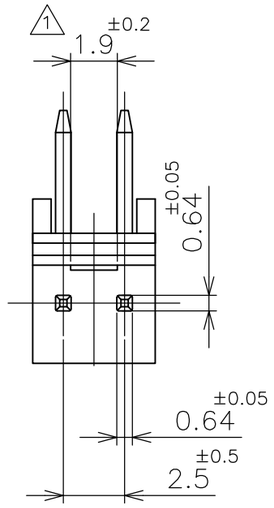

1 LOCKING HOLE IS PLACED ON THE CENTER OF POST HEADER.
2 MANUFACTURED BY AMP-BRASIL ONLY
3 OBSOLETED RED AND GREEN COLOR PARTS.

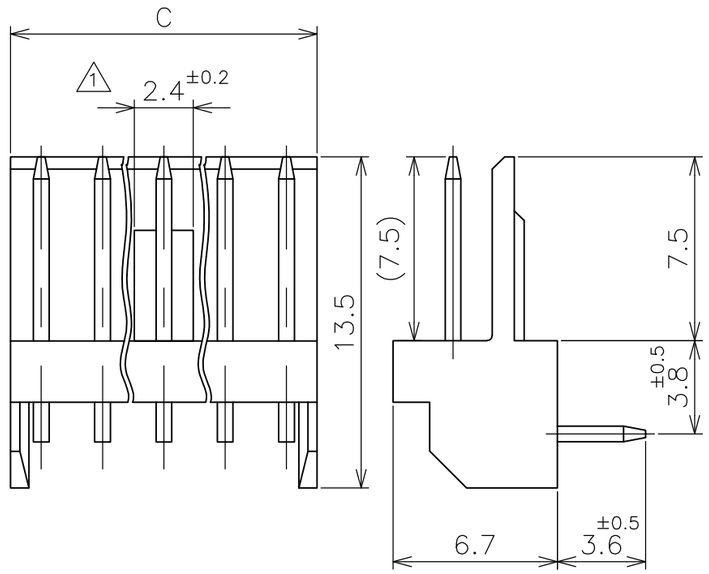

3~12 POS
極

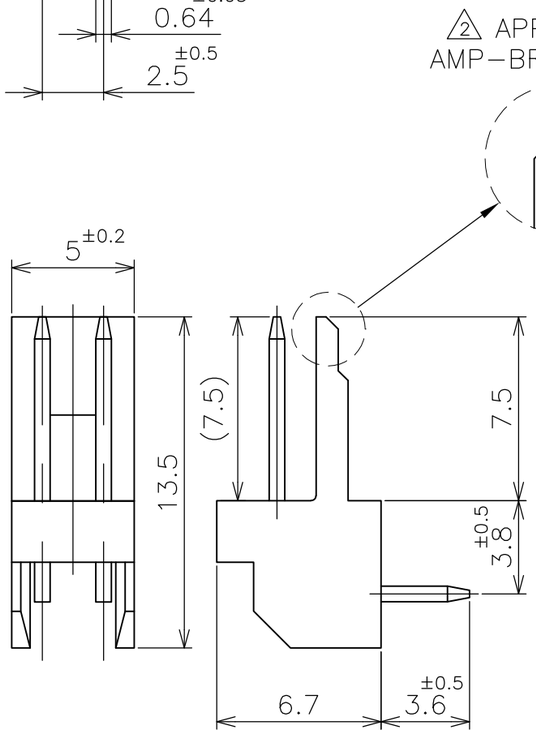

2 POS
極

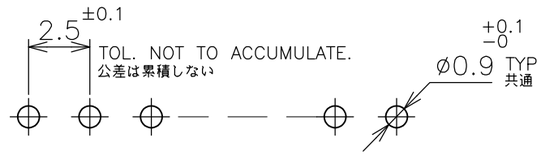

RECOMMENDED BOARD LAYOUT (1.6 THK)
取付基板穴寸法(基板厚1.6t)

C ±0.2	B ±0.5	A	NO OF POS 極数	3 RED 赤色	3 GREEN 緑色	BLUE 青色	BLACK 黒色	NATURAL 自然色
30.0	27.5	11	12	9-171826-2	7-171826-2	5-171826-2	3-171826-2	1-171826-2
25.0	22.5	9	10	9- -0	7- -0	5- -0	3- -0	1- -0
22.5	20.0	8	9	8- -9	6- -9	4- -9	2- -9	-9
20.0	17.5	7	8	8- -8	6- -8	4- -8	2- -8	-8
17.5	15.0	6	7	8- -7	6- -7	4- -7	2- -7	-7
15.0	12.5	5	6	8- -6	6- -6	4- -6	2- -6	-6
12.5	10.0	4	5	8- -5	6- -5	4- -5	2- -5	-5
10.0	7.5	3	4	8- -4	6- -4	4- -4	2- -4	-4
7.5	5.0	2	3	8- -3	6- -3	4- -3	2- -3	-3
図示		—//—	2	8-171826-2	6-171826-2	4-171826-2	2-171826-2	171826-2

PART NUMBER 型番

THIS DRAWING IS A CONTROLLED DOCUMENT.

DIMENSIONS: 単位: 粍 mm

TOLERANCES UNLESS OTHERWISE SPECIFIED: 一般公差

0 PLC	± 0.3
1 PLC	± 0.3
2 PLC	± 0.3
3 PLC	± 0.3
4 PLC	± 0.3
ANGLES	± –

MATERIAL 材料 HSG : 66NYLON –UL94V–0
POST: BRASS

FINISH 仕上
TIN–PLATE 0.8um MIN. ALL OVER
NICKEL 0.5um MIN. UNDERPLATED

DWN T.DOI 14MAY77
CHK H.TAGUCHI 14MAY77
APVD H.TAGUCHI 14MAY77
PRODUCT SPEC 製品規格 —
APPLICATION SPEC 取付適用規格 —
WEIGHT 0

CUSTOMER DRAWING

TE Connectivity

NAME 名称 –
POST HEADER ASSY (H)
EI SERIES CONNECTOR

SIZE	CAGE CODE	DRAWING NO 番号	RESTRICTED TO
A3	00779	C-171826	—

SCALE 尺度 4:1 SHEET 1 OF 1 REV R3