MATERIAL NUMBER	# OF COLUMNS	# OF DIFF PAIR	DIM "A" MAX	DIM "B"	PTH ∅
76500-*8**	8	32	22.80	13.30	0.46±0.05
76500-*1**	10	40	26.60	17.10	0.46±0.05
76500-*6**	16	64	38.00	28.50	0.46±0.05
76500-*8**	8	32	22.80	13.30	0.39±0.05
76500-*1**	10	40	26.60	17.10	0.39±0.05
76500-*6**	16	64	38.00	28.50	0.39±0.05

76500-****

MODULE TYPE
- 5 = RIGHT GUIDED, LEAD-FREE
- 9 = RIGHT GUIDED, LEAD-FREE W/ ENDWALL

OF COLUMNS
- 1 = 10 COLUMNS
- 6 = 16 COLUMNS
- 8 = 8 COLUMNS

KEY ORIENTATION
- 0 = NO KEY
- 1 = A 5 = E
- 2 = B 6 = F
- 3 = C 7 = G
- 4 = D 8 = H

PIN LENGTH (P)
- 4 = 4.90 (0.46 PTH)
- 5 = 5.50 (0.46 PTH)
- 7 = 4.90 (0.39 PTH)
- 8 = 5.50 (0.39 PTH)

NOTES:

1. MATERIALS: HOUSING - LIQUID CRYSTAL POLYMER (LCP), GLASS-FILLED, UL94V-0
   TERMINALS - HIGH PERFORMANCE COPPER ALLOY
2. FINISH: 30µIN SELECTIVE GOLD IN CONTACT AREA, SELECTIVE TIN ON PCB TAILS, NICKEL OVERALL.
3. REFER TO MOLEX PRODUCT SPECIFICATION PS-76060-999 FOR PERFORMANCE SPECIFICATIONS AND ADDITIONAL PCB INFORMATION.
4. EACH SIGNAL WAFER CONTAINS 2 COLUMNS OF TERMINALS.
5. PRODUCT IS PACKAGED PER PK-70873-041.
6. THIS PART CONFORMS TO CLASS B REQUIREMENTS OF COSMETIC SPEC PS-45499-002.7. REFER TO MOLEX SALES DRAWING SD-76160-002 FOR THE MATING RECEPTACLES.
8. REFER TO MOLEX PCB ROUTING GUIDE AS-76060-990 FOR ANTIPAD AND ROUTING RECOMMENDATIONS.
9. WHEN USING MOLEX SUPPLIED #2-32 SCREW 73726-0000 (9.50mm ±0.38 THREADABLE SCREW LENGTH), THE MAXIMUM BOARD THICKNESS IS 4.4mm.
10. GUIDE RIGHT RAM MATES WITH A GUIDE LEFT DAUGHTERCARD.
11. MARKING: LOCATED APPROXIMATELY AS SHOWN. PART NUMBER AND DATE CODE.

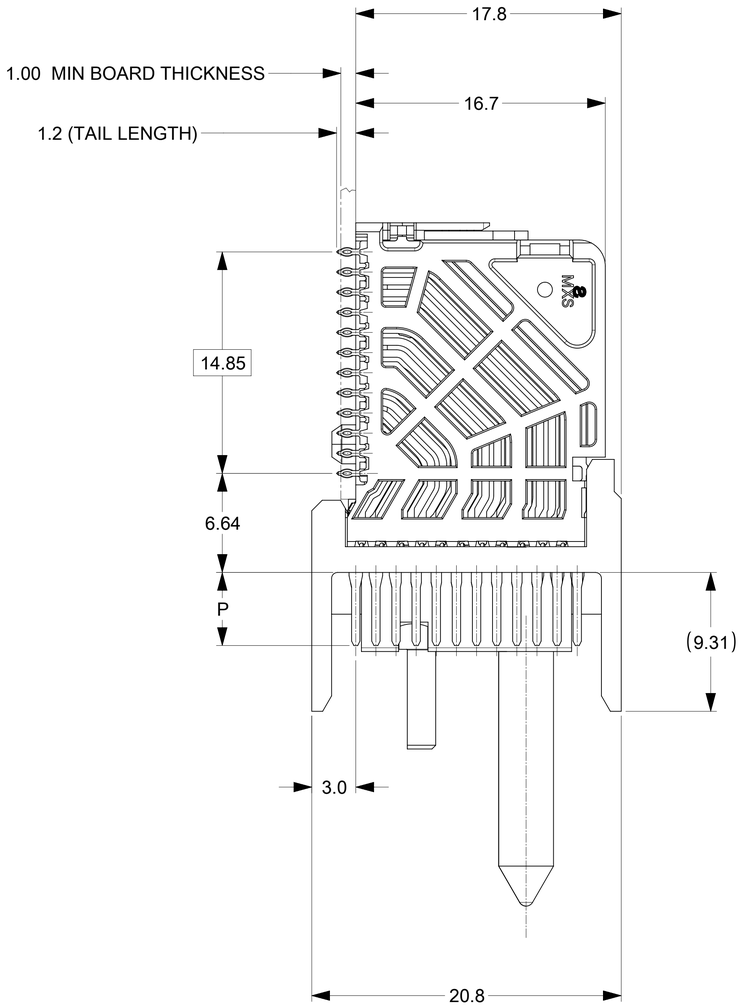

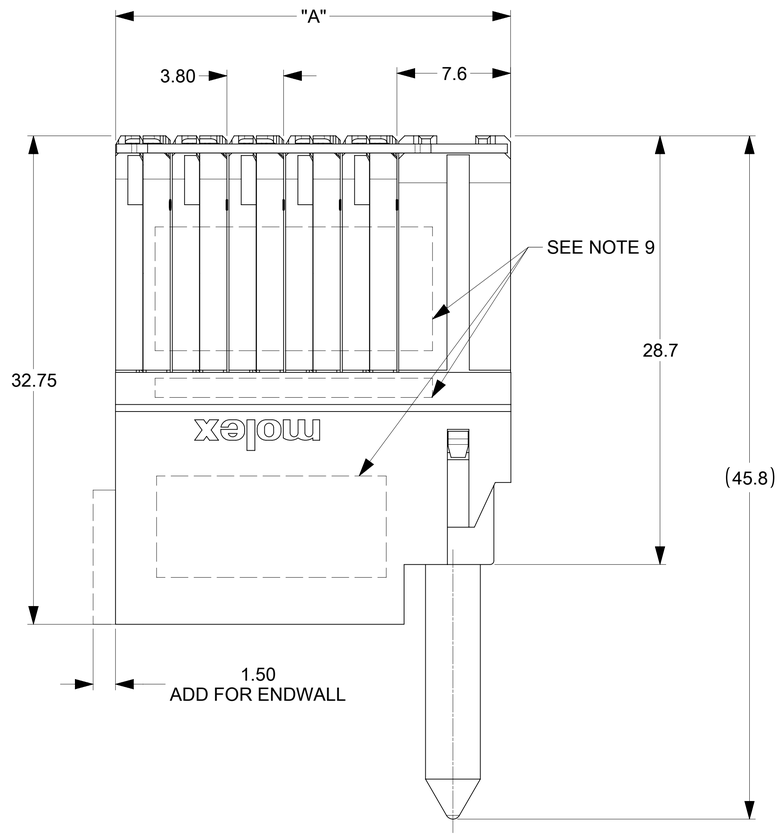

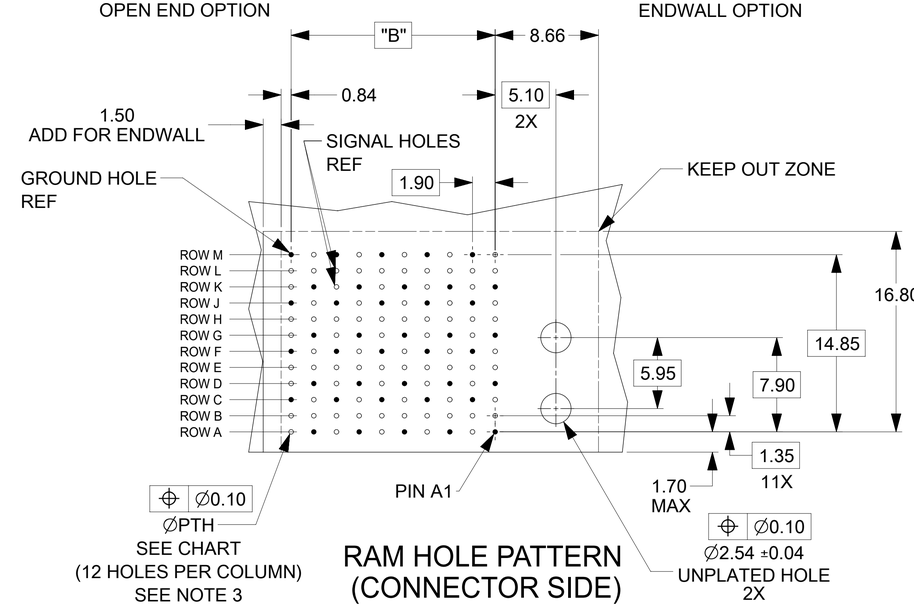

RAM HOLE PATTERN
(CONNECTOR SIDE)

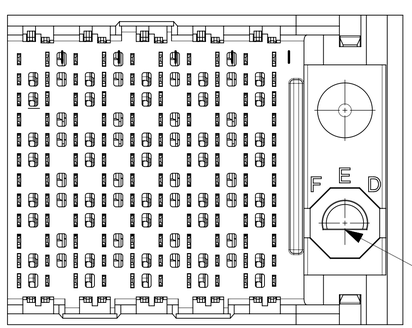

THIS DRAWING CONTAINS INFORMATION THAT IS PROPRIETARY TO MOLEX ELECTRONIC TECHNOLOGIES, LLC AND SHOULD NOT BE USED WITHOUT WRITTEN PERMISSION

DIMENSION UNITS	SCALE
mm	NTS

GENERAL TOLERANCES (UNLESS SPECIFIED)

ANGULAR TOL	±	0.5 °
4 PLACES	±	
3 PLACES	±	
2 PLACES	±	0.13
1 PLACE	±	0.25
0 PLACES	±	

DRAFT WHERE APPLICABLE MUST REMAIN WITHIN DIMENSIONS

CURRENT REV DESC: REMASTERED TO NX

EC NO: 705090
DRWN: DYARAS 2021/12/13
CHK'D: YOGEEB 2022/02/17
APPR: LZENG 2022/05/13

INITIAL REVISION:
DRWN: JQUILES 2009/01/12
APPR: JLAURX 2009/01/13

THIRD ANGLE PROJECTION | DRAWING: D-SIZE | SERIES: 76500

molex

IMPACT 4 PAIR RAM
GUIDE RIGHT SIGNAL MODULE SALES DWG

PRODUCT CUSTOMER DRAWING

DOCUMENT NUMBER	DOC TYPE	DOC PART	REVISION
SD-76500-004	PSD	001	F4

MATERIAL NUMBER	CUSTOMER	SHEET NUMBER
SEE TABLE	GENERAL MARKET	1 OF 2

DOCUMENT STATUS	P1	RELEASE DATE	2022/05/13 03:06:37

TCDRAFT master-to-prod-D
REVISION: 21.1
DATE: 2021-09-01

COPLANAR APPLICATION

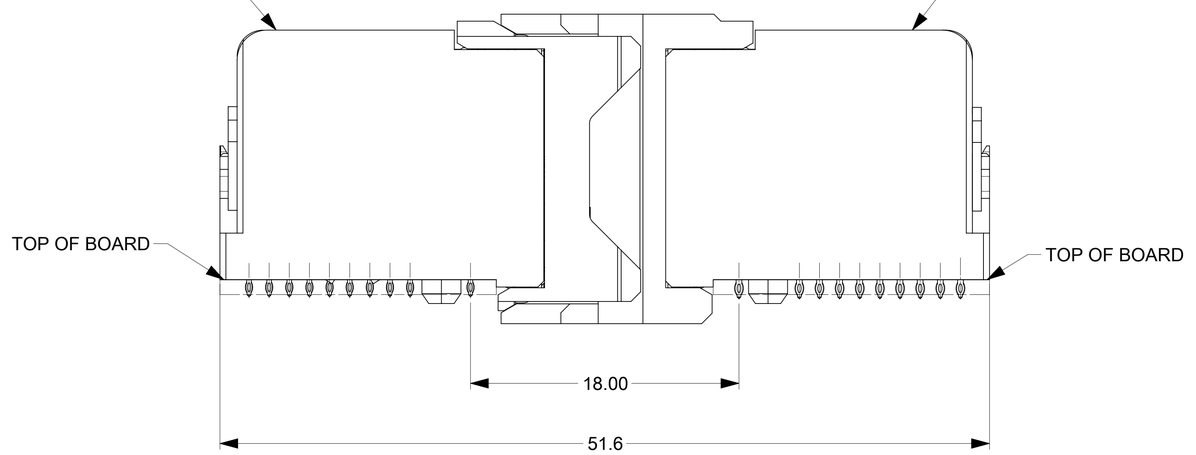

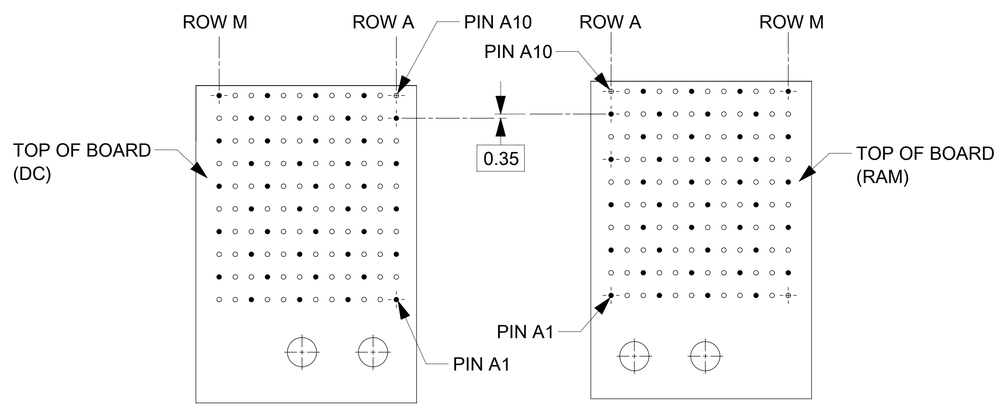

COPLANAR MATED SIGNAL PATHS

DC PIN A10----------RAM PIN A10
| |
| |
DC PIN A1----------RAM PIN A1

THIS DRAWING CONTAINS INFORMATION THAT IS PROPRIETARY TO MOLEX ELECTRONIC TECHNOLOGIES, LLC AND SHOULD NOT BE USED WITHOUT WRITTEN PERMISSION

DIMENSION UNITS	SCALE
mm	NTS

GENERAL TOLERANCES (UNLESS SPECIFIED)

ANGULAR TOL	±	0.5 °
4 PLACES	±	
3 PLACES	±	
2 PLACES	±	0.13
1 PLACE	±	0.25
0 PLACES	±	

DRAFT WHERE APPLICABLE MUST REMAIN WITHIN DIMENSIONS

CURRENT REV DESC: REMASTERED TO NX

EC NO: 705090
DRWN: DYARAS 2021/12/13
CHK'D: YOGEEB 2022/02/17
APPR: LZENG 2022/05/13

INITIAL REVISION:
DRWN: JQUILES 2009/01/12
APPR: JLAURX 2009/01/13

THIRD ANGLE PROJECTION | DRAWING: D-SIZE | SERIES: 76500

molex

IMPACT 4 PAIR RAM
GUIDE RIGHT SIGNAL MODULE SALES DWG

PRODUCT CUSTOMER DRAWING

DOCUMENT NUMBER	DOC TYPE	DOC PART	REVISION
SD-76500-004	PSD	001	F4

MATERIAL NUMBER	CUSTOMER	SHEET NUMBER
SEE TABLE	GENERAL MARKET	2 OF 2

DOCUMENT STATUS	P1	RELEASE DATE	2022/05/13 03:06:37

TCDRAFT master tb-prod-D
REVISION: J1.1
DATE: 2021-05-04