MARKETING SALES DRAWING

Electrical Testing per Tusonix standard test plans and Mil-Std-202 Test Methods.

DIMENSIONS IN INCHES - DO NOT SCALE THIS DRAWING
DIMENSIONS IN METRIC - [ ]

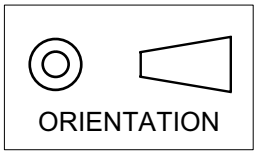

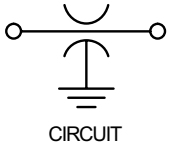

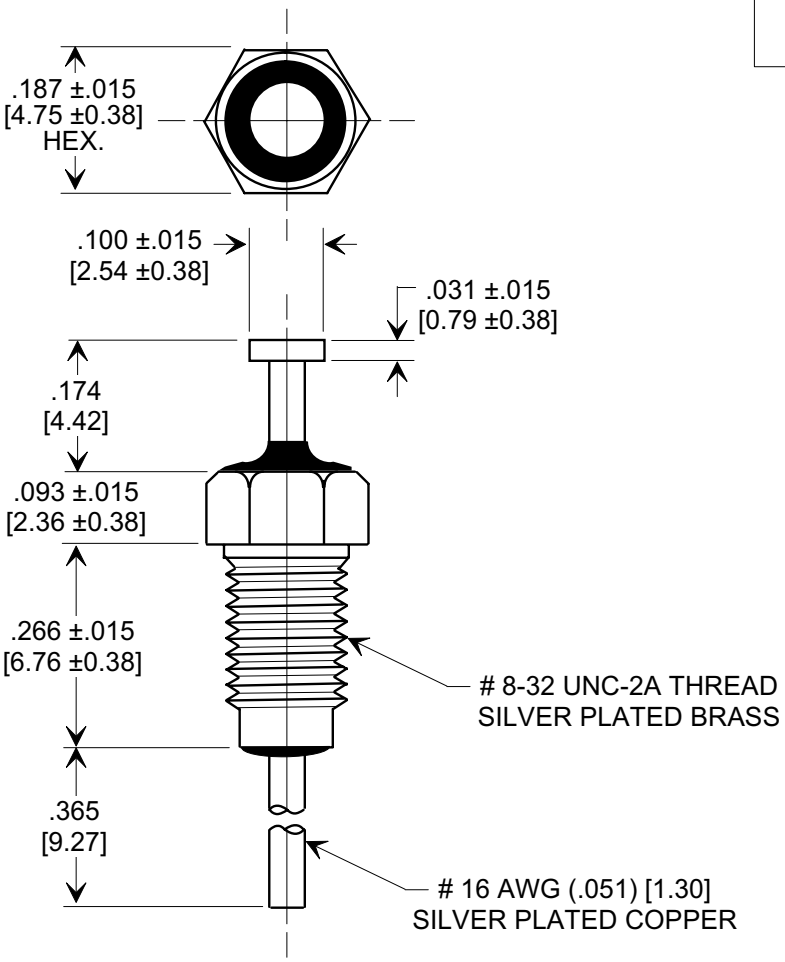

NOTES:
1. SUPPLIED WITH SILVER PLATED HEX NUT AND INTERNAL TOOTH LOCK WASHER.
2. MOUNTING TORQUE NOT TO EXCEED 5 lb - in. MAX. [.565 N-m]
3. TUSONIX STANDARD PART NUMBER: 2425-018-X7R0-102P.
   TUSONIX RoHS COMPLIANT PART NUMBER: 2425-018-X7R0-102P LF.
   CUSTOMER MUST SPECIFY STANDARD OR RoHS PART NUMBER WHEN ORDERING.
4. PART MARKING: STANDARD: BLACK INK FOR TRADEMARK AND CAP. CODE. RoHS PART: GREEN FOR TRADEMARK AND CAP. CODE.

SPECIFICATIONS

Tusonix Style:	2425-018
Capacitance Value:	1000 pF
Capacitance Tolerance:	-0 % +100%
Temp. Characteristic:	X7R
Rating:	200 VDC @ + 85°C / 100 VDC @ +125°C
Current (A):	20
Operating Range:	-55°C TO +125°C
Insulation Resistance:	10,000 megohms (min.) @ +25°C
DWV @ 2 Sec. Min:	600 VDC

REVISION RECORD

0	Original Release C.O. **20040813-3-01**	
1	ADDED NOTES 3 & 4. S.M. 11-01-05	**20051031-1-08**
2	CAPACITANCE TOLERANCE REVISED -0% +100% WAS ±20% L.E. 12-14-05	**20051214-1-01**

--TOLERANCES--
Unless Otherwise Specified

DECIMAL ± .031 [0.79]

ANGLES ±

TUSONIX
TUCSON, ARIZONA

Title **MINIATURE BUSHING FEED-THRU**

Drawn **S.M. 08-13-04**

Approved **B.Mc. 08-13-04**

A **2425-018-X7R0-102P**