DRAWING MADE IN THIRD ANGLE PROJECTION

© COPYRIGHT 1974 BY AMP INCORPORATED, HARRISBURG, PA.
ALL INTERNATIONAL RIGHTS RESERVED. AMP INCORPORATED PRODUCTS COVERED BY U. S. AND FOREIGN PATENTS AND/OR PATENTS PENDING.

LOC	DIST
DF	EO

REVISIONS

P	F	ZONE	LTR	DESCRIPTION	DATE	APPROVED
	✓		0	RELEASED D.S.	7-11-74	DGR
✓	✓		A	ADDED -2 PER ECN H-608	1-20-81	JFS
✓	✓		B	OBSOLETE -2 PER R-2520	1-22-87	
✓	✓		C	REV PER DF4581	5-23-91	

206740-1 1. AS SHOWN.
2. "A" DIM. = 1.185

OBSOLETE -2 SAME AS -1 EXCEPT:
2. "A" DIM. = .800

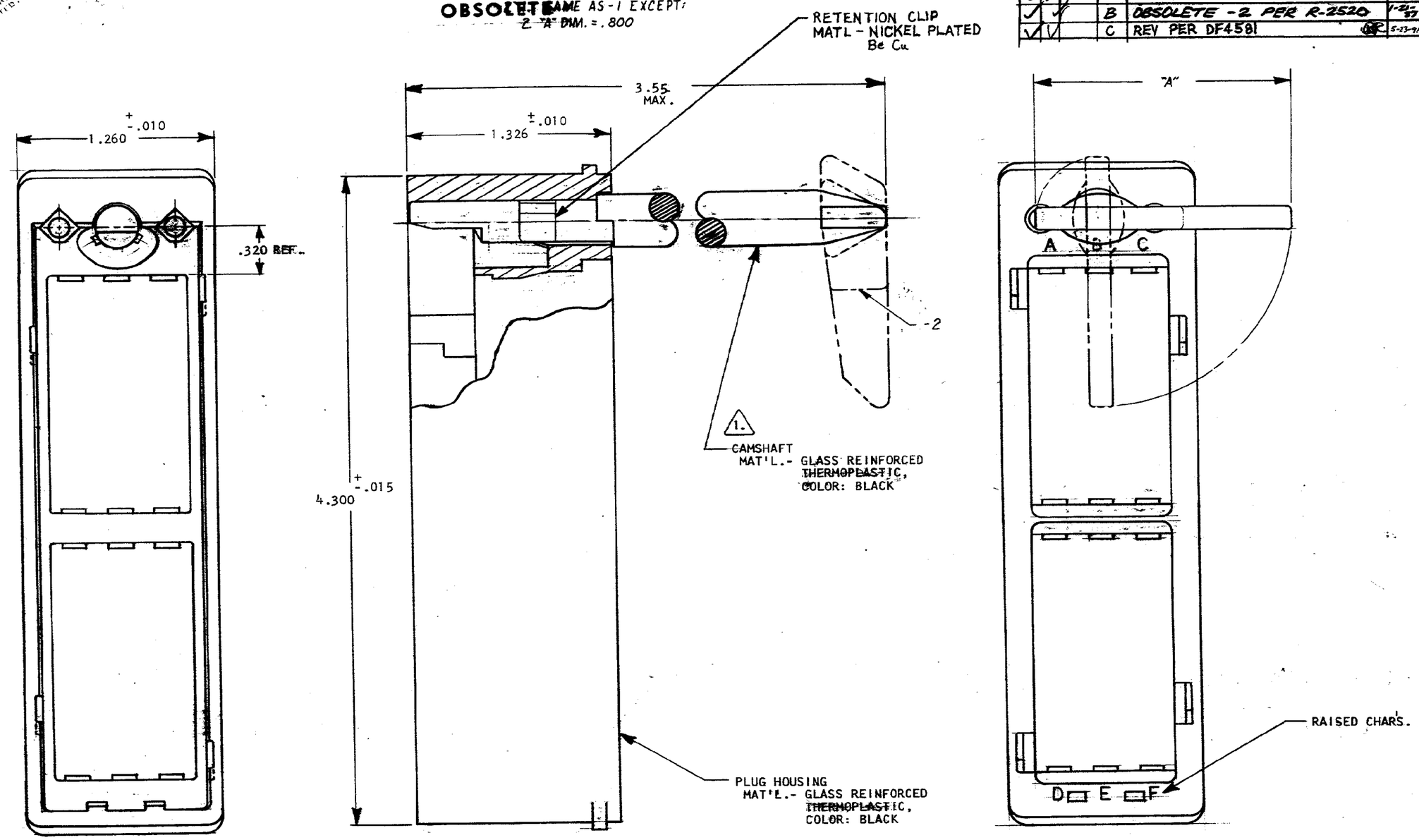

1. CAMSHAFT SHOWN ASSEMBLED, PACKAGED UNASSEMBLED.

UNLESS OTHERWISE SPECIFIED DIMENSIONS ARE IN INCHES. TOLERANCES ON: DECIMALS ± — ANGLES ± —	CONTRACT NO	PART NO
MATERIAL: SEE CALL OUT	DR 7-11-74	AMP INCORPORATED Harrisburg, Pa.
	CHK 7-18-74	NAME PLUG KIT, ZERO ENTRY SIZE II (6, 26 POS. MODULES) SNAP-IN
	APPD 7/18/74	
FINISH —	APPD 7/18/74	SIZE C · CODE IDENT NO 00779 · DRAWING NO 206740
	DSGN APPD	
	OTHER APPD	SCALE — · "CR" SERIES · SHEET 1 OF 1

CUST. 206740

AMP 1471-6 (7-73)

CUSTOMER DRAWING