THIS DRAWING IS UNPUBLISHED. RELEASED FOR PUBLICATION -,- .
© COPYRIGHT - By - ALL RIGHTS RESERVED.

LOC	DIST
AF	50

REVISIONS

P	LTR	DESCRIPTION	DATE	DWN	APVD
	T	REVISED PER ECR-13-005733	28AUG2013	KH	PD

1 CONTINUOUS STRIP ON REEL.

2 REVERSE REEL OF 61441-2.

3 OBSOLETE PARTS: OBSOLETE CIS STREAMLINING PER D.RENAUD/D.SINISI

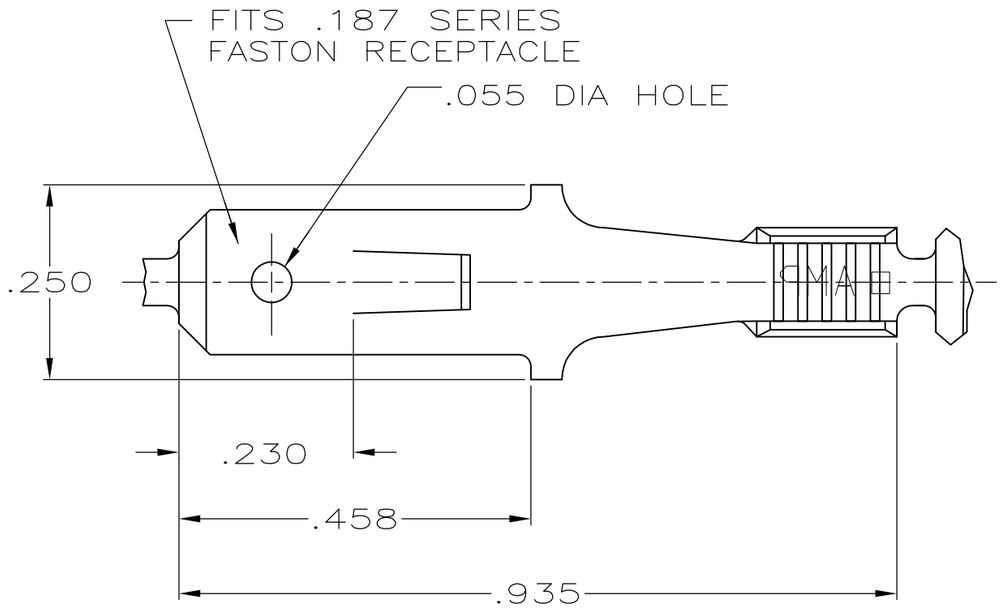

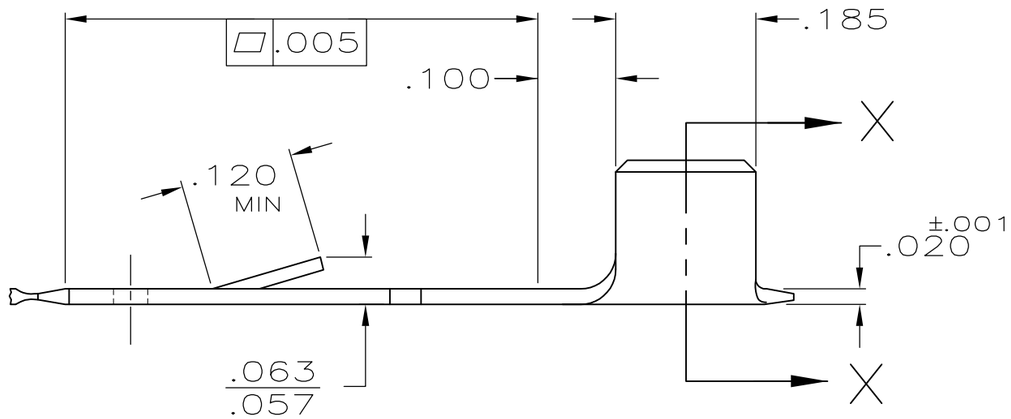

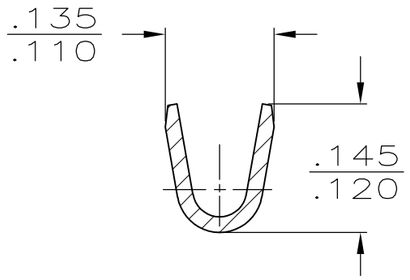

SECTION X-X

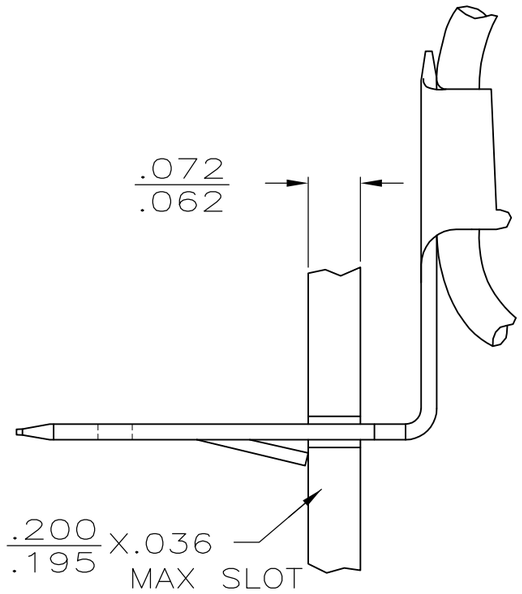

—INSTALLED VIEW—
TO BE BENT BY CUSTOMER

	MAG WIRE SIZE	FINISH	PART NO
3 OBSOLETE	21-16 AWG	-	2 ~~61441-4~~
		TIN	2 61441-3
		TIN	61441-2
SUPERSEDED		PRE-TIN	~~61441-1~~

THIS DRAWING IS A CONTROLLED DOCUMENT.

DIMENSIONS: INCHES

TOLERANCES UNLESS OTHERWISE SPECIFIED:

0 PLC	± -
1 PLC	± -
2 PLC	± -
3 PLC	± .015
4 PLC	± -
ANGLES	± -

MATERIAL: BRASS

FINISH: SEE TABLE

DWN	JR RUTH	1/25/91
CHK	MS FEHER	1/28/91
APVD	C MEYERS	1/28/91
PRODUCT SPEC	—	
APPLICATION SPEC	—	
WEIGHT	—	

TE Connectivity

NAME: TAB, FASTON,™ AMPLIVAR,™ .187 SERIES

SIZE	CAGE CODE	DRAWING NO	RESTRICTED TO
A3	00779	C-61441	—

CUSTOMER DRAWING | SCALE 5:1 | SHEET 1 OF 1 | REV T