THIS DRAWING IS UNPUBLISHED. RELEASED FOR PUBLICATION -,- .
© COPYRIGHT - BY TYCO ELECTRONICS CORPORATION. ALL RIGHTS RESERVED.

LOC	DIST
GP	00

REVISIONS

P	LTR	DESCRIPTION	DATE	DWN	APVD
	J	REVISED PER ECO-10-000073	19FEB2010	CJV	SB

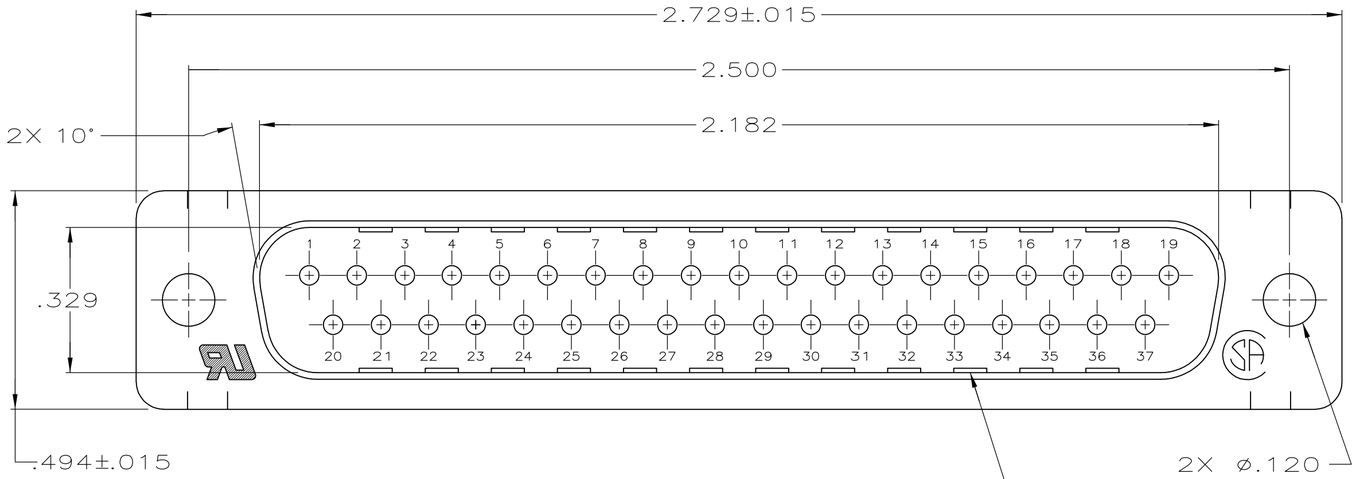

1. NOTE DELETED.

2. MOLDED PARTS: FLAME RETARDANT 94V-0 RATED THERMOPLASTIC; COLOR, BLACK
CONTACT: BRASS
SHELLS: STEEL

3. GOLD FLASH FOR A LENGTH OF .150 MIN FROM MATING END .000100 MIN TIN-LEAD ON OPPOSITE END, ALL OVER 1.27 MIN NICKEL.

4. GOLD PLATED FOR A LENGTH OF .150 FROM MATING END, .000030 MIN GOLD IN MATED AREA, .000100 MIN TIN-LEAD ON OPPOSITE END, ALL OVER .000050 MIN NICKEL.
-OR-
GOLD FLASH OVER PALLADIUM-NICKEL PLATED FOR LENGTH OF .150 MIN FROM MATING END, .000030 MIN TOTAL IN MATED AREA, .000100 MIN TIN-LEAD ON OPPOSITE END, ALL OVER .000050 MIN NICKEL.

5. OBSOLETE.

6. .000200 MIN TIN OVER .000100 MIN COPPER.

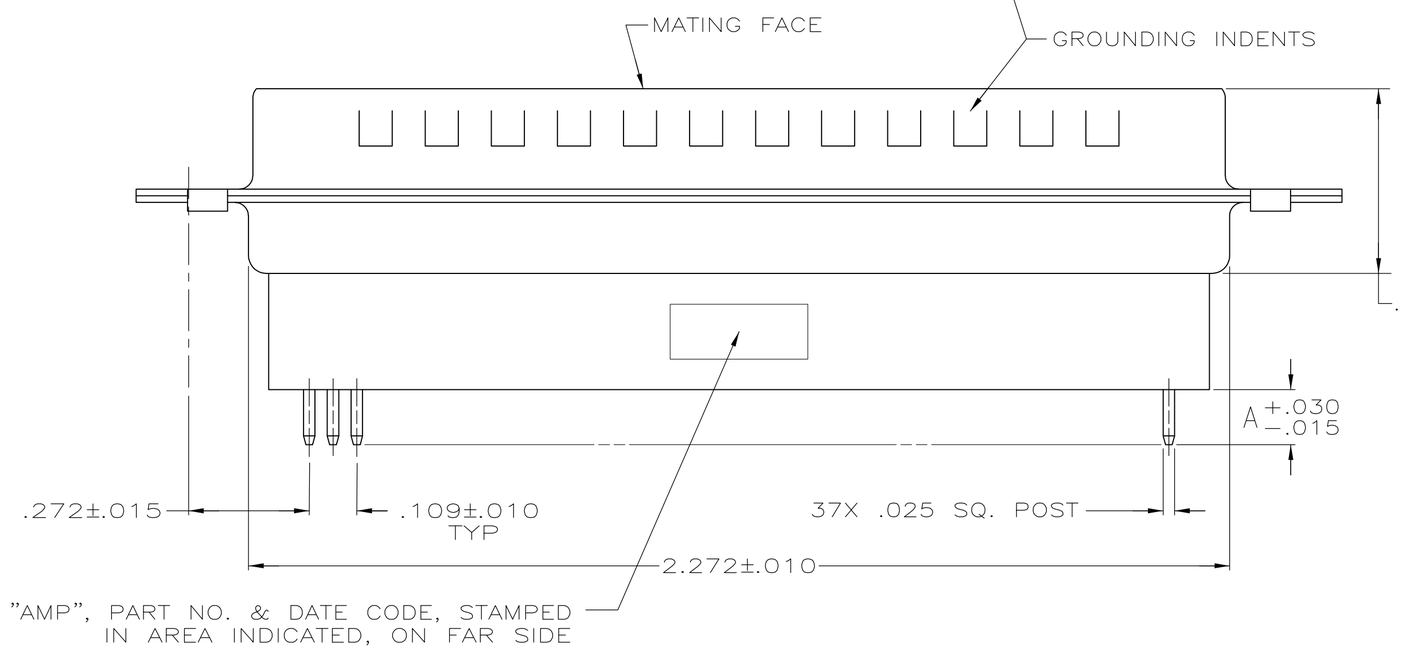

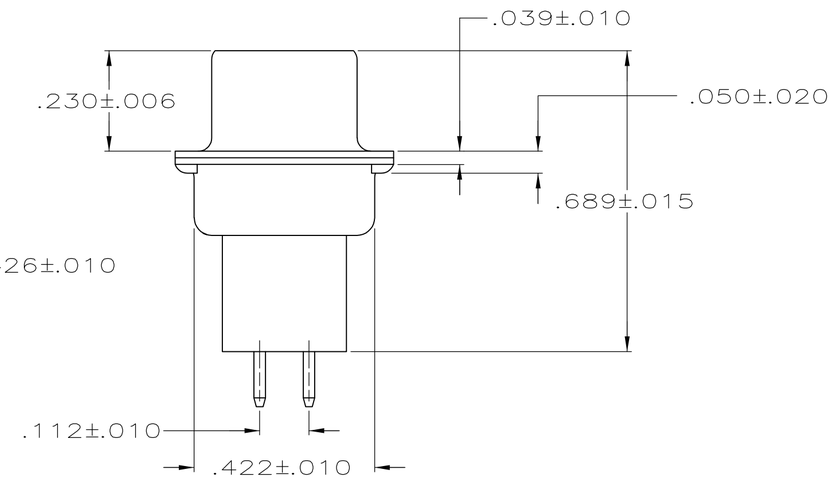

SUPSD BY 745413-1	3	.188	745413-8
SUPSD BY 205714-7	4	.188	745413-7
5	3	.651	745413-6
5	4	.651	745413-5
5	3	.427	745413-4
5	4	.427	745413-3
SUPSD BY 745413-1	3	.125	745413-2
	4	.125	745413-1
	CONTACT FINISH	DIMENSION A	PART NUMBER

P.C. BOARD MOUNTING DIMENSIONS

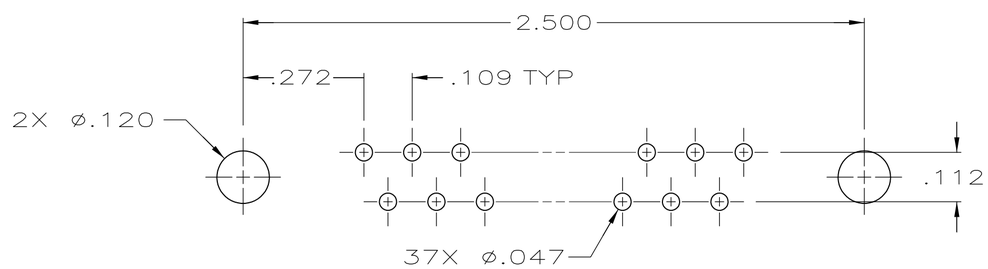

THIS DRAWING IS A CONTROLLED DOCUMENT.

DIMENSIONS: INCHES

TOLERANCES UNLESS OTHERWISE SPECIFIED:
0 PLC ± -
1 PLC ± -
2 PLC ± -
3 PLC ± .005
4 PLC ± -
ANGLES ± 2°

MATERIAL 2

FINISH SHELLS: 6
CONTACTS: SEE TABLE

DWN	J.GERACE	10-25-83
CHK	J.GERACE	10-25-83
APVD	B. TAYLOR	1-04-84
PRODUCT SPEC	108-40025	
APPLICATION SPEC	114-40013	
WEIGHT	-	

Tyco Electronics — Tyco Electronics Corporation, Harrisburg, PA 17105-3608

NAME: PLUG ASSEMBLY, SIZE 4, 37 POSN, VERTICAL, .025 SQ. POSTS, W/ GOUNDING INDENTS, AMPLIMITE™ HDP

SIZE	CAGE CODE	DRAWING NO	RESTRICTED TO
A2	00779	C-745413	-

CUSTOMER DRAWING | SCALE NTS | SHEET 1 OF 1 | REV J

745413