UNIT:mm

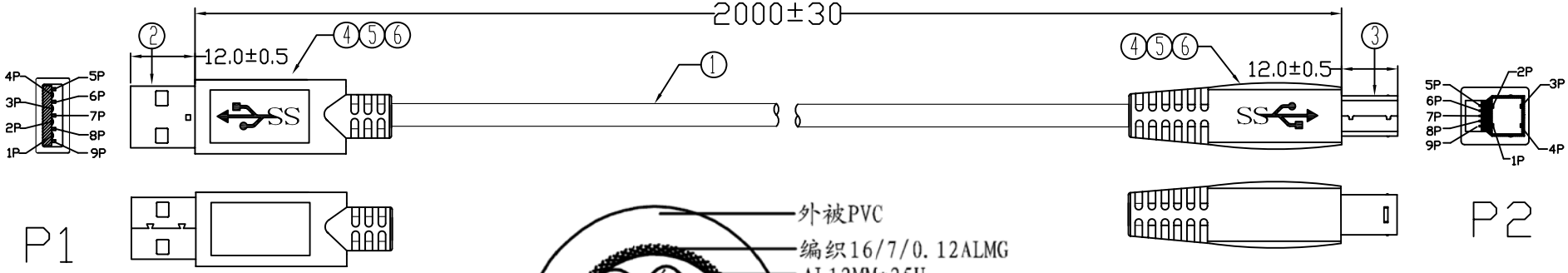




USB3.0 A/M MOLDING TYE
(USB3.0 A/公头 成型式)
OUTER MOLD NO:HJ-CT-179
(模具编号)

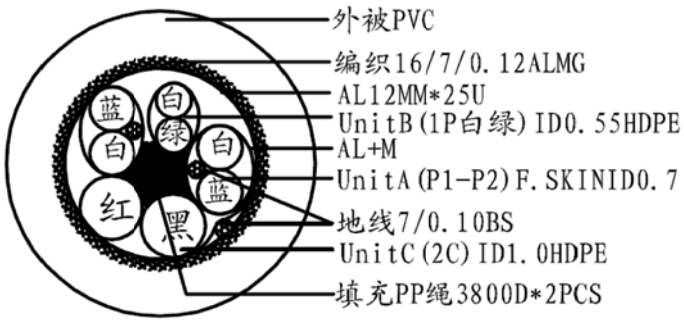


DETAIL A-A



USB3.0 B/M MOLDING TYE
(USB3.0 B/公头 成型式)
OUTER MOLD NO:HJ-CT-180
(模具编号)

Electronic Test:
1.100% Test,(Open,Short,Miss Wire)
2.Contact Resistance:2 ohm max.
3.Insulation Resistance:10M ohm min.
4.Hi-Pot:300V DC/10ms

PIN ASSIGNMENT

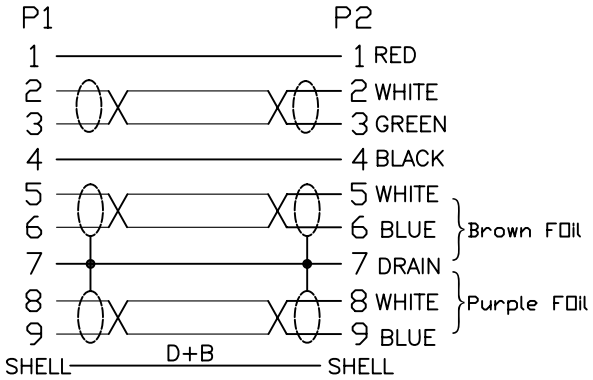


| NO. | NAME | Q'TY | SPECIFICATION |
|---|---|---|---|
| ⑥ | TUBE | 4 | HEAT SHRINK TUBE BLACK OD3.0*L=6mm. |
| ⑤ | TUBE | 2 | HEAT SHRINK TUBE BLACK OD0.8*L=9mm. |
| ④ | OUT JACKET | 25g | OUTER MOLD:45P PVC COLOR:BLACK |
| ③ | CONN | 1 | USB3.0 B MALE TYPE SOLDER TYPE PIN-15U" INSULATION COLOR:BLUE SHELL-NICKEL |
| ② | CONN | 1 | USB3.0 A MALE TYPE SOLDER TYPE PIN-15U" INSULATION COLOR:BLUE SHELL-NICKEL |
| ① | CABLE | 1 | USB3.0 [(30AWG*1P+D+AL+M)*2P+30AWG*1P+24AWG*2C+ADB PVC JACKET:BLACK OD4.8±0.2 |

**CnC Tech, LLC**
Industrial Cable and Connector Technology

| | | | |
|---|---|---|---|
| DRAWED BY | ZHONGHS | DARWING NO. | |
| CHECKED BY | | CUSTOMER | |
| APPROVAL BY | | ITEM NO. | 103-1030-BL-00200 |
| DECIDE BY | | DATE | 2012-02-16 |
| VERSIONS/EDITEON | A/0 | PROJECTION | |