PART NUMBER	ITEM ① BODY	ITEM ② CONTACT	ITEM ③ INSULATOR	ITEM ④ HEX NUT	ITEM ⑤ CRIMP SLEEVE	ITEM ⑥ RETENTION SPRING	ITEM ⑦ END CAP
142-0404-101	BRASS GOLD PL .00001 MIN OVER NICKEL PL .00005 MIN OVER COPPER PL .00005 MIN	BRASS GOLD PL .00003 MIN OVER NICKEL PL .00005 MIN OVER COPPER PL .00005 MIN	TEFLON	BRASS GOLD PL .00001 MIN OVER NICKEL PL .00005 MIN OVER COPPER PL .00005 MIN	COPPER GOLD PL .00001 MIN OVER NICKEL PL .00005 MIN OVER COPPER PL .00005 MIN	BERYLLIUM COPPER UNPLATED	BRASS GOLD PL .00001 MIN OVER NICKEL PL .00005 MIN OVER COPPER PL .00005 MIN
142-0404-106	BRASS NICKEL PL .0001 MIN OVER COPPER PL .00005 MIN	BRASS GOLD PL .00003 MIN OVER NICKEL PL .00005 MIN OVER COPPER PL .00005 MIN	TEFLON	BRASS NICKEL PL .0001 MIN OVER COPPER PL .00005 MIN	COPPER NICKEL PL .0001 MIN OVER COPPER PL .00005 MIN	BERYLLIUM COPPER UNPLATED	BRASS NICKEL PL .0001 MIN OVER COPPER PL .00005 MIN

DRAWING NO.
C - 142-0404-101/110

0	REVISIONS			
ENGINEERING RELEASE				
1	2-2-92	RH		2-11-92 ECO 40868
CHANGED: CABLE STRIP DIMENSION .065+-.010 WAS .062+-.010, .385+-.010 WAS .335+-.010 & .250+-.010 WAS .200+-.010, UPDATED GRAPHICS				
2	12-6-93	RH	IAK	ECO 42111

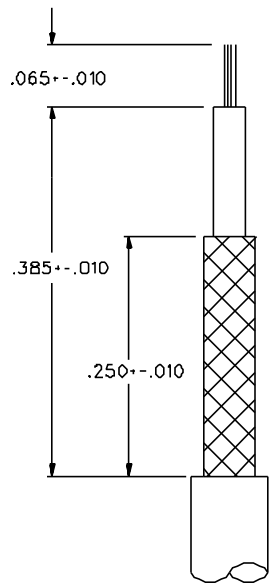

CABLE STRIP DIMENSIONS

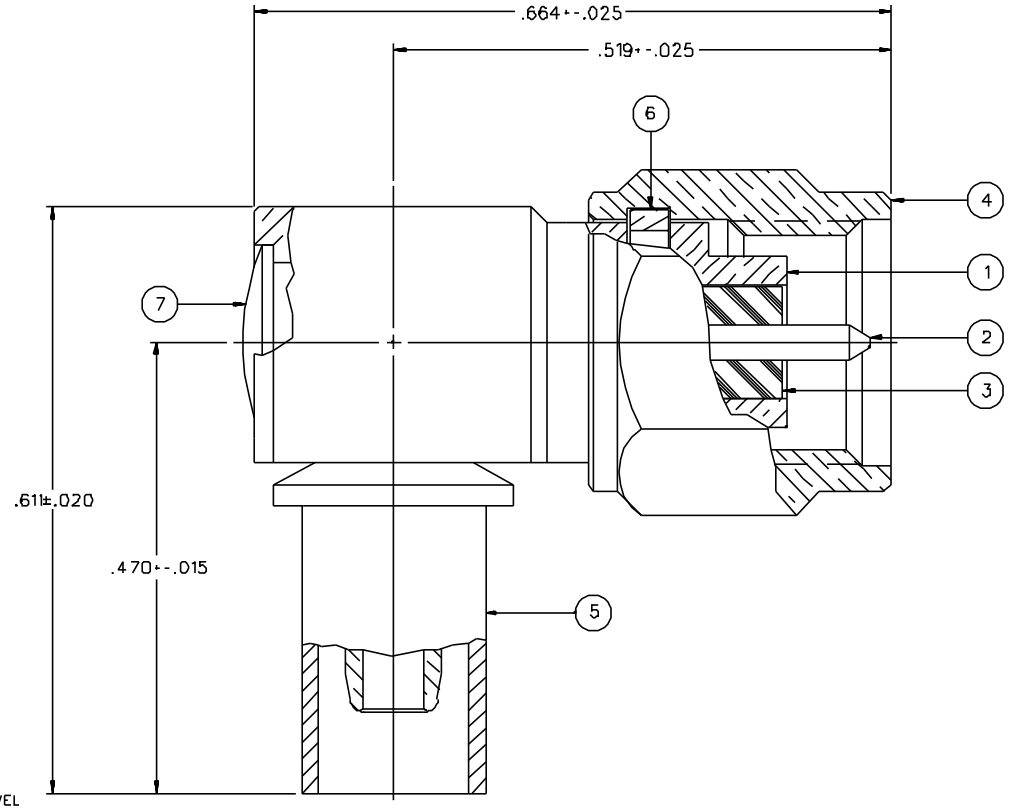

NOTES:

1. SPECIFICATIONS:

IMPEDANCE: 50 OHMS
FREQUENCY RANGE: 0-12.4 GHZ
VSWR: 1.15+.03F MAX (F IN GHZ)
WORKING VOLTAGE: 250 VRMS MAX AT SEA LEVEL
DIELECTRIC WITHSTANDING VOLTAGE: 750 VRMS MIN AT SEA LEVEL
INSULATION RESISTANCE: 5000 MEGOHM MIN
CONTACT RESISTANCE:
CENTER CONTACT - INITIAL 4.0 MILLIOHM MAX, AFTER ENVIRONMENTAL 6.0 MILLIOHM MAX
OUTER CONDUCTOR - INITIAL 2.0 MILLIOHM MAX AFTER ENVIRONMENTAL NOT APPLICABLE
BODY TO CABLE - 0.5 MILLIOHM MAX (GOLD PLATED), 5.0 MILLIOHM MAX (NICKEL PLATED)
CORONA LEVEL: 190 VOLTS MIN AT 70,000 FEET
INSERTION LOSS: .15$\sqrt{F}$ (F IN GHZ) AT 6 GHZ
RF LEAKAGE: -60 DB MIN AT 2.5 GHZ
RF HIGH POTENTIAL WITHSTANDING VOLTAGE: 500 VRMS MIN AT 4 AND 7 MHZ

MECHANICAL:

ENGAGE/DISENGAGE TORQUE: 2 INCH-POUNDS MAX
MATING TORQUE: 7-10 INCH POUNDS
COUPLING PROOF TORQUE: 15 INCH-POUNDS MIN
COUPLING NUT RETENTION: 60 LBS MIN
CONTACT RETENTION: 6 LBS MIN
CABLE ACCEPTABILITY: RG 316/U DOUBLE SHIELDED
RG 188/U DOUBLE SHIELDED
CABLE HEX CRIMP SIZE: .151
CABLE RETENTION: 20 LBS MIN AXIAL FORCE
DURABILITY: 500 CYCLES MIN

ENVIRONMENTAL:

(MEETS OR EXCEEDS THE APPLICABLE PARAGRAPH OF MIL-C-39012)
THERMAL SHOCK: MIL-STD-202, METHOD 107, CONDITION B, EXCEPT +85 DEG C HIGH TEMP
OPERATING TEMPERATURE: -65 DEG C TO 165 DEG C
CORROSION: MIL-STD-202, METHOD 101, CONDITION B
SHOCK: MIL-STD-202, METHOD 213, CONDITION I
VIBRATION: MIL-STD-202, METHOD 204, CONDITION D
MOISTURE RESISTANCE: MIL-STD-202, METHOD 106

CUSTOMER DRAWING

THIS DRAWING TO BE INTERPRETED PER ANSI Y 14.5M - 1982

"μSTATION"

COMPANY CONFIDENTIAL

TOLERANCE UNLESS OTHERWISE SPECIFIED		DRAWN BY RJB	DATE 1-27-92	Johnson Components 299 Johnson Ave. P.O. Box 1732 Waseca, MN 56093-0832	
DECIMALS .XX	mm	CHECKED BY	DATE	TITLE PLUG ASSEMBLY, RA CABLED SMA, RG 316DS	
.XXX		APPROVED BY RJB	DATE 2-3-92		
MATL		APPROVED BY	DATE	CODE NO.	DRAWING NO. C - 142-0404-101/110
FINISH		RELEASE DATE 2-11-92		SCALE 10:1	U/M INCH SHEET 2 OF 2