THIS DRAWING IS UNPUBLISHED. RELEASED FOR PUBLICATION -,- .
© COPYRIGHT - By - ALL RIGHTS RESERVED.

LOC	DIST
AF	50

REVISIONS

P	LTR	DESCRIPTION	DATE	DWN	APVD
	AA	REVISED PER ECR-12-013445	18OCT12	KH	PD

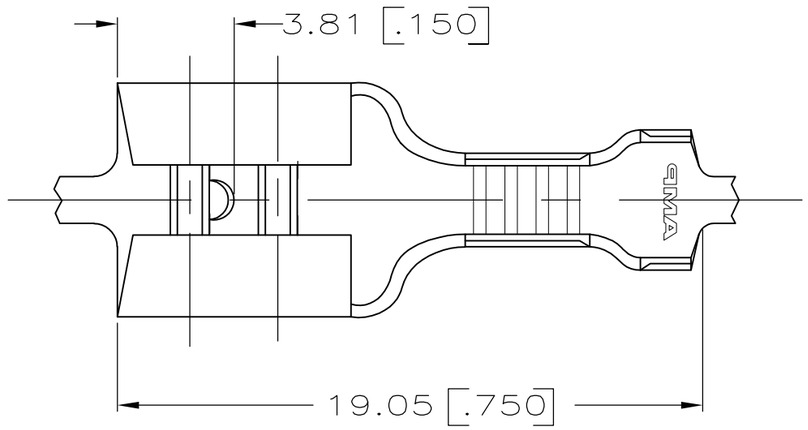

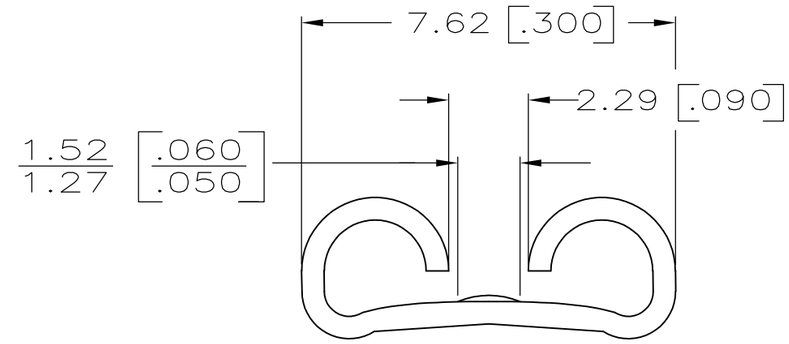

VIEW A–A
SCALE 8:1

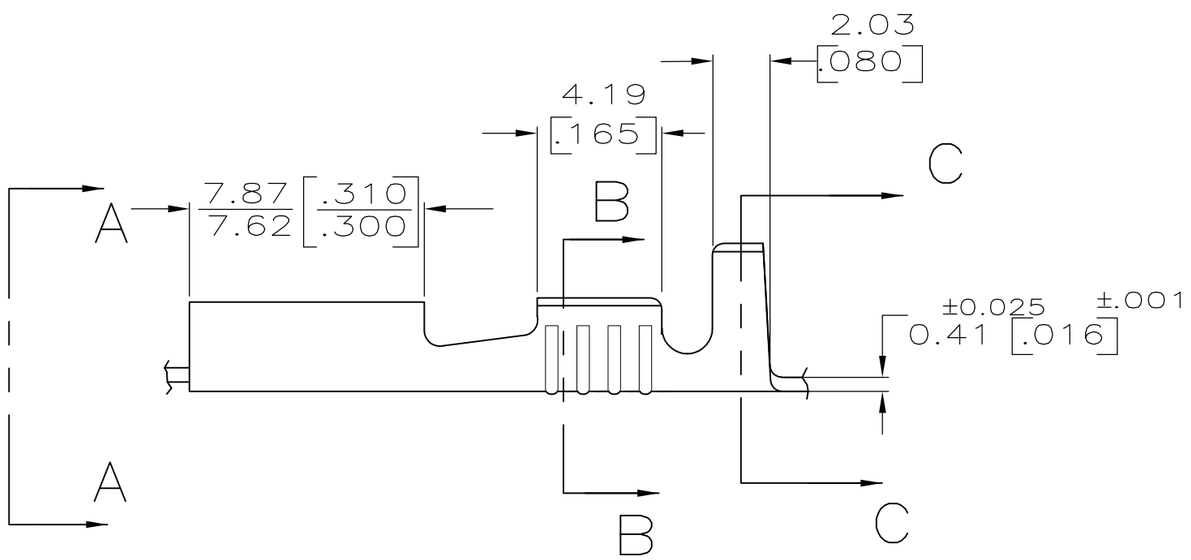

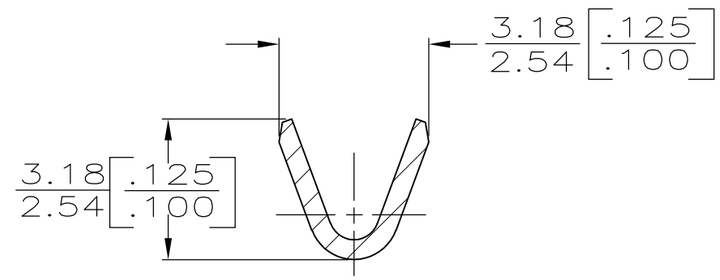

SECTION B–B
SCALE 8:1

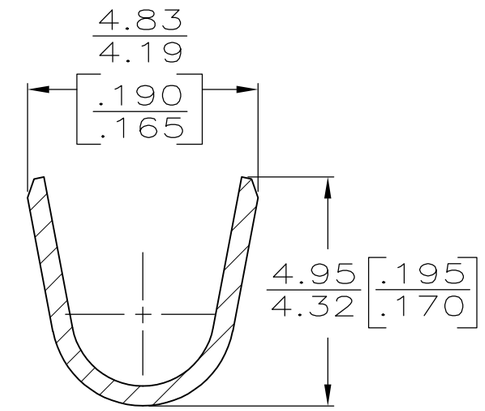

SECTION C–C
SCALE 8:1

1 DIMENSIONS IN BRACKETS ARE IN INCHES

2 CONTINUOUS STRIP ON REELS

3 FOREIGN PRODUCTION ONLY

4 FOREIGN PRODUCTION ONLY, INTERLEAVING PAPER REQUIRED

5 REELED UPSIDE DOWN WITH INTERLEAVING PAPER.

6 PRELIMINARY – NOT FOR PRODUCTION

7 FOR AMP ITALY ONLY, NOT STRESS RELIEVED.

INSUL RANGE	WIRE SIZE	MATING TAB THK	PART NO
2.29–3.30 [.090–.130]	0.3–0.8mm² [22–18]	±0.025 ±.001 0.81 [.032]	7 1-41772-1
			6 5 41772-4
			4 41772-3
			3 41772-1
			41772

THIS DRAWING IS A CONTROLLED DOCUMENT.

DIMENSIONS: mm [INCHES]

TOLERANCES UNLESS OTHERWISE SPECIFIED:
0 PLC ± –
1 PLC ± –
2 PLC ± –
3 PLC ± 0.25 [.010]
4 PLC ± –
ANGLES ± –

MATERIAL: BRASS
FINISH: TIN

DWN	JR RUTH	4/26/89
CHK	MS FEHER	4/26/89
APVD	C MEYERS	4/26/89
PRODUCT SPEC	–	
APPLICATION SPEC	114-2036	
WEIGHT	–	

TE Connectivity

NAME: RECEPTACLE, FASTON,™ .250 SERIES

SIZE	CAGE CODE	DRAWING NO	RESTRICTED TO
A3	00779	C-41772	–

CUSTOMER DRAWING | SCALE 5:1 | SHEET 1 OF 1 | REV AA