THIS DRAWING IS UNPUBLISHED. RELEASED FOR PUBLICATION
© COPYRIGHT 2011 BY TYCO ELECTRONICS CORPORATION. ALL RIGHTS RESERVED.

LOC	DIST
DW	—

REVISIONS

P	LTR	DESCRIPTION	DATE	DWN	APVD
	C	(ECR-10-024779, IMPROVE 2041003-1 HSG STRUCTURE AND ADD PN 1-2041003-1)	11JAN'11	E.L.	W.K.

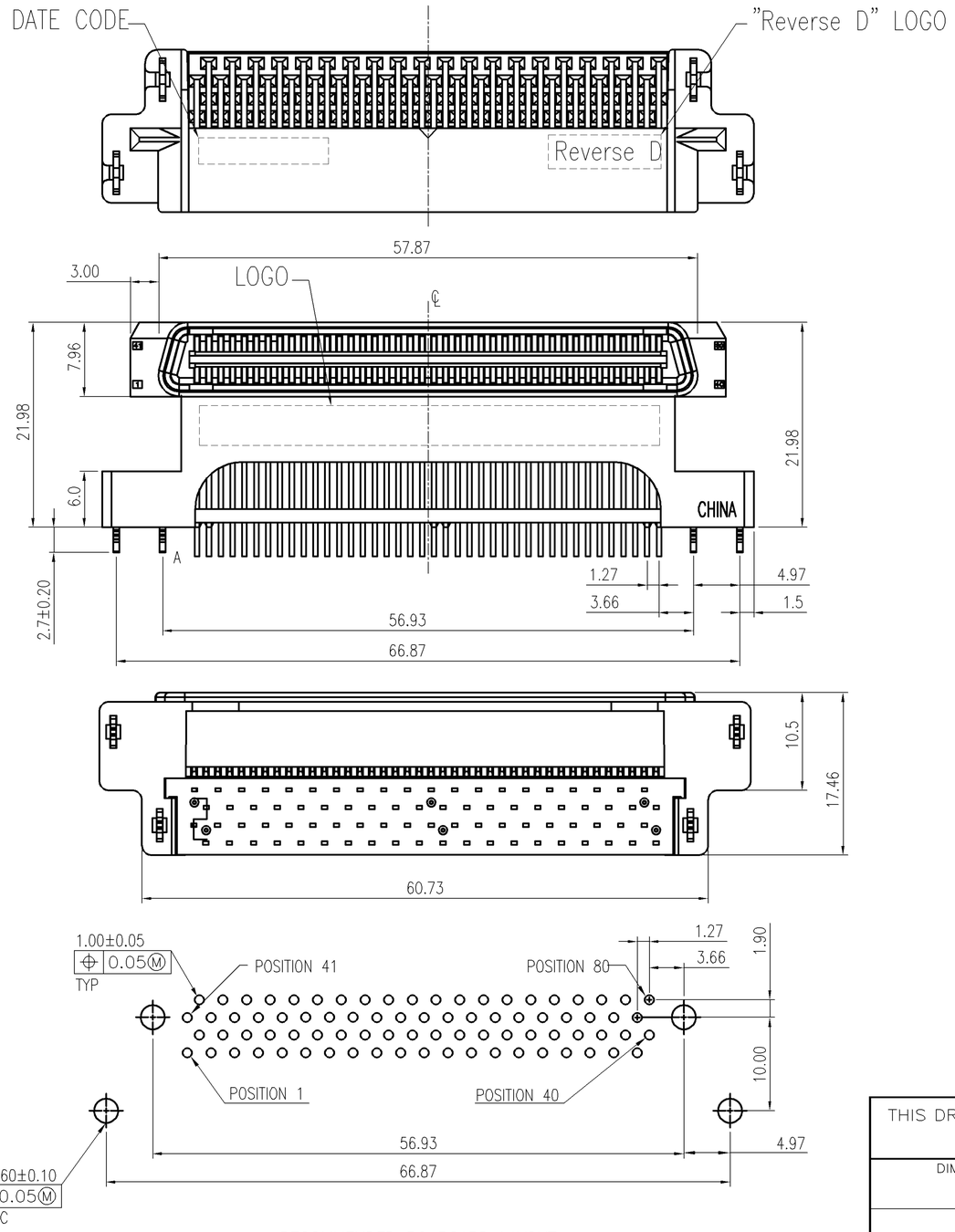

RECOMMENDED PC BOARD LAYOUT
VIEWED FROM CONNECTOR SIDE

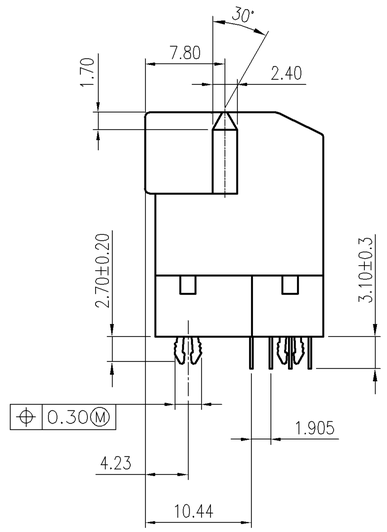

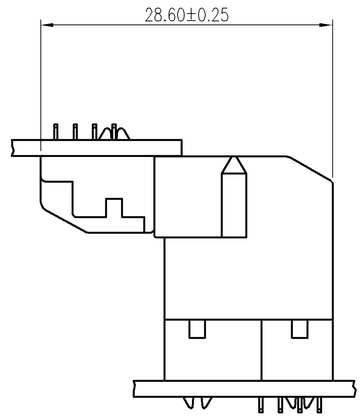

RIGHT ANGLE PLUG ASSEMBLY MATED
WITH RIGHT ANGLE RECEPTACLE ASSEMBLY

NOTE:

1. MATERIAL:
   HOUSING: LCP, UL 94V-0, COLOR: BLACK.
   CONTACT: PHOSPHOR BRONZE, THICKNESS=0.30mm.
   RETENTION LEGS: BRASS, THICKNESS=0.50mm.
2. FINISH:
   CONTACT: GOLD FLASH OVER
   0.762um [30u"] MIN. PALLADIUM-NICKEL PLATED ON CONTACT AREA,
   3.8um [150u"] MIN. MATTE TIN PLATED ON SOLDER TAILS,
   1.27um [50u"] MIN. NICKEL UNDERPLATED ALL OVER.
   RETENTION LEGS: 3.8um [150u"] MIN. TIN-CU PLATED OVER
   1.27um [50u"] MIN. NICKEL PLATED.
3. AIWAYS RoHS/ELV COMPLIANT
4. WAVE SOLDER CAPABLE TO 265°C PER TE SPEC 109-202, CONDITION B.

REVERSED	1734375-1
INTERFACE	PART NUMBER

THIS DRAWING IS A CONTROLLED DOCUMENT.

DIMENSIONS: mm

TOLERANCES UNLESS OTHERWISE SPECIFIED:

0 PLC	± 0.38
1 PLC	± 0.25
2 PLC	± 0.13
3 PLC	± 0.05
4 PLC	± –
ANGLES	± 3°

MATERIAL: SEE NOTE

FINISH: SEE NOTE

DWN	O. HU	24OCT2006
CHK	S. HOU	24OCT2006
APVD	W.J. KE	24OCT2006
PRODUCT SPEC	108-57876	
APPLICATION SPEC	—	
WEIGHT	—	

TE Connectivity

NAME: CHAMP 1.27, SERIES I, PLUG, ASS'Y, R/A, EXTENDED HEIGHT

SIZE	CAGE CODE	DRAWING NO	RESTRICTED TO
A3	00779	C-1734375	—

CUSTOMER DRAWING | SCALE — | SHEET 1 OF 3 | REV C

1470-19 (1/08)

THIS DRAWING IS UNPUBLISHED. RELEASED FOR PUBLICATION
© COPYRIGHT 2011 BY TYCO ELECTRONICS CORPORATION. ALL RIGHTS RESERVED.

LOC	DIST
DW	—

REVISIONS

P	LTR	DESCRIPTION	DATE	DWN	APVD
		SEE SHEET 1.			

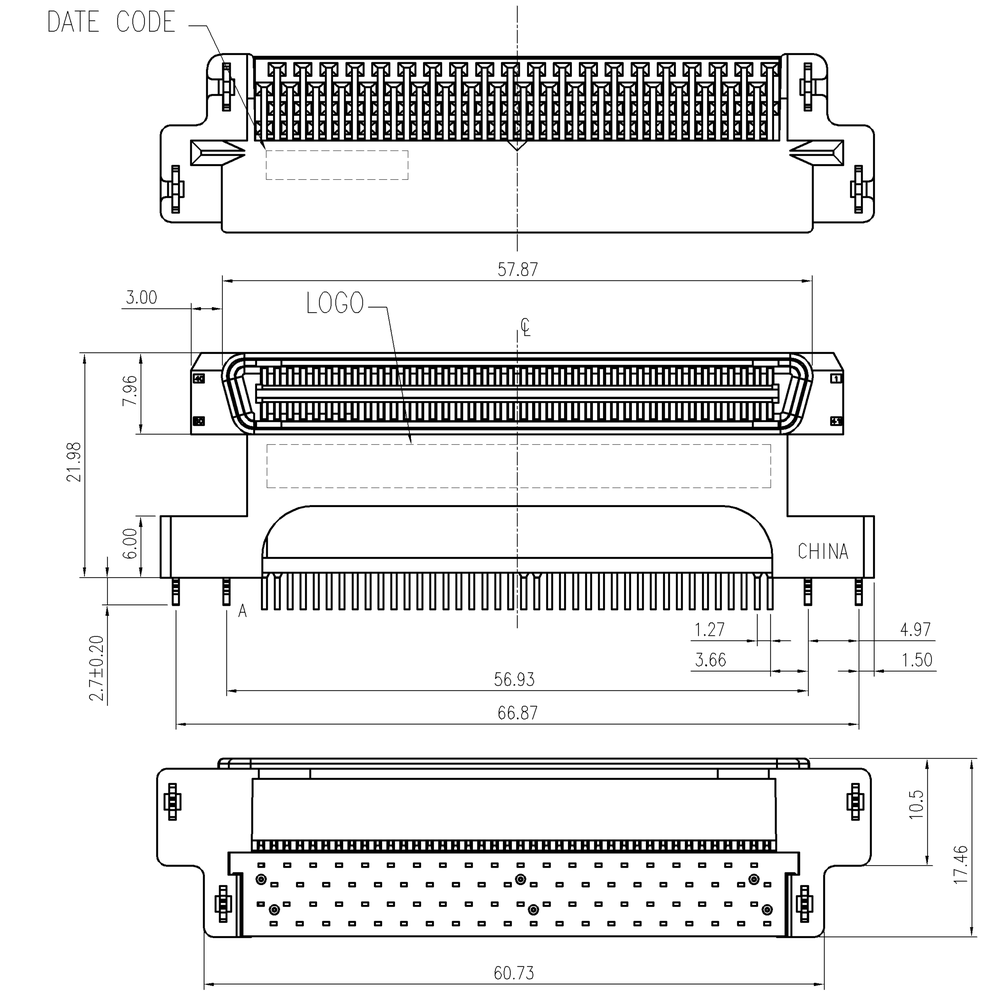

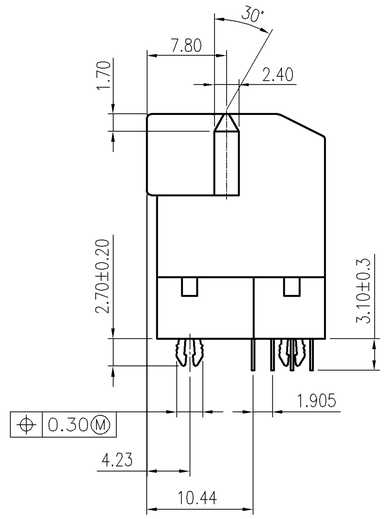

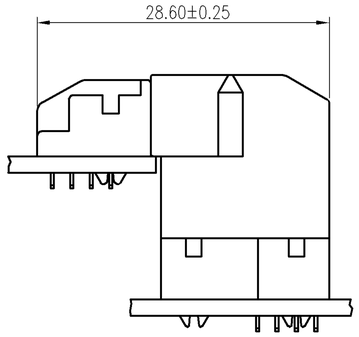

RIGHT ANGLE PLUG ASSEMBLY MATED
WITH RIGHT ANGLE RECEPTACLE ASSEMBLY

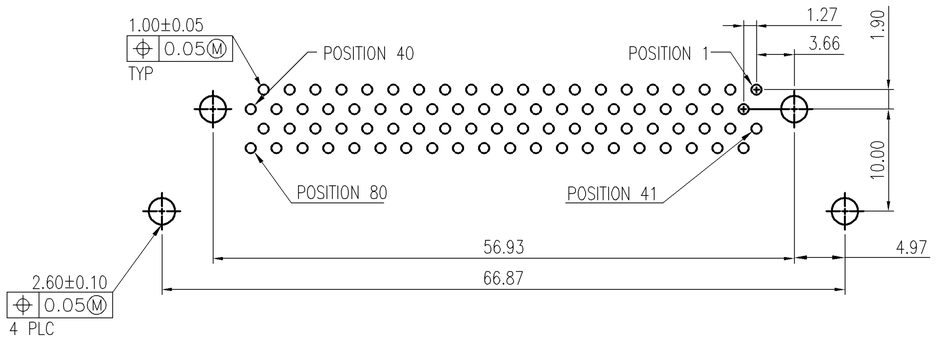

RECOMMENDED PC BOARD LAYOUT
VIEWED FROM CONNECTOR SIDE

NORMAL	1-1734375-1
INTERFACE	PART NUMBER

THIS DRAWING IS A CONTROLLED DOCUMENT.

DIMENSIONS: mm

TOLERANCES UNLESS OTHERWISE SPECIFIED:

0 PLC	± 0.38
1 PLC	± 0.25
2 PLC	± 0.13
3 PLC	± 0.05
4 PLC	± –
ANGLES	± 3°

MATERIAL –

FINISH –

DWN –
CHK –
APVD –
PRODUCT SPEC –
APPLICATION SPEC –
WEIGHT –

TE Connectivity

NAME
CHAMP 1.27, SERIES I, PLUG,
ASS'Y, R/A, EXTENDED HEIGHT

SIZE	CAGE CODE	DRAWING NO	RESTRICTED TO
A3	00779	C-1734375	—

CUSTOMER DRAWING | SCALE — | SHEET 2 OF 3 | REV C

THIS DRAWING IS UNPUBLISHED. RELEASED FOR PUBLICATION
© COPYRIGHT 2011 BY TYCO ELECTRONICS CORPORATION. ALL RIGHTS RESERVED.

LOC	DIST
DW	—

REVISIONS

P	LTR	DESCRIPTION	DATE	DWN	APVD
		SEE SHEET 1.			

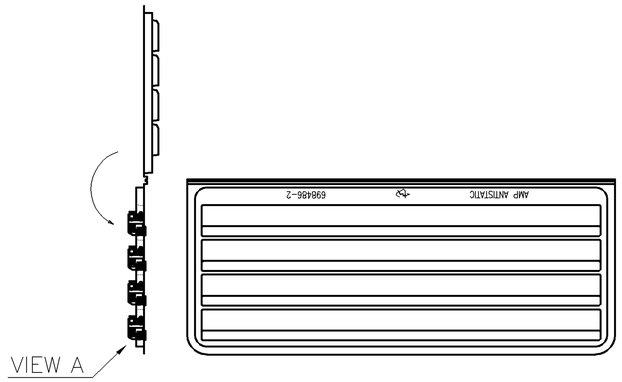

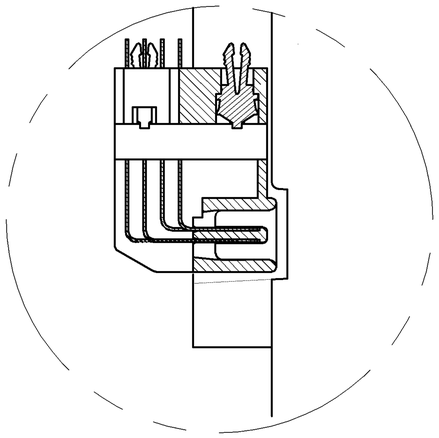

VIEW A

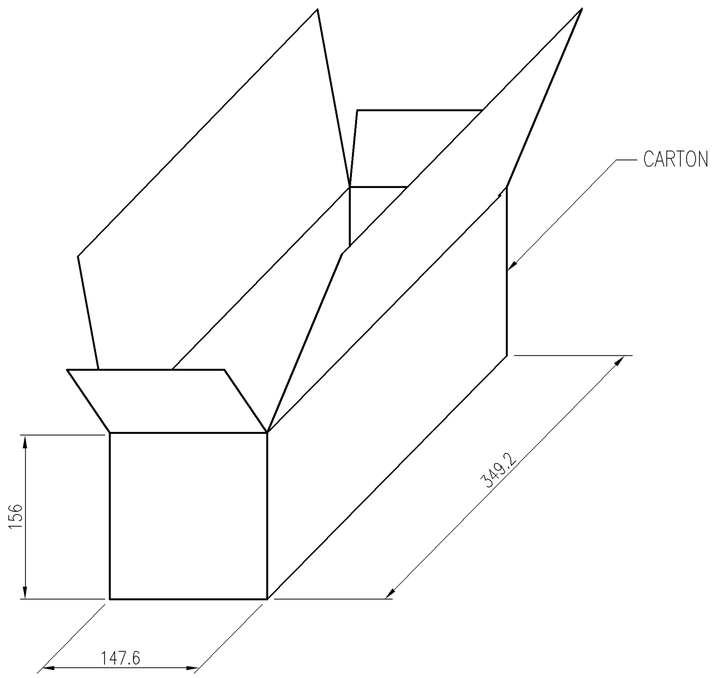

2.46	1.46	128	8	16	1–1734375–1
					1734375–1
G.W(KGS)	N.W(KGS)	PACKAGING QUANTITY/BOX	TRAY/BOX	PCS/TRAY	PART NUMBER

THIS DRAWING IS A CONTROLLED DOCUMENT.

DIMENSIONS: mm

TOLERANCES UNLESS OTHERWISE SPECIFIED:

0 PLC	± –
1 PLC	± –
2 PLC	± –
3 PLC	± –
4 PLC	± –
ANGLES	± –

MATERIAL –

FINISH –

DWN –
CHK –
APVD –
PRODUCT SPEC –
APPLICATION SPEC –
WEIGHT –

TE Connectivity

NAME

CHAMP 1.27, SERIES I, PLUG, ASS'Y, R/A, EXTENDED HEIGHT

SIZE	CAGE CODE	DRAWING NO	RESTRICTED TO
A3	00779	C–1734375	—

CUSTOMER DRAWING

SCALE — SHEET 3 OF 3 REV C