REVISIONS		
ISS	ZONE	DESCRIPTION\PER REQUEST\DATE
A2	A-2	NO.1 WAS CHANGED\N/A\10-29-02'

REMARK: 1. AFTER FORM OVER, CENTER CONTACT SHALL NOT ROTATE RELATIVE TO BODY A TORQUE OF 4 IN-OZ.
(全周成型後，中心針與主體間須能承受 4 IN-OZ 的扭力)
2. INSULATOR MUST WITHSTAND AN 8 LB PUSH-OUT FORCE FROM BODY.
(絕緣體與主體間需能承受 8 LB 的推力)

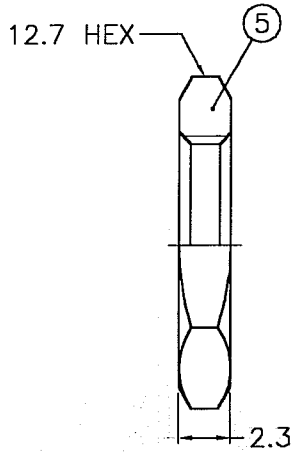

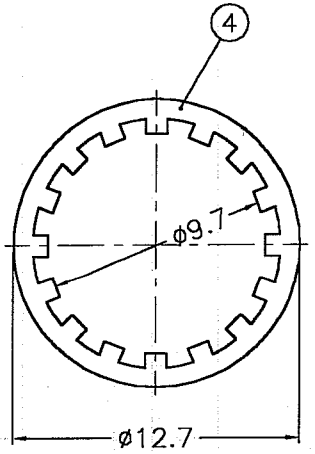

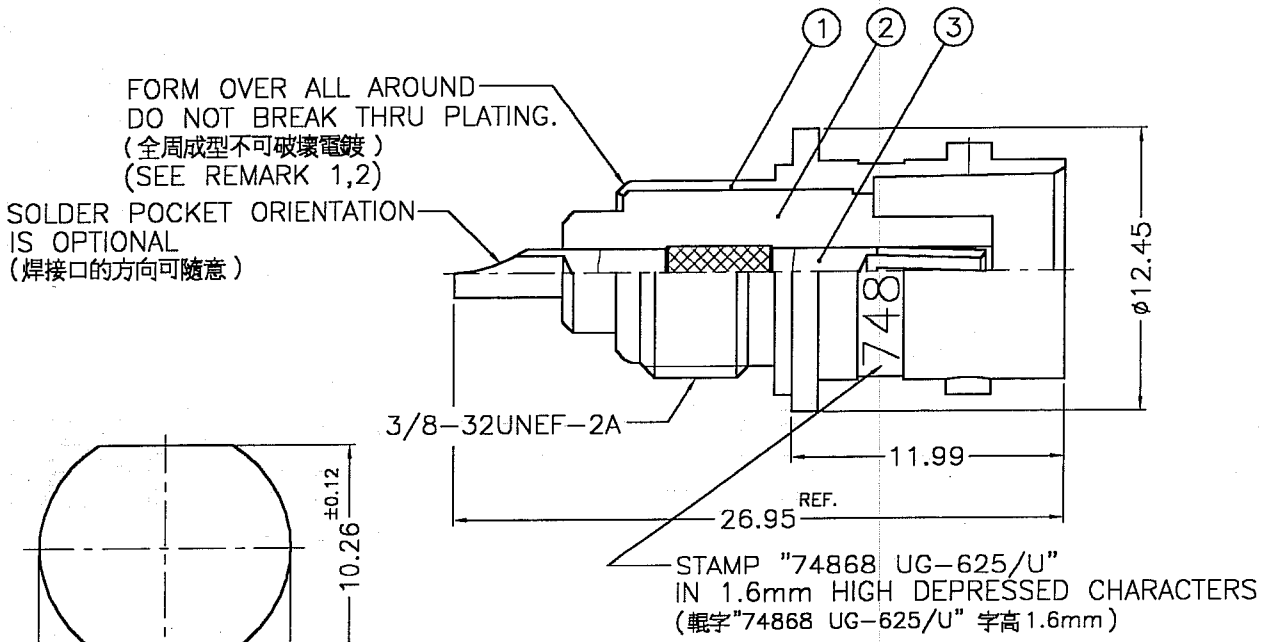

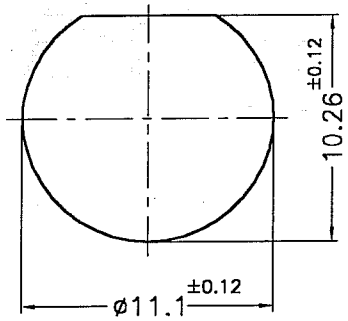

RECOMMENDED
MOUNTING HOLE
(建議架設孔)

1. MAX. PANEL THICKNESS=3.96mm

NOTES: FINISH (PLATING THICKNESS IN MICRO-INCHES)
1. BRASS PER QQ-B-626
2. NICKEL PL. 100 MIN. THICK OVER COPPER STRIKE
3. BERYLLIUM COPPER PER QQ-B-530
4. SILVER PL. 200 MIN. THICK OVER COPPER STRIKE
5. TEFLON MIL-P-19468
6. PHOSPHOR BRONZE PER QQ-B-750

NO.	DESCRIPTION	MATERIAL	FINISH	Q'TY	DRAWING NO.
5	HEX NUT	NOTE 1	NOTE 2	1	HN127-3/8-32X23
4	LOCK WASHER	NOTE 6	NOTE 2	1	LW-127/97X05PB
3	CONTACT PIN	NOTE 3	NOTE 4	1	31-10124
2	INSULATOR	NOTE 5	NATURAL	1	31-10125-1
1	BODY	NOTE 1	NOTE 2	1	31-1391

DIMENSIONS ARE IN MILLIMETERS

UNLESS OTHERWISE SPECIFIED TOLERANCES
0.5-6 = ±0.2
6-30 = ±0.4
30-120 = ±0.6
120-315 = ±1
315-1000 = ±1.6
1000-2000 = ±2.4

SCALE	3/1	ISSUE	A2

PART NO.
APPROVED Tony DATE 10-30-02'
CHECKED Roeser DATE 10-30-02'
DRAWN Richard DATE 10-30-02'
FILE NO. F:\DWG\CNPD\5575SZ

Amphenol
Danbury,CT,USA-Tainan,Taiwan-Shenzhen,China

TITLE BNC BULKHEAD RECEPT. JACK FRONT MOUNT (FOR UG-625/U)

DRAWING NO. 5575

ITEM NO. 5575