THIS DRAWING IS UNPUBLISHED. RELEASED FOR PUBLICATION -,- .
© COPYRIGHT - BY TYCO ELECTRONICS CORPORATION. ALL RIGHTS RESERVED.

LOC	DIST
CM	0

REVISIONS

P	LTR	DESCRIPTION	DATE	DWN	APVD
	R	ECO-07-012898	27JUN07	KW	DB
	R1	REVISED PER ECO-09-021510	16SEP09	KK	AEG

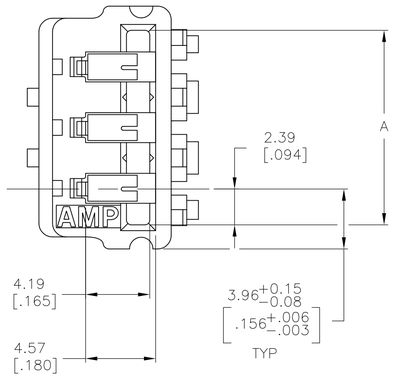

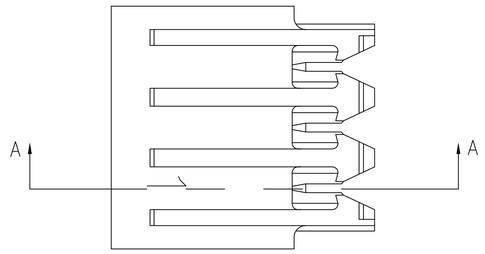

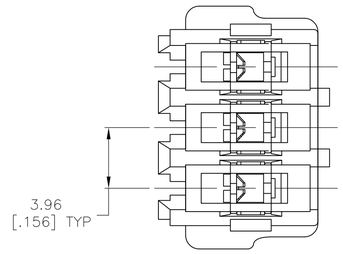

1. MATERIAL:
   CONNECTOR: POLYESTER UL94V-0 (YELLOW).
   CONTACTS: 0.30[.012] THK COPPER ALLOY.
2. CONTACT ACCEPT #20 AWG WIRE WITH 2.41[.095] MAXIMUM INSULATION DIAMETER.
3. CONNECTOR MATES WITH 1.57±0.20[.062±.008] THICK PC BOARD.
4. HOUSING FEATURES: FEED-THRU, STANDARD MOUTH WITHOUT MOUNTING EARS.
5. (5) CONTACT FINISH: BRIGHT TIN-LEAD 0.00203[.000080] MIN THK.
6. (6) CONTACT FINISH: MATTE WHISKER MITIGATED TIN 0.00203[.000080] MIN THICKNESS OVER NICKEL UNDERPLATE.
7. (7) OBSOLETE PARTS: OBSOLETE CIS STREAMLINING PER D.RENAUD/D.SINISI

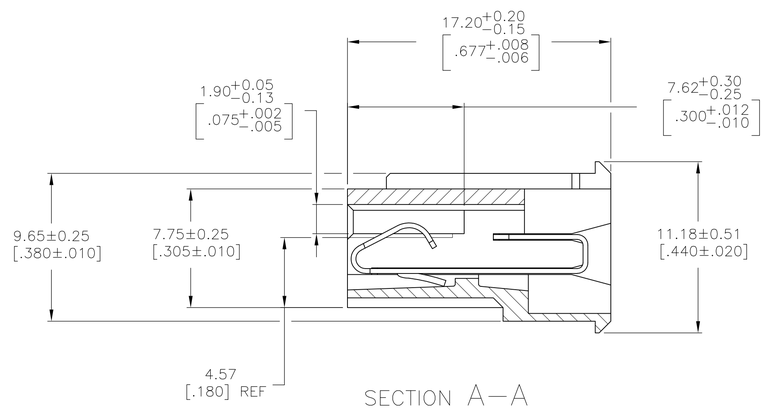

SECTION A–A

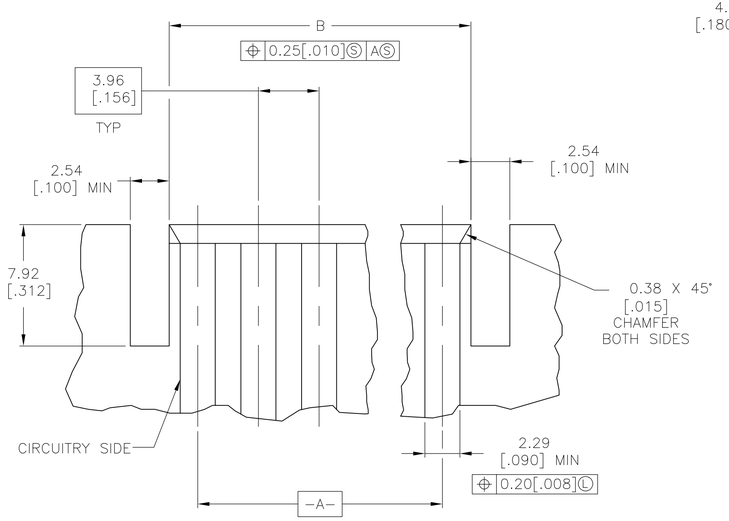

RECOMMENDED P.C. BOARD LAYOUT

	CONTACT FINISH B	A	NO. OF CIRCUITS	PART NUMBER
(6)	95.50 [3.760]	95.91 [3.776]	24	5-641284-4
	91.54 [3.604]	91.95 [3.620]	23	5-641284-3
	87.58 [3.448]	87.99 [3.464]	22	5-641284-2
	83.62 [3.292]	84.02 [3.308]	21	5-641284-1
	79.65 [3.136]	80.06 [3.152]	20	5-641284-0
	71.73 [2.824]	72.14 [2.840]	18	4-641284-8
	59.84 [2.356]	60.25 [2.372]	15	4-641284-5
	47.96 [1.888]	48.36 [1.904]	12	4-641284-2
	36.07 [1.420]	36.47 [1.436]	9	3-641284-9
	24.18 [.952]	24.59 [.968]	6	3-641284-6
	12.29 [.484]	12.70 [.500]	3	3-641284-3
SUPERCEDED (5) (7)	95.50 [3.760]	95.91 [3.776]	24	2-641284-4
	91.54 [3.604]	91.95 [3.620]	23	2-641284-3
	87.58 [3.448]	87.99 [3.464]	22	2-641284-2
	83.62 [3.292]	84.02 [3.308]	21	2-641284-1
	79.65 [3.136]	80.06 [3.152]	20	2-641284-0
	71.73 [2.824]	72.14 [2.840]	18	1-641284-8
	59.84 [2.356]	60.25 [2.372]	15	1-641284-5
	47.96 [1.888]	48.36 [1.904]	12	1-641284-2
	36.07 [1.420]	36.47 [1.436]	9	641284-9
	24.18 [.952]	24.59 [.968]	6	641284-6
	12.29 [.484]	12.70 [.500]	3	641284-3

THIS DRAWING IS A CONTROLLED DOCUMENT.

DIMENSIONS: mm [INCHES]

TOLERANCES UNLESS OTHERWISE SPECIFIED:
0 PLC ± –
1 PLC ± –
2 PLC ± 0.13 [.005]
3 PLC ± –
4 PLC ± –
ANGLES ± –

MATERIAL: SEE NOTE 1
FINISH: SEE NOTE 1

METRIC

DWN K. SALMON 29OCT91
CHK R. SWING 29OCT91
APVD –
PRODUCT SPEC —
APPLICATION SPEC —
WEIGHT —

Tyco Electronics
Tyco Electronics Corporation
Harrisburg, PA 17105-3608

NAME: MTA-156 CARD EDGE CONNECTOR ASSEMBLY, 20 AWG

SIZE	CAGE CODE	DRAWING NO	RESTRICTED TO
A1	00779	C-641284	—

CUSTOMER DRAWING | SCALE 5:1 | SHEET 1 OF 1 | REV R1