THIS DRAWING IS UNPUBLISHED. RELEASED FOR PUBLICATION -.- .
© COPYRIGHT - BY TYCO ELECTRONICS CORPORATION, ALL RIGHTS RESERVED.

LOC	DIST
GP	00

REVISIONS

P	LTR	DESCRIPTION	DATE	DWN	APVD
	O	RELEASED PER EC 0S13-0087-05	20SEP05	GP	JG

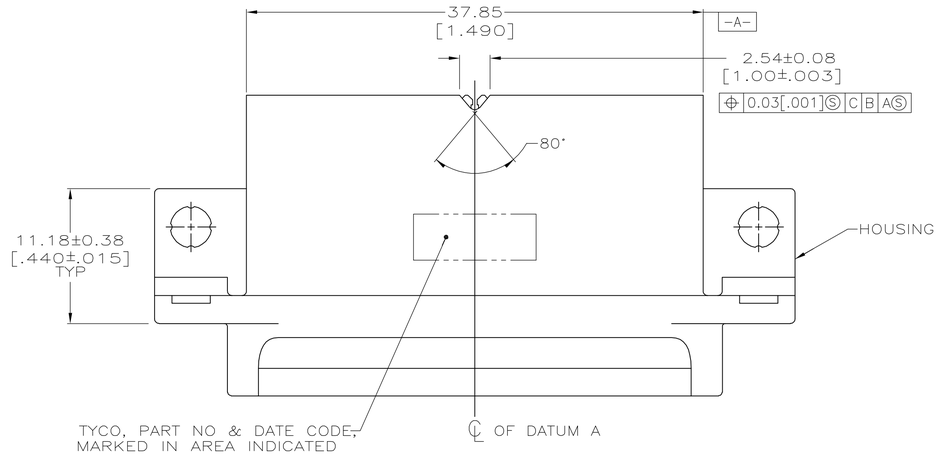

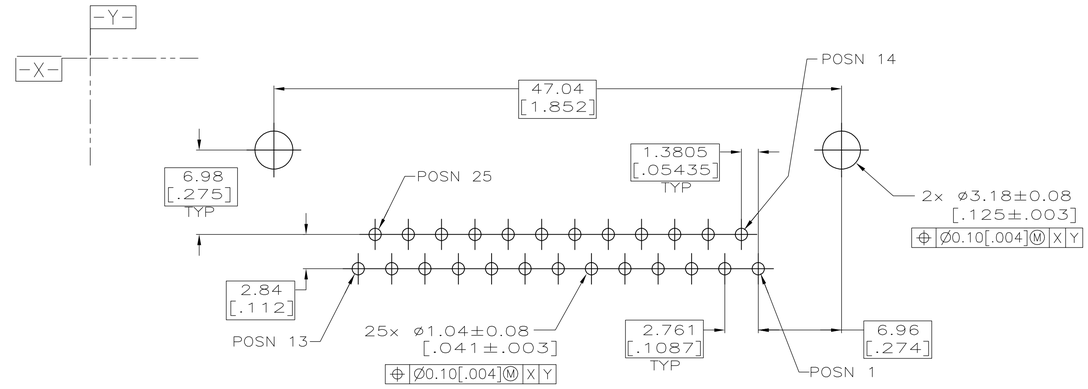

PC BOARD MOUNTING DIMENSIONS

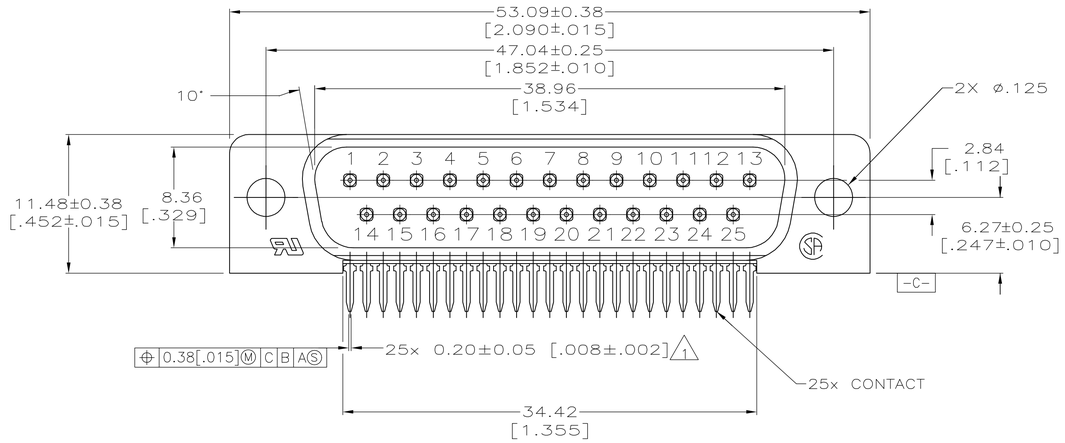

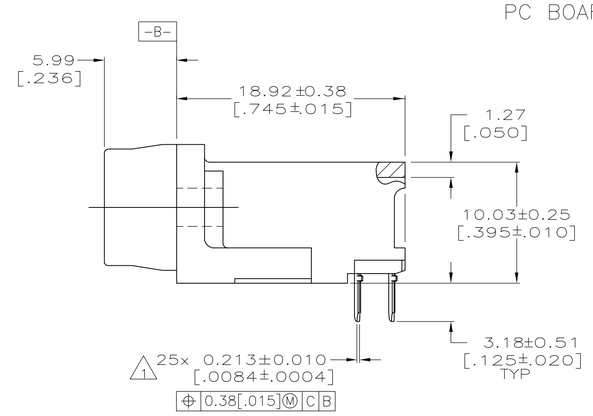

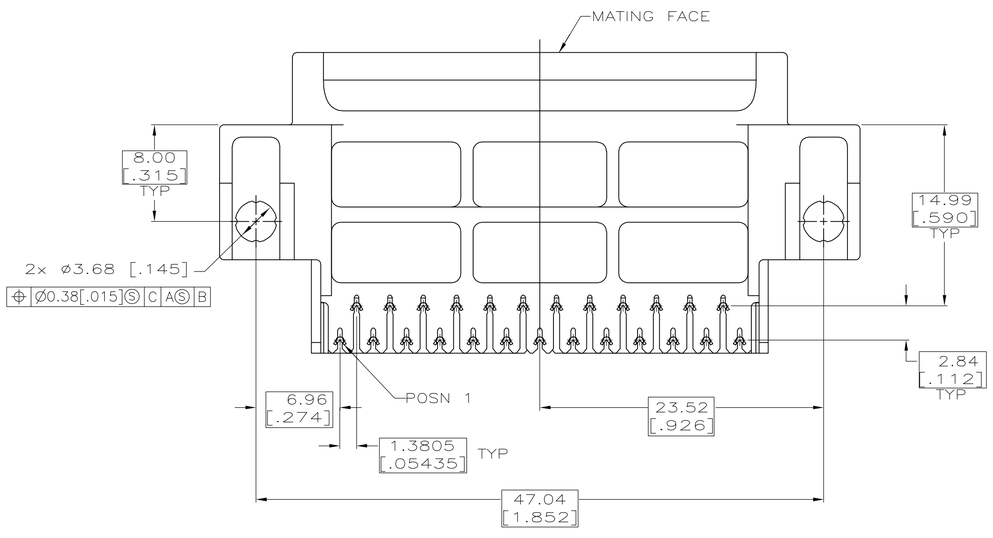

1. POSITION TOLERANCE APPLIES AT TIP ONLY.
2. HOUSING: FLAME RETARDENT UL94V-0 NYLON OR POLYESTER; COLOR: BLACK
   CONTACTS: BRASS
3. GOLD PLATED FOR A LENGTH OF 3.81[.150] MIN FROM MATING END, 0.76 µm[.000030] MIN GOLD IN MATED AREA, 2.54 µm[.0001] MIN TIN FOR A LENGTH OF 3.68[.145] MIN FROM OPPOSITE END, BOTH OVER 1.27 µm[.000050] MIN NICKEL.
4. GOLD PLATED FOR A LENGTH OF 3.81[.150] MIN FROM MATING END, GOLD FLASH IN MATED AREA, 2.54 µm[.0001] MIN TIN FOR A LENGTH OF 3.68[.145] FROM OPPOSITE END, BOTH OVER 1.27 µm[.000050] MIN NICKEL.

CONTACT FINISH	PART NO
4	5748826-2
3	5748826-1

COPYRIGHT 2005
TYCO ELECTRONICS CORP
ALL RIGHTS RESERVED

THIS DRAWING IS A CONTROLLED DOCUMENT.

DIMENSIONS: mm [INCHES]

TOLERANCES UNLESS OTHERWISE SPECIFIED:
0 PLC ± -
1 PLC ± -
2 PLC ± 0.13 [.005]
3 PLC ± -
4 PLC ± -
ANGLES ± 2°

MATERIAL 2

FINISH SEE TABLE

DWN G.PETERS 20SEP05
CHK S.BOLASH 20SEP05
APVD M.WALMSLEY 20SEP05
PRODUCT SPEC 108-1226
APPLICATION SPEC 114-40027
WEIGHT -

Tyco Electronics Corporation
Harrisburg, PA 17105-3608

NAME: PLUG ASSEMBLY, SIZE 3, 25 POSN, ALL PLASTIC, RIGHT ANGLE, .590 SERIES, AMPLIMITE III

SIZE	CAGE CODE	DRAWING NO	RESTRICTED TO
A1	00779	C-5748826	-

CUSTOMER DRAWING | SCALE 4:1 | SHEET 1 OF 1 | REV O

AMP 4805 REV 31MAR2000