THIS COPY IS PROVIDED ON A RESTRICTED BASIS AND IS NOT TO BE USED IN ANY WAY DETRIMENTAL TO THE INTERESTS OF PANDUIT CORP.

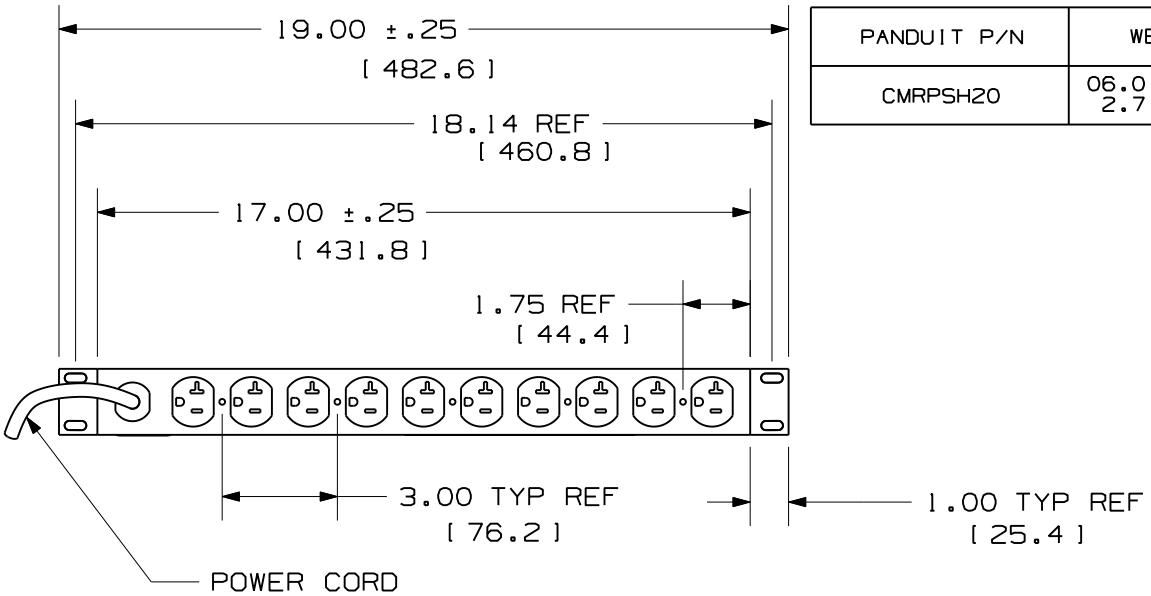

PANDUIT P/N	WEIGHT
CMRPSH20	06.0 LBS/EACH 2.7 Kg/EACH

NOTES:

1. IDENTIFICATION: 125 VOLT HORIZONTAL POWER STRIP WITH TEN, 20 AMP (REAR MOUNTED) OUTLETS.

   PART NO — COLOR
   CMRPSH20 — BLACK

2. ACCESSORY COMPONENTS:
   (4) #10-32 X 1/2" MOUNTING SCREWS
   (4) #12-24 X 1/2" MOUNTING SCREWS

3. THE POWER STRIP SHALL HAVE THE FOLLOWING:
   -TEN (10) - NEMA 5-20R OUTLETS (5 DUPLEX RECEPTACLES)
   -10 FOOT POWER CORD WITH NEMA 5-20P PLUG

4. DIMENSIONS IN PARENTHESES ARE METRIC [mm].

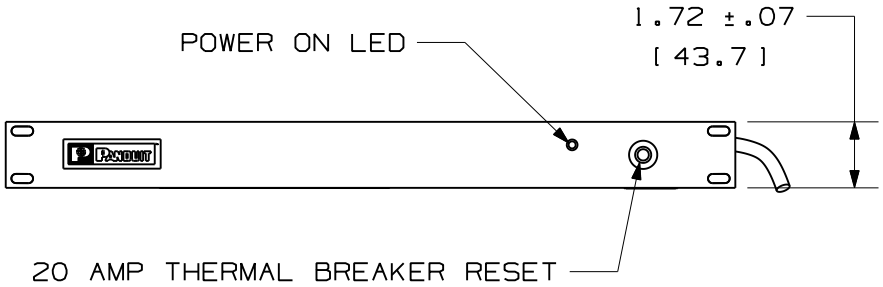

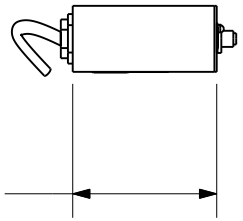

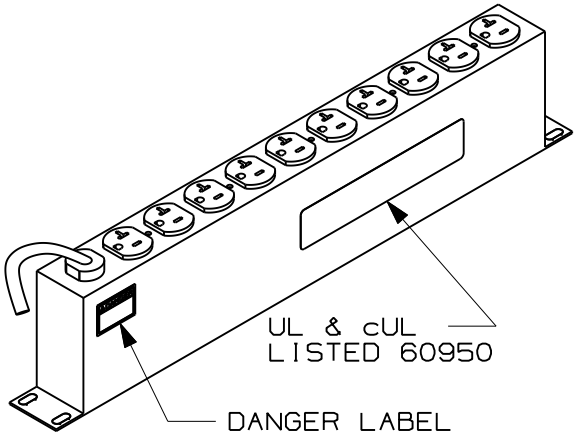

MODEL FILENAME: V01129CB_CMRPSH20_00.PRT

CAD FILENAME/LAYERS: V01129CB_DC_00D.PRT

PANDUIT CORP. TINLEY PARK, ILLINOIS

1RU 19" HORIZONTAL POWER STRIP
20 AMP 125V (CMRPSH20)
CUSTOMER DRAWING

REV	DATE	BY	CHK	DESCRIPTION	ECN - R	CUST	SUP	OTH
---	---	---		K. UPDATED TITLE BLOCK J. ADDED WEIGHT BOX I. NOTE 3 WAS THE POWER STRIP SHALL HAVE THE FOLLOWING:-TEN (10) - NEMA 5-20R OUTLETS (5 DUPLEX 20 AMP RECEPTACLES)WITH NEMA 5-20P PLUG H. NOTE 4 WAS METRIC DIMENSIONS SHOWN IN BRACKETS ARE FOR REFERENCE ONLY [MM].	---			
00D	5-4-09	MRWA		G. NOTE 3 WAS SEE SPEC. SHEET SA-NCIOSPOIF FOR TECHNICAL SPECIFICATIONS. F. ADDED UL LABEL AND TEXT E. ADDED DANGER LABEL AND TEXT	01129-05			
00C	4-22-02	MAV		B. REMOVED THUMB SCREWS W/RETAINING RINGS C. ADDED VOLTAGE TO NOTE #1 D. ADDED SPEC SHEET #	01129-05			
00B	9-7-01	MAV	MJM	A. REVISED ACCESSORY COMPONENTS	01129-05	JWI		
00A	7-24-01	JDWE	MJM	RELEASED TO PRODUCTION	01129-05	JWI		

UNLESS OTHERWISE SPECIFIED, DIMENSIONAL TOLERANCES ARE:
(.X) ± (.XXX) ±
(.XX) ± ANGLES ±

UNLESS OTHERWISE SPECIFIED, ALL DIMENSIONS ARE GIVEN IN INCHES, THIRD ANGLE PROJECTION.

DRAWN BY: JDWE
DATE: 7-24-01
CHK'D: MJM
MAT'L: COLD-ROLLED STEEL
SCALE: 1:5
DRAWING NO.: 01129-05
DWG SIZE: A