732-631
643
655
667

204 80

ALTECNIC

DATA SHEET

IM-TR2

CONTROL THERMOSTAT

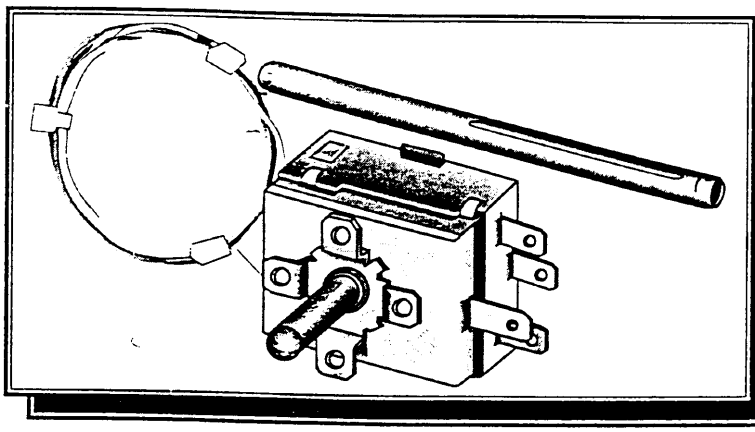

INTRODUCTION

Thermostat, single pole, liquid filled sensing bulb and bellows, operating switch contacts for the automatic adjustment of the temperature of boilers, electric radiators, ovens, washing machines, dish washers etc, besides different applications in the field of home and industry, air conditioning and house hold appliances. Sensing bulb may be supplied with pocket or gland for liquid sealing.

TECHNICAL DATA

CONTACTS: Ag 1000/1000
CONTACTS RATING: 15 (2.5)A 250V~
10A 380V~
Cutoff contacts for temperature raising or switching contact
MAX. HEAD TEMPERATURE: 150°C
CAPILLARY LENGTH: 1000mm
MIN. CAPILLARY BENDING RADIUS: 5mm
NOISE LEVEL: VDE cl. N
NUMBER OF AUTOMATIC CYCLES:
II (100.000)
TEMPERATURE RATE OF CHANGE: 1°K/min
RESISTANCE TO TRACKING: PTI 250 (B 250)

HOW TO ORDER

CODE	**540043**
Temperature Range	-30°/+35°C
Temperature Differential	Δt = 1.5° ±0.5°C
Max. Bulb Temperature	65°C
Copper Bulb	ø6 x 215mm

CODE	**540030**
Temperature Range	0°/40°C
Temperature Differential	Δt = 2° ±1°K
Max. Bulb Temperature	65°C
Copper Bulb	ø9.5 x 95mm

CODE	**540010**
Temperature Range	0°/90°C
Temperature Differential	Δt = 4° ±1°K
Max. Bulb Temperature	150°C
Copper Bulb	ø6.5 x 95mm

CODE	**540160**
Temperature Range	0°/ +120°C
Temperature Differential	Δt = 4° ±1°K
Max. Bulb Temperature	150°C
Copper Bulb	ø6.5 x 95mm

CODE	**540140**
Temperature Range	0°/210°C
Temperature Differential	Δt = 9° ±2°K
Max. Bulb Temperature	270°C
Copper Bulb	ø5 x 136mm

CODE	**540020**
Temperature Range	0°/300°C
Temperature Differential	Δt = 10° ±2°K
Max. Bulb Temperature	350°C
Copper Bulb	ø3.5 x 195mm

CODE	**541307**
Temperature Range	0°/90°C
Temperature Differential	Δt = 4° ±1°K
Max. Bulb Temperature	150°C
Copper Bulb	ø6.5 x 95mm
Capillary Length	1500mm
Adjustment by screw	

CODE	**540080**
Temperature Range (conditioning)	17.5°/30.5°C
Temperature Differential	Δt = 1.5° ±0.5°K
Max. Bulb Temperature	65°C
Copper Bulb	ø6.5 x 210mm
Contacts Rating	15(15)A 60 LRA 250V~
Silver/Cadmium oxyde contacts	Ag/Cd
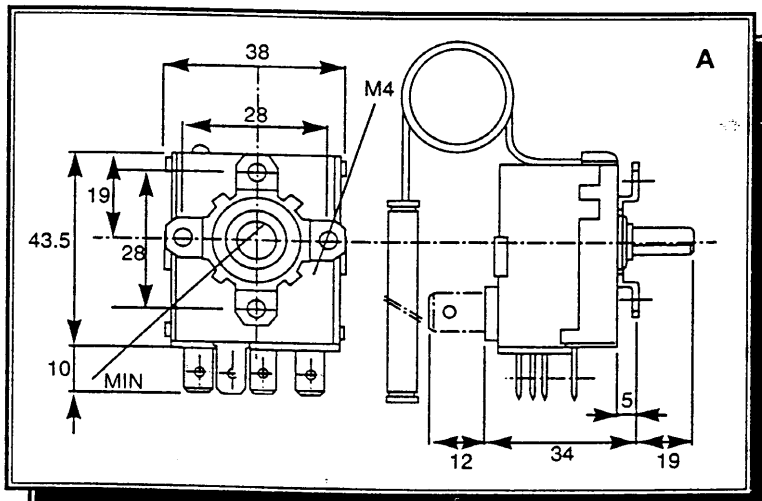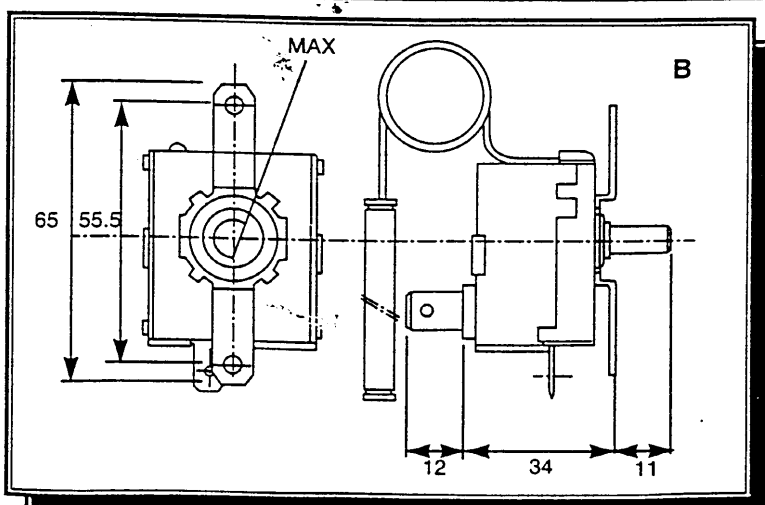
DIMENSIONS