MATERIAL NO.	CABLE SIZE	CABLE ø RANGE	DIM. "A"
1302441204	2.5 mm² / 14 AWG	5.8-6.7 / .23-.26	7.0 / .28
1302441202	4.0-6.0 mm² / 12-10 AWG	6.7-7.8 / .26-.31	8.4 / .33

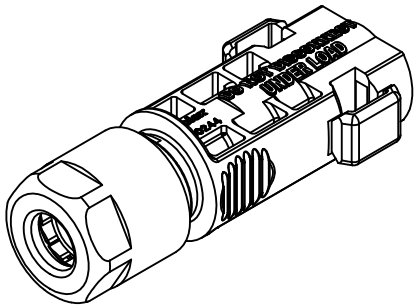

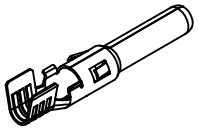

12-10 AWG SHOWN

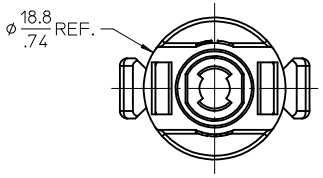

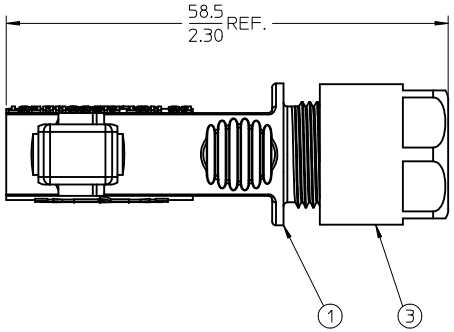

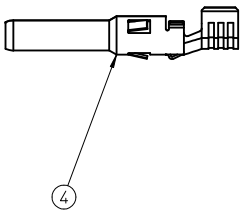

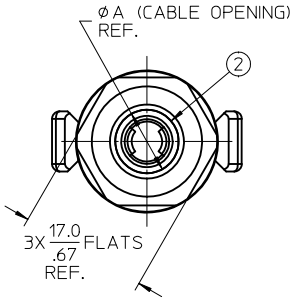

NOTES:

1. MATERIALS: SEE TABLE
2. FINISHES: SEE TABLE
3. PRODUCT SPECIFICATION: PS-130244-001
4. PACKAGING SPECIFICATION: PK-130244-022
5. MATES WITH: 1302441201 OR 1302441203
6. ASSEMBLY IS ROHS COMPLIANT.
7. 5 ASSEMBLIES PER KIT.

ITEM	QTY.	DESCRIPTION	MATERIAL	FINISH
4	1	CONTACT, PIN	COPPER ALLOY	SELECTIVE SILVER
3	1	CABLE RETENTION NUT	POLYCARBONATE (PC)	BLACK
2	1	CABLE GROMMET	SILICONE	TRANSLUCENT
1	1	PIN HOUSING	POLYCARBONATE (PC)	BLACK

PRELIMINARY
EC NO: WNA2011-0336
DRWN:CLYORK 2010/12/15
CHKD:DTITUS
APPR:DTITUS 2010/12/17
REV | DESCRIPTION

QUALITY SYMBOLS
▼=0
▽=0

GENERAL TOLERANCES (UNLESS SPECIFIED)

	mm	INCH
4 PLACES	± ---	± ---
3 PLACES	± ---	± .005
2 PLACES	± 0.13	± .010
1 PLACE	± 0.25	± ---
ANGULAR ± 2 °		

DRAFT WHERE APPLICABLE MUST REMAIN WITHIN DIMENSIONS

DIMENSION STYLE: MM/IN
SCALE: 2:1
DESIGN UNITS: METRIC
THIRD ANGLE PROJECTION

DRAWN BY: CLYORK	DATE: 2010/08/13	TITLE: PIN ASSEMBLY KIT, PV SOLAR DC CONNECTOR, 14-10 AWG
CHECKED BY: DTITUS	DATE: 2010/08/13	
APPROVED BY: DTITUS	DATE: 2010/12/06	molex MOLEX INCORPORATED
MATERIAL NO.: SEE CHART		DOCUMENT NO.: SD-130244-022 — SHEET NO.: 1 OF 1

SIZE: C

THIS DRAWING CONTAINS INFORMATION THAT IS PROPRIETARY TO MOLEX INCORPORATED AND SHOULD NOT BE USED WITHOUT WRITTEN PERMISSION