REV.	DATE	DESCRIPTION
NC	11/10/03	INITIAL RELEASE
A	01/17/05	UPDATE RESISTOR WATTAGE – 2 WATTS

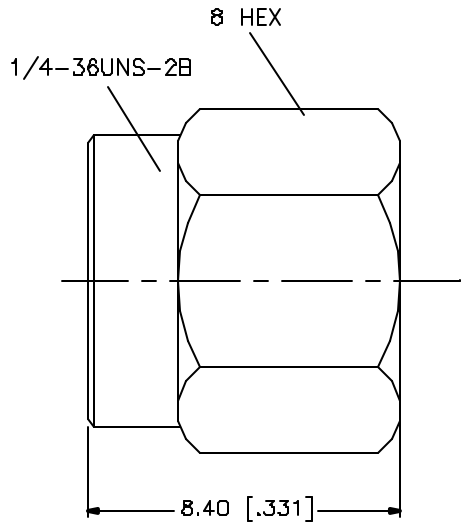

	DESCRIPTION	MATERIAL	FINISH	QTY
8				
7				
6				
5				
4	RESISTOR	1DOR	2 WATT – 1%	2
3	CONTACT PIN	BRASS	GOLD	1
2	INSULATOR	TEFLON	NATURAL	1
1	BODY	BRASS	GOLD	1

UNLESS OTHERWISE SPECIFIED DIMENSIONS ARE IN MILLIMETERS. DIMENSIONS IN [ ] ARE IN INCHES AND FOR CUSTOMER REFERENCE ONLY.

UNLESS OTHERWISE SPECIFIED TOLERANCES FOR MILLIMETERS ARE:
0.5 – 8mm ± 0.20mm
8 – 30mm ± 0.40mm
30 – 120mm ± 0.50mm

UNLESS OTHERWISE SPECIFIED TOLERANCES FOR INCHES ARE:
.020 – .315 = ± 0.007"
.315 – 1.180 = ± 0.015"
1.180 – 4.724 = ± 0.020"

DO NOT SCALE DRAWING

APPROVALS		DATE
DRAWN	G.R.S.	01/17/05
CHECKED		
ISSUED		
SHEET	1 OF 1	

CAD FILE C:/132/132360.DWG

Amphenol Connex

PART DESCRIPTION: SMA TERMINATOR PLUG (50 ohm)

PART NO. 132360

DWG. NO. 132360.DWG | REV. A | SIZE A | SCALE NA