Tous droits strictement reserves. Reproduction ou communication a des tiers interdite sous quelque forme que ce soit sans autorisation ecrite du propietaire. Propriete de c FCI. Droits de reproduction FCI.

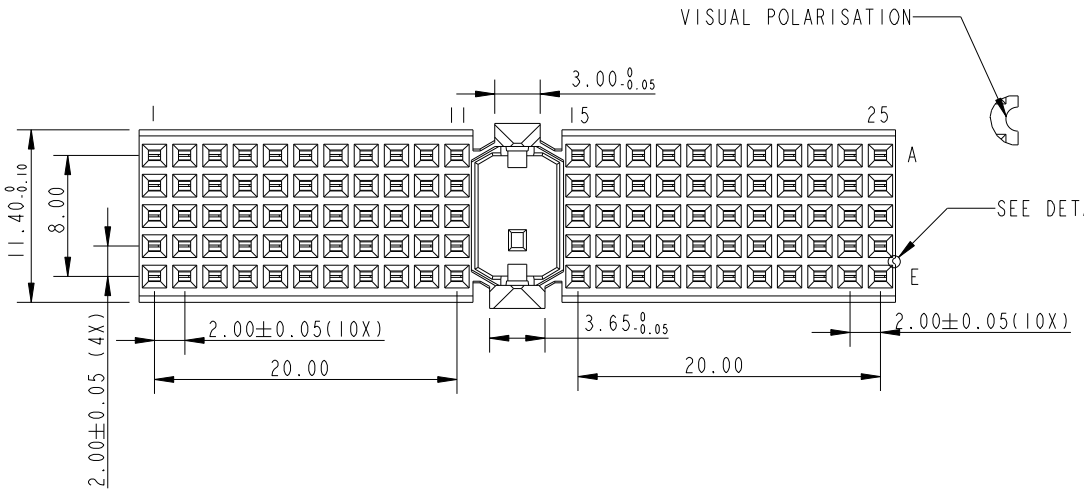

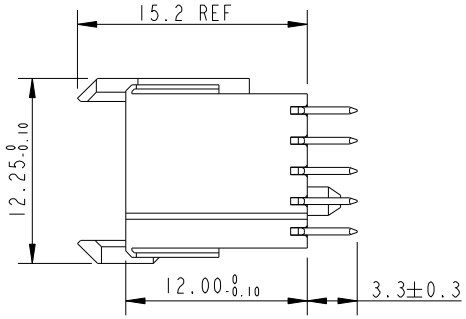

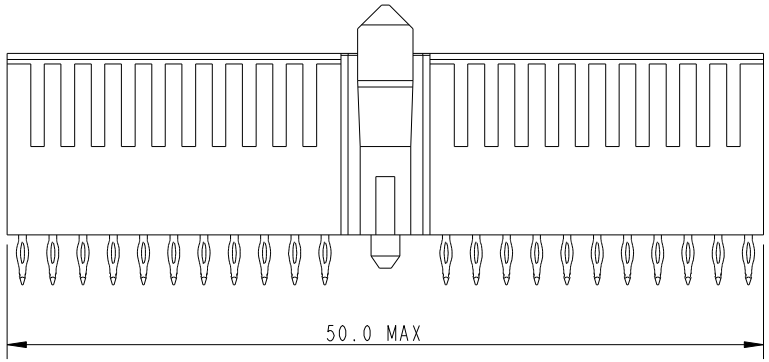

PERFORMANCE CHARACTERISTICS

CURRENT RATING 1.5A AT 20°C (FULLY LOADED)
1 A AT 70°C (FULLY LOADED)

RATED VOLTAGE : 500 V AC (CONT /CONT)

OPERATING TEMPERATURE : -55°C TO 125°C

CONTACT RESISTANCE 20 MΩ MAX

INSERTION FORCE : 0.75N MAX/CONT

EXTRACTION FORCE : 0.15N MIN/CONT

INSULATION RESISTANCE : 10^4 MΩ MIN

NOTES

1. " " — LEAD FREE INDICATOR :LF=LEAD FREE; PERFORMANCE LEVEL INDICATIOR (REF DWG NO.BSC .201844.003)
2. THIS PRODUCT IS CSA APPROVED.
   THIS PRODUCT IS UL RECOGNIZED.
3. FOR RECOMMENDED PTH DIMENSIONS REFER DRAWING :BS.A.201572.001
4. THIS PRODUCT (LF) MEETS EUROPEAN UNION DIRECTIVES AND OTHER COUNTRY REGULATIONS AS DESCRIBED IN GS-22-008

LAY OUT
P.C.B -HOLE

(FRONT SIDE)

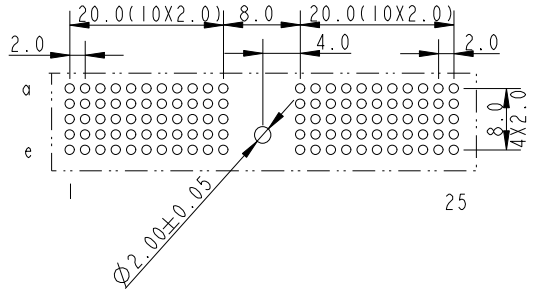

rev	ecn no	dr	date
A	CONVERSION REVISION 00	KN	14-09-01
B	DG05-0278	Kasan	02-08-05
-	-	-	-
-	-	-	-
-	-	-	-
-	-	-	-
-	-	-	-

Material			Spec ref		
Mat code			✓	tolerance 1DEC±0.2 1DEC 2DEC±0.1 2DEC ANGLES±1° HOEKEN	projection MM
Heattreat					
Plating/Finish					
Dr	W.Panis	27-01-95		size A4	Scale 2.000
Eng			Product family	MILLIPACS	
Chr			Model Name		ECN DG05-0278
Appr			Model Revision		REL Level

FCI

title: MPACS 5R STR RCP SG PF ASSY TYPE A

dwg no: BSC201907001 Rev. B

Pro/E file: HM2S01PE5100---- catalog no: CUSTOMER DRAWING sheet 1 of 1

All rights strictly reserved. Reproduction or issue to third parties in any form whatever is not permitted without written authority from the proprietor. Property of FCI. Copyright FCI.

PDM: Rev:B STATUS: Released Printed: Mar 15, 2011