THIS DRAWING IS UNPUBLISHED. RELEASED FOR PUBLICATION -,- .
© COPYRIGHT - BY TYCO ELECTRONICS CORPORATION. ALL RIGHTS RESERVED.

LOC	DIST
H	—

REVISIONS

P	LTR	DESCRIPTION	DATE	DWN	APVD
	G4	REV PER ECR-10-000455	07JAN2010	JY	SY
	H	ECR-10-018652	10SEP10	SW	MQW
	J	ECR-12-010544	6NOV12	SY	AC

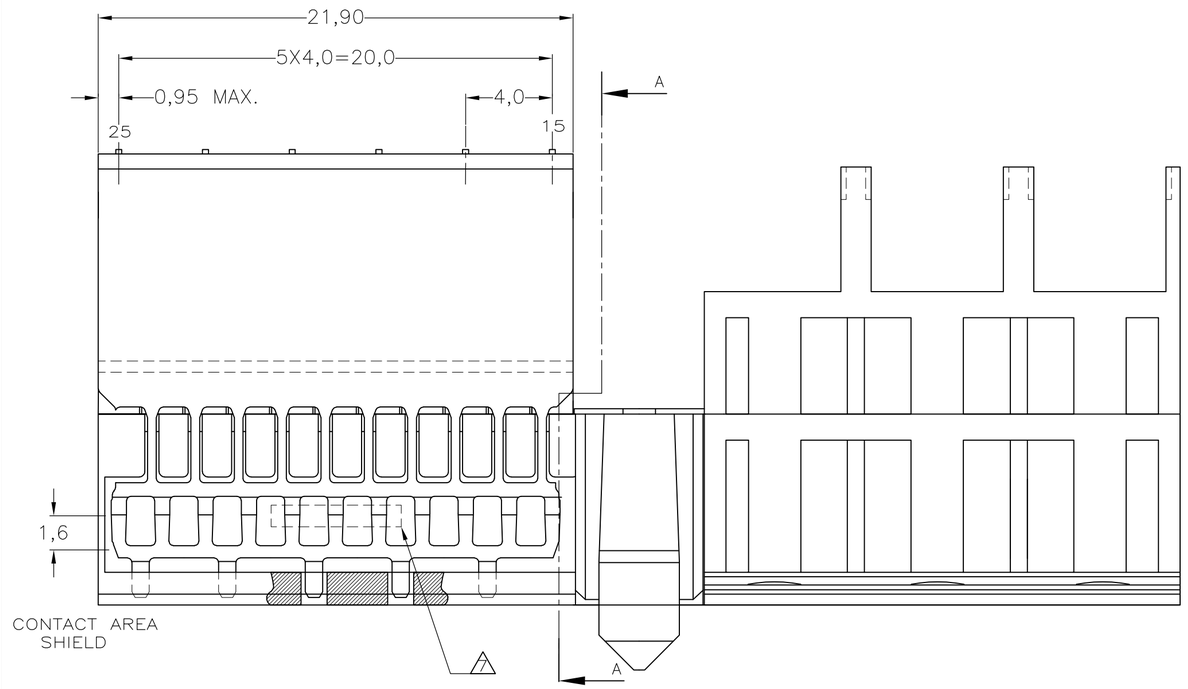

SECTION A–A

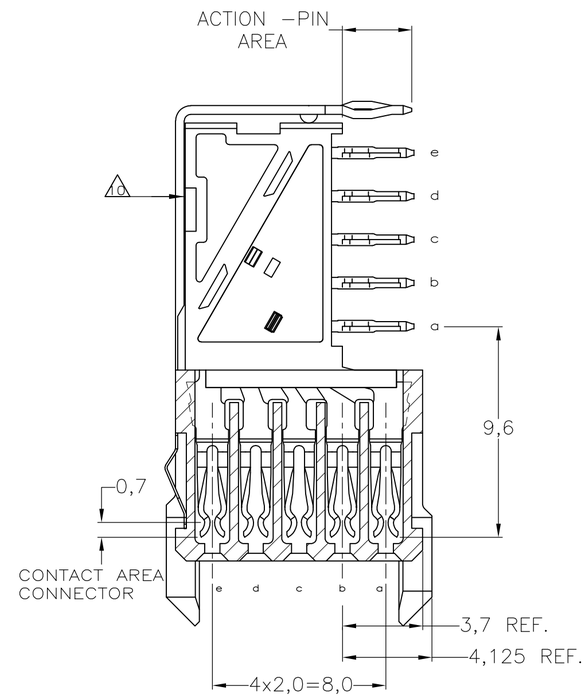

NOTES:

1. MATERIAL CONTACTS; PHOSPHORBRONZE
   MATERIAL SHIELDING; PHOSPHORBRONZE
   MATERIAL HOUSING; GLASSFILLED POLYESTER (GRAY)
   UL–RATING 94V0.
2. GENERAL PLATING SPECIFICATION: UNDERPLATING (ENTIRE CONTACT): 1,27µm NICKEL MIN. AND ACTION PIN: 0,5µm TIN–LEAD MIN. FOR PLATING OF MATING SURFACES SEE APPLICABLE SPECIFICATION REFERENCE FOR EACH DASH NUMBER.
3. CONFORMS TO ALL TESTING ACCORDING IEC 61076–4–101 PERFORMANCE LEVEL 2.
4. CONNECTOR TESTED AND QUALIFIED AGAINST TELCORDIA GR–1217–CORE QUALITY LEVEL III, CENTRAL OFFICE APPLICATIONS.
5. CONNECTOR LUBRICATED WITH TELCORDIA GR–1217–CORE APPROVED LUBRICANT.
6. PLATING SHIELD:
   CONTACT AREA : 0,76µm Au MIN.
   ACTION PIN : 0,5µm SnPb MIN.
   REMAINDER : Ni
7. ASSEMBLY PRINTED WITH P/N AND DATECODE THE MARKING CAN APPEAR ON THE FRONT SIDE OR BACK SIDE.
8. HOLE PATTERN FOR FEMALE CONNECTOR TYPE M 55 PLATED–THROUGH HOLES AT 2x2mm SQUARE GRID
9. ROW "f" 6 PLATED THROUGH HOLES FOR UPPERSHIELD
10. SHIELD MOUNTED ON CONNECTOR WITH DOUBLE SIDED ADHESIVE TAPE OR ADHESIVE
11. AREA RESERVED FOR KEYING PART (BASIC P.N. 100526)
12. CONTACT CAVITIES (3x) SUITABLE FOR 4,8 DIA. HIGH CURRENT, HIGH FREQUENCY OR FIBRE OPTIC CONTACTS AS PER DIN 41626 (SEE ALSO NOTE 6).
13. 1,3 DIA. PLATED–THROUGH HOLES (15x) CAN BE OMITTED IF SPECIAL CONTACTS WITH CABLE CONNECTION OR FIBRE OPTIC CONTACTS ARE USED.
14. THIS ROW OF 11 CAVITIES (B1 TO B11) FOR CONNECTOR ASSEMBLY PURPOSE ONLY.
15. NOT PLATED–THROUGH HOLES (3x).
16. FITS WITH LOWERSHIELD BASIC P/N 352112
17. 0.76µm MIN GOLD PLATING AT MATING SURFACES.

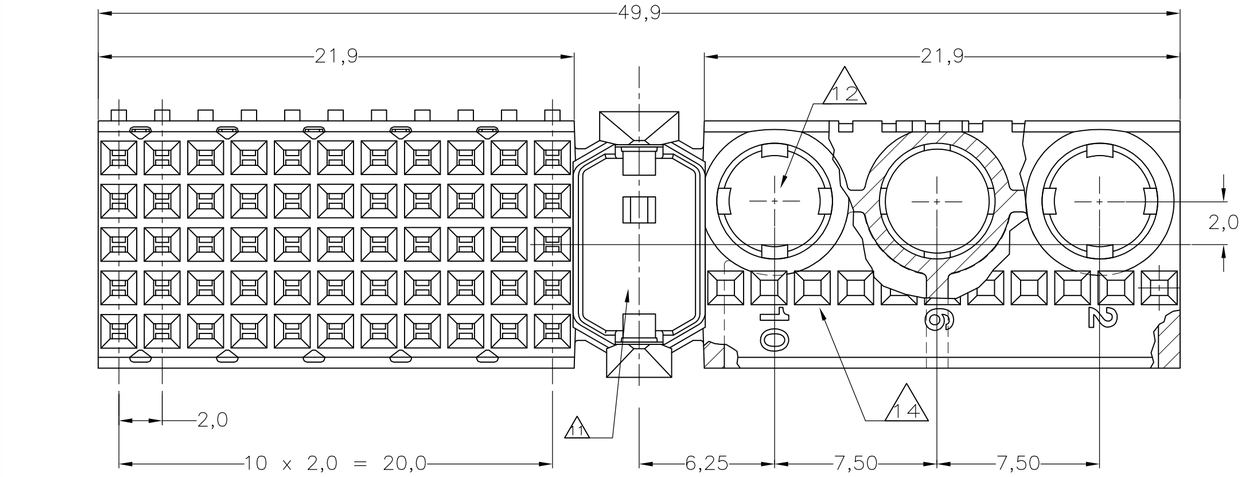

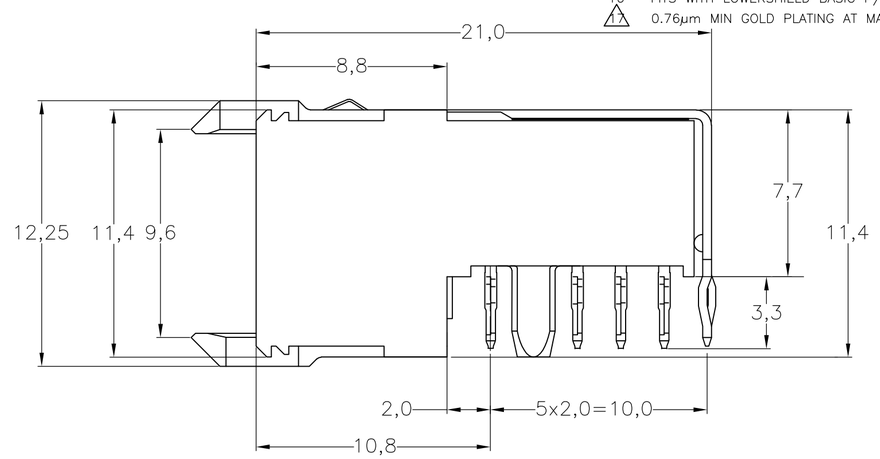

COMPONENT SIDE AS SHOWN
RECOMMENDED PCB–HOLE LAY–OUT
SCALE 2,5:1

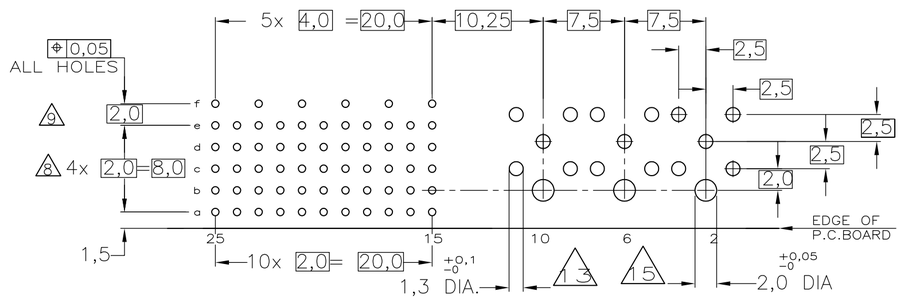

P.C.B. HOLE DIM. ACTION PIN
FOR DETAILS SEE
APPLICATION SPECIFICATION

	CONTACT FINISH	MATERIAL	PARTNUMBER
	2 3 6 17	1	3-352177-0
OBSOLETE	2 4 5 6	1	~~352177-9~~
OBSOLETE	2 3 6	1	~~352177-1~~

THIS DRAWING IS A CONTROLLED DOCUMENT.

DIMENSIONS: MM

TOLERANCES UNLESS OTHERWISE SPECIFIED:
0 PLC ± –
1 PLC ± –
2 PLC ± –
3 PLC ± –
4 PLC ± –
ANGLES ± –
±0.2

MATERIAL –
FINISH –

DWN D. TRUREN 20JAN97
CHK –
APVD –
PRODUCT SPEC 108-19082
APPLICATION SPEC 114-19029
WEIGHT –

Tyco Electronics
Tyco Electronics Corporation
s-HertogenBosch,Netherlands,

NAME
Z-PACK 2MM HM
TYPE M (55 POS.)
PRE-SHIELDED RECEPTACLE

SIZE A2 | CAGE CODE 00779 | DRAWING NO C-352177 | RESTRICTED TO –

CUSTOMER DRAWING | SCALE NTS | SHEET 1 OF 1 | REV J

352177

AMP 1471-9 REV 31MAR2000