THIS DRAWING IS UNPUBLISHED. RELEASED FOR PUBLICATION -,- .
© COPYRIGHT - BY TYCO ELECTRONICS CORPORATION. ALL INTERNATIONAL RIGHTS RESERVED.

LOC	DIST
FT	0

REVISIONS

P	LTR	DESCRIPTION	DATE	DWN	APVD
	AA2	REVISED PER ECO-10-021995	05JAN11	HMR	MG

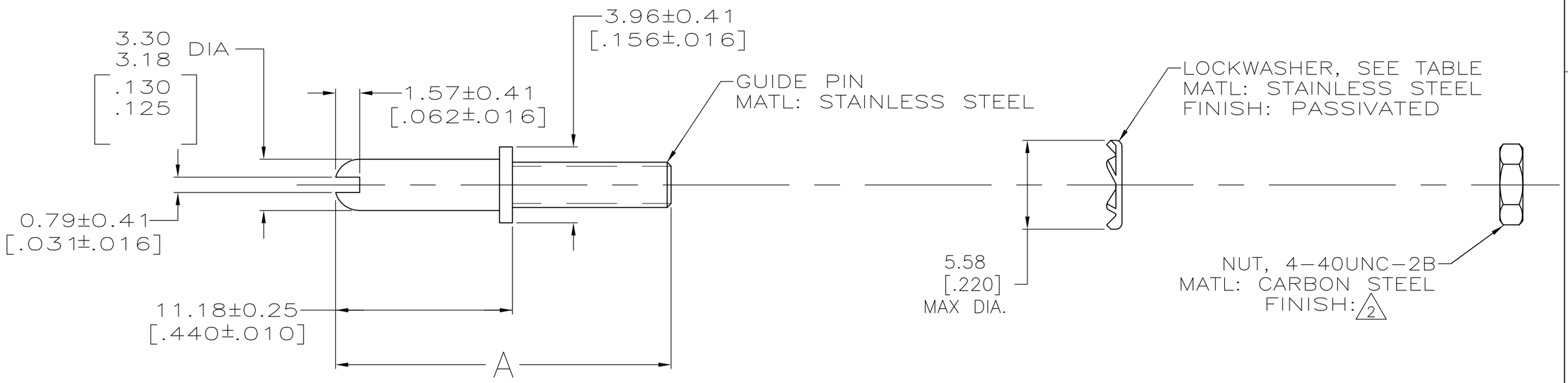

2 ZINC PLATE WITH NON-HEXAVALENT CHROMIUM.

3 OBSOLETE PARTS: OBSOLETE CIS STREAMLINING PER D.RENAUD/D.SINISI

	NUT FINISH	PACKAGING TYPE	LOCKWASHER TYPE	A	PART NUMBER
	2	STANDARD	EXTERNAL TOOTH	21.08±0.25 [.830±.010]	1-200833-1
3 SUPERSEDED	2	SMALL PACK	EXTERNAL TOOTH	21.08±0.25 [.830±.010]	~~1-200833-0~~
OBSOLETE	—	STANDARD	SPLIT	24.13-24.51 [.950-.965]	200833-8
SUPERSEDED BY 1-200833-1	2	STANDARD	EXTERNAL TOOTH	21.08±0.25 [.830±.010]	200833-2

THIS DRAWING IS A CONTROLLED DOCUMENT.

DIMENSIONS: mm [INCHES]

TOLERANCES UNLESS OTHERWISE SPECIFIED:
0 PLC ± -
1 PLC ± -
2 PLC ± -
3 PLC ± -
4 PLC ± -
ANGLES ± -

MATERIAL: SEE CALLOUTS
FINISH: SEE CALLOUTS

DWN D.GELTZ 04/19/93
CHK R.STONE 4-23-93
APVD — -
PRODUCT SPEC —
APPLICATION SPEC —
WEIGHT —

Tyco Electronics
Tyco Electronics Corporation
Harrisburg, PA 17105-3608

NAME: GUIDE PIN KIT, UNASSEMBLED, CORNER, MINIATURE RECTANGULAR, M SERIES
—

SIZE	CAGE CODE	DRAWING NO	RESTRICTED TO
A3	00779	C-200833	—

CUSTOMER DRAWING

SCALE	SHEET	REV
4:1	1 OF 1	AA2