CHARACTERISTICS	ELECTRICAL DATA
*OPERATING TORQUE - - - - 4.5 IN-LB MAX *FULL OVERTRAVEL TORQUE - - 6 IN-LB MAX *RELEASE TORQUE - - - - - - .75 IN-LB MIN PRETRAVEL - - - - - - - - - - 5° MAX OVERTRAVEL - - - - - - - - - - 30° MIN RELEASE TRAVEL - - - - - - - 0° 30' MIN SWITCH-BASIC REPLACEMENT - - 2MN8	CONTACT ARRANGEMENT (SEE CIRCUIT DIAGRAM) 10A-120,240 OR 480 VAC 1/4 HP-120 VAC, 1/2 HP-240 VAC PILOT DUTY: 600 VAC MAX

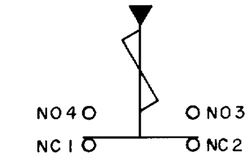

CIRCUIT DIAGRAM

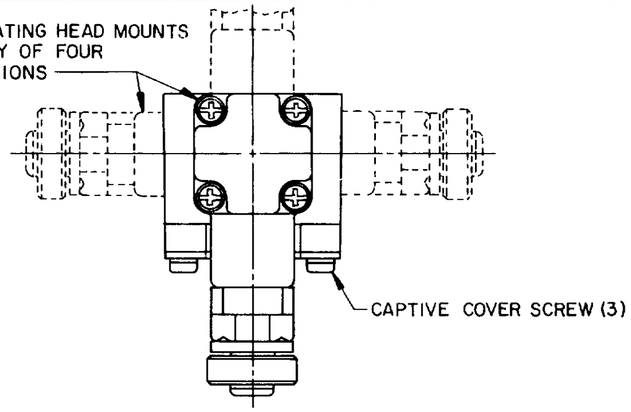

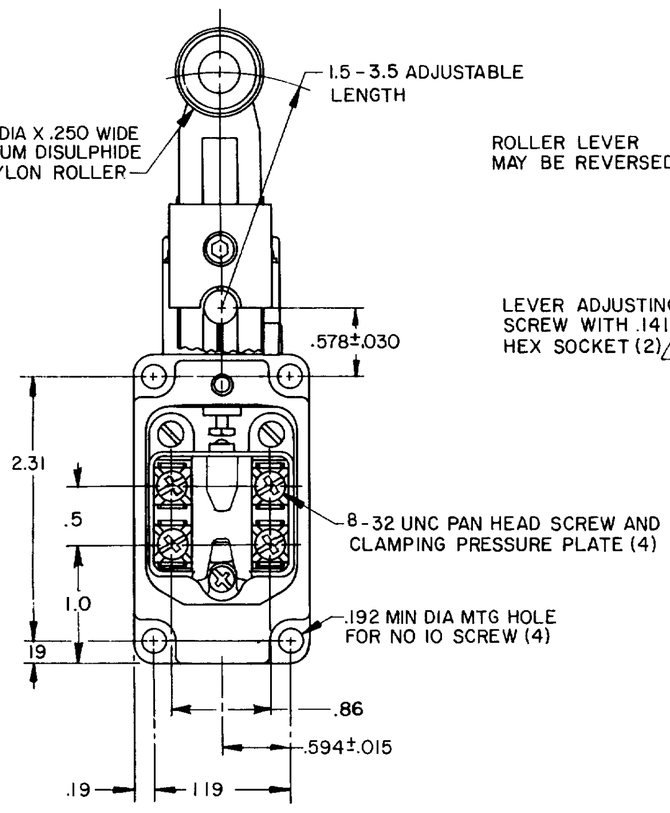

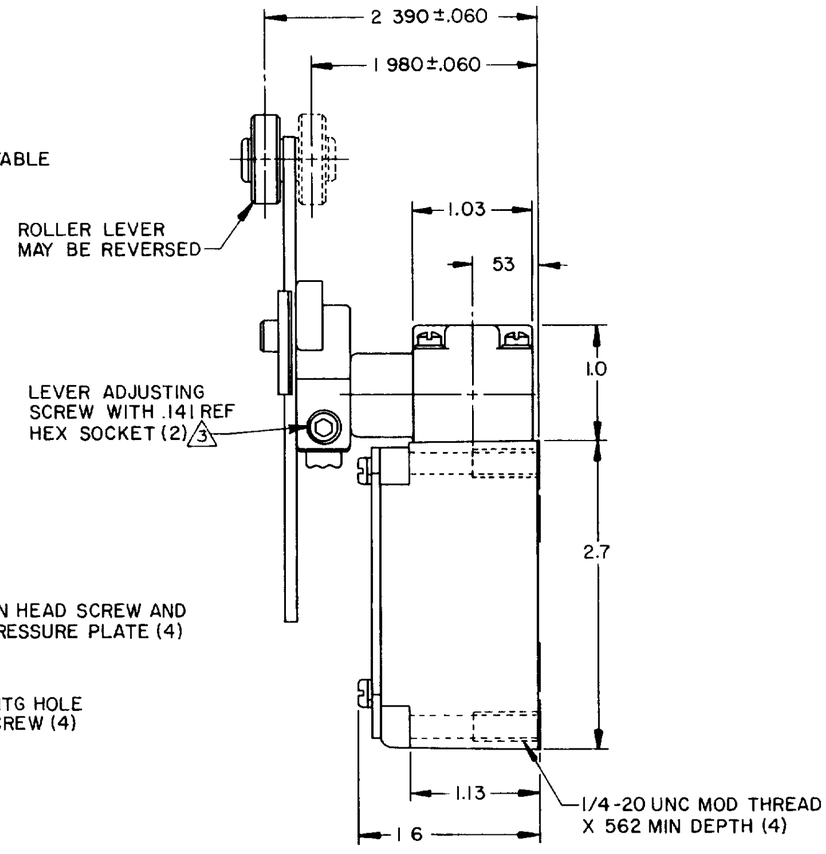

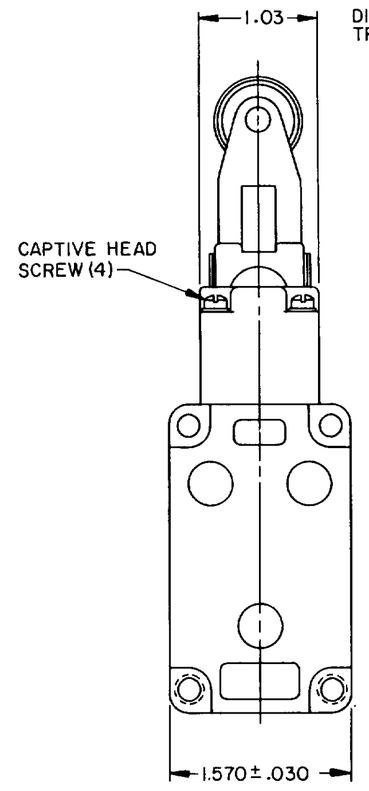

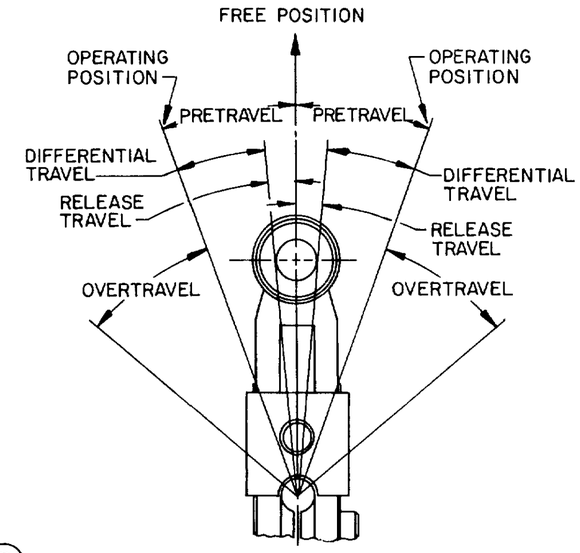

NOTES
1 - SWITCH IS ASSEMBLED FOR ACTUATION IN BOTH DIRECTIONS BUT MAY BE ADJUSTED TO ACTUATE IN THE CLOCKWISE DIRECTION ONLY OR THE COUNTERCLOCKWISE DIRECTION ONLY
2 - TO CONVERT SWITCH FOR ACTUATION IN EITHER THE CLOCKWISE OR COUNTERCLOCKWISE DIRECTION ONLY, REMOVE ACTUATOR HEAD AND ROTATE THE NOTCHED PLUNGER 90° TO THE RIGHT FOR CLOCKWISE ACTUATION OR 90° TO THE LEFT FOR COUNTERCLOCKWISE ACTUATION

3 ROLLER LEVER MAY BE LOCKED IN ANY POSITION THRU 360°
4 - LEVER FURNISHED UNASSEMBLED IN UNIT PACKING BOX
5 SEAL TO BE FURNISHED BY USER

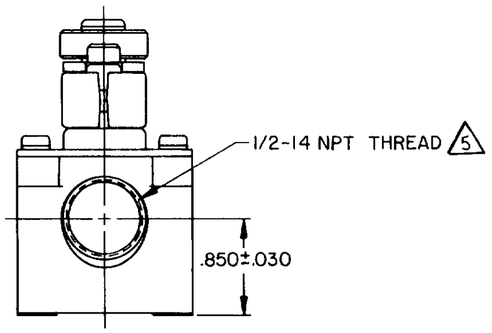

ILS58 | SR-12891 | M | X | 13 | 12

REVISIONS
A CO-60486 T A D 11 DEC 86
B CO 66552 G R T 29 NOV 89
C CO 77031 JDB 20 DEC 93
D CO 78083 GJW 17 JAN 95

TAD 11 DEC 86 | FO-52863-C

THIS DRAWING COVERS A PROPRIETARY ITEM AND IS THE PROPERTY OF MICRO SWITCH A DIVISION OF HONEYWELL THIS DRAWING IS NOT TO BE COPIED OR USED WITHOUT THE APPROVAL OF MICRO SWITCH

MICRO SWITCH a Honeywell Division
FED MFG CODE 91929

SWITCH - ENCLOSED

CATALOG LISTING
ILS58

THIRD ANGLE PROJECTION
SCALE FULL
DO NOT SCALE PRINT

UNLESS OTHERWISE SPECIFIED TOLERANCES ARE

ONE PLACE	(.0)	± .030
TWO PLACE	(.00)	± .015
THREE PLACE	(.000)	± .005
ANGLES		±

WEIGHT