LTR	DATE	REVISION	CHK	APD
A	11/12/98	07735- RELEASED JMB		
B	08/03/07	85543C-CHG MATERIAL FROM 057321 TO 057348 AND 057892 DHM		

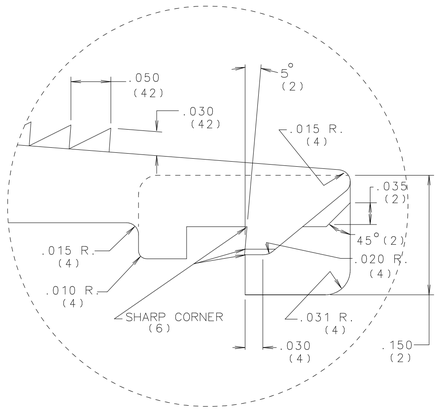

DETAIL "C"

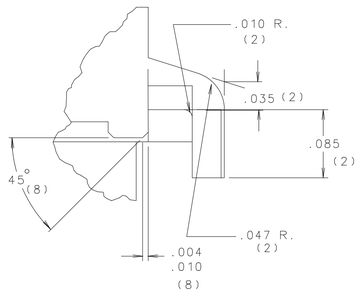

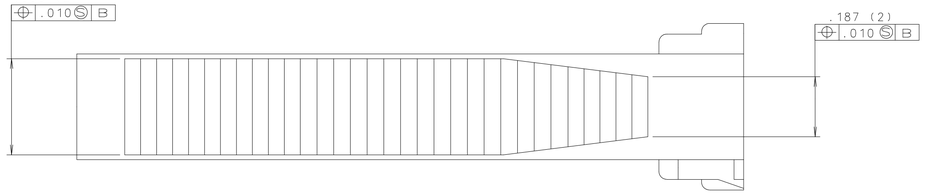

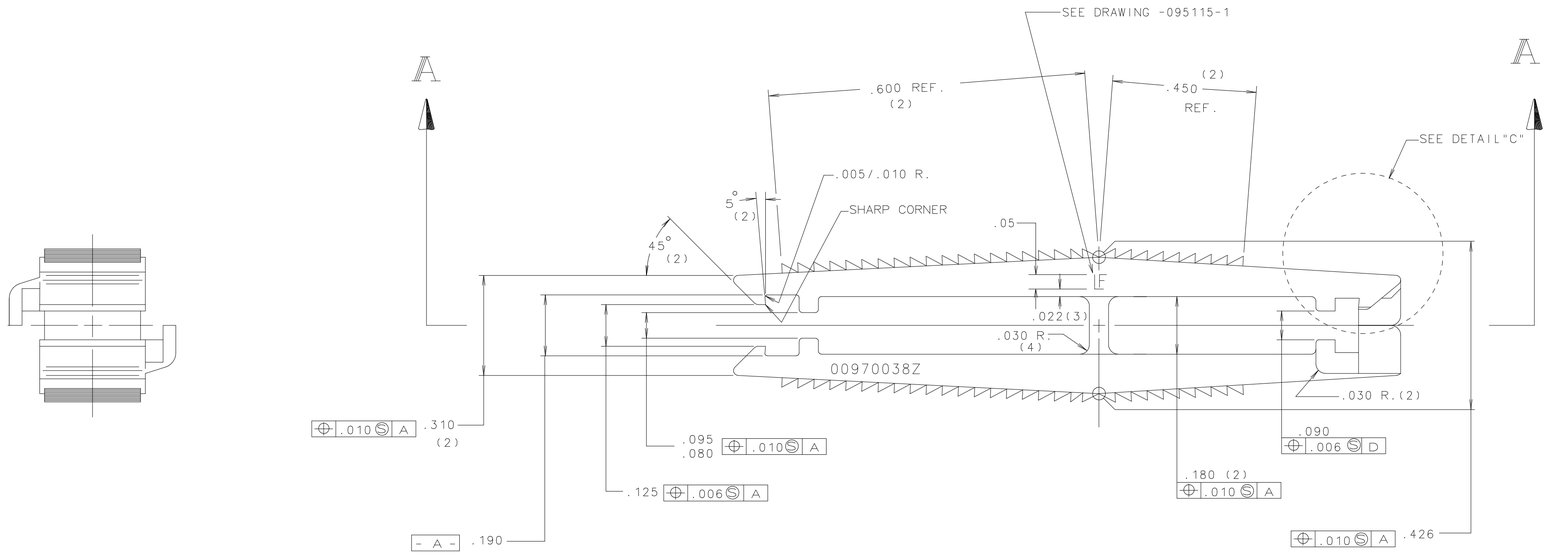

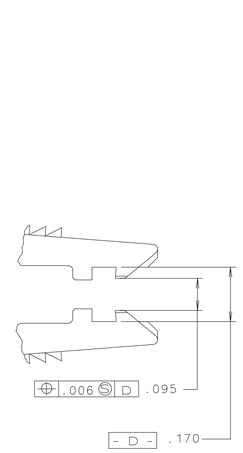

FUSE END GUIDES NOT SHOWN IN THIS VIEW.

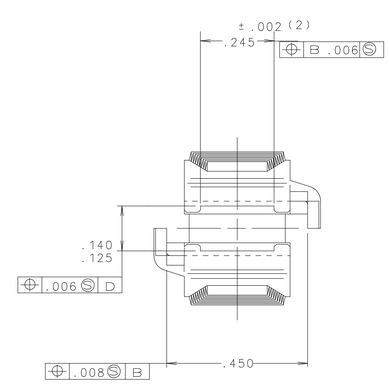

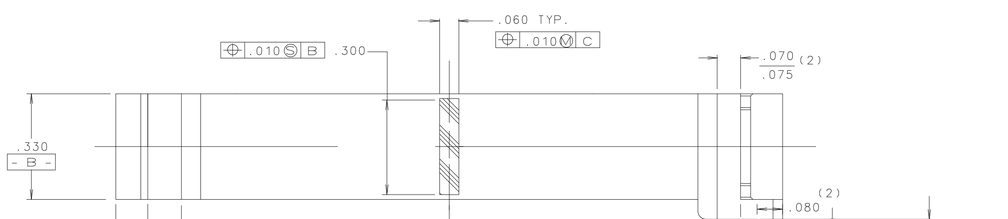

SECTION A-A

NOTES

UNLESS OTHERWISE SPECIFIED:

1. 1/2 DEGREE MAXIMUM DRAFT PER SIDE.
2. EJECTOR PIN MARKS TO BE FLUSH TO .008 BELOW SURFACE.
3. MAXIMUM FLASH LIMITS: .003" HEIGHT, .005" WIDTH.
4. ALL DIMENSIONS ARE TYPICAL FOR REPEATED FEATURES.
5. O END "A" & END "B" MUST BE CAPABLE TO BE SQUEEZED TO BOTTOM AND RETURN TO ITS NORMAL POSITION.
6. LETTERING: .031 HIGH GOTHIC CHARACTERS, .003/.010 RAISED.
7. ALL INTERNAL RADII TO BE .015 MAX..
8. PACK 5000 PCS IN -890-750 POLYETHYLENE BAG. CLOSE WITH WIRE TIE -890-471. PLACE IN BOX -580143. LABEL BOX WITH COMPUTER GENERATED LABEL -914-796 AND SEAL WITH -088120 TAPE.

NO	COMPONENT NO	DESCRIPTION	QT/M	U/M
-	914-796	LABEL, BAR CODE	.2	EA
-	890-750	POLY BAG	.2	EA
-	580143	CARTON	.2	EA
-	057348	NYLON RESIN	5.726	LB
-	057892	COLOR CONCENTRATE	.117	LB

BILL OF MATERIAL

UNLESS OTHERWISE SPECIFIED, DIMENSIONS DO NOT INCLUDE PLATING.

O	DENOTES CRITICAL CHARACTERISTICS.
CPK	DENOTES CPK DIMENSIONS, MINIMUM CPK VALUE
SI	DENOTES A CHARACTERISTIC THAT PROVIDES AN INDICATION OF PROCESS PERFORMANCE. PROCEDURE FOR MEASUREMENT AND TRACKING TO BE DEFINED IN LITTELFUSE INSPECTION INSTRUCTIONS.
CP	DENOTES CP DIMENSIONS. MINIMUM CP VALUE MUST BE WITHIN THE DIMENSIONAL LIMITATIONS SHOWN ON DRAWING AND INITIALLY LOCATED TO ALLOW FOR MAXIMUM TOOL LIFE.

MATL SPEC

COPIES TO

1	9	18
2	10	19
3	12	20
4	13	21
5	14	23
6	15	33
7	16	43
8	17	53

FINISH

DRW	JMB	DATE 11/10/98	SCALE 2:1
CHK		DATE	SUPER DR
APPD		DATE	RAW STK WT LBS/M

TOLERANCE UNLESS OTHERWISE SPECIFIED
TWO PLACE DEC ±.01 FRACTION ±
THREE PLACE DEC ±.005 ANGULAR ±1°

TITLE
FUSE INSERTER AND EXTRACTOR
(STD. & MINI ATO FUSES)

Littelfuse
DES PLAINES, ILLINOIS 60016

REVISION B | DRWG. NO. 00970038Z | FINAL

D

UNCONTROLLED DOCUMENT

CAD GENERATED DRAWING - NO PENCIL CHANGES ALLOWED