THIS DRAWING IS UNPUBLISHED. RELEASED FOR PUBLICATION -,- .
© COPYRIGHT - By - ALL RIGHTS RESERVED.

LOC	DIST
CE	16

REVISIONS

P	LTR	DESCRIPTION	DATE	DWN	APVD
	C	ECR-14-011637	22AUG2014	HZ	RZ

1. MAXIMUM INSERTION LOSS IS 0.2 dB PLUS CABLE ATTENUATION OF 1.5dB/km at 1300nm (SEE TABLE)

2. PRODUCT AND PROCESSING MUST MEET REQUIREMENTS OF TEC-138-702

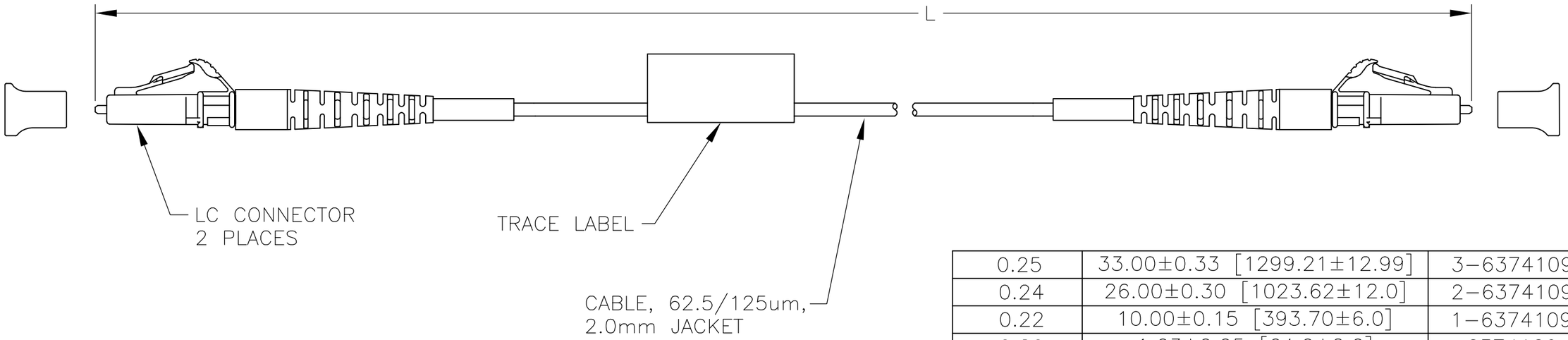

MAX IL (dB) [1]	L METERS [INCHES]	PART NUMBER
0.25	33.00±0.33 [1299.21±12.99]	3-6374109-3
0.24	26.00±0.30 [1023.62±12.0]	2-6374109-6
0.22	10.00±0.15 [393.70±6.0]	1-6374109-0
0.20	1.63±0.05 [64.0±2.0]	6374109-9
0.20	0.488±0.04 [19.2±1.6]	6374109-8
0.20	0.355±0.04 [14.0±1.6]	6374109-7
0.20	1.40±0.05 [55.12±2.00]	6374109-6
0.21	5.00±0.05 [196.85±2.00]	6374109-5
0.21	4.00±0.08 [157.50±3.00]	6374109-4
0.20	3.00±0.05 [118.11±2.00]	6374109-3
0.20	2.00±0.05 [78.74±2.00]	6374109-2
0.20	1.00±0.05 [39.37±2.00]	6374109-1

THIS DRAWING IS A CONTROLLED DOCUMENT.

DIMENSIONS: mm

TOLERANCES UNLESS OTHERWISE SPECIFIED:
0 PLC ± -
1 PLC ± -
2 PLC ± -
3 PLC ± -
4 PLC ± -
ANGLES ± -

MATERIAL -

FINISH -

DWN	C.S.VASU	02 SEP 05
CHK	J.DUNCAN	02 SEP 05
APVD	J.DUNCAN	02 SEP 05
PRODUCT SPEC	—	
APPLICATION SPEC	—	
WEIGHT	—	

TE Connectivity

NAME
CABLE ASSEMBLY, FIBER OPTIC, 62.5/125um, 2.0mm CABLE, LC TO LC
—

SIZE	CAGE CODE	DRAWING NO	RESTRICTED TO
A3	00779	C-6374109	—

CUSTOMER DRAWING | SCALE NTS | SHEET 1 OF 1 | REV C