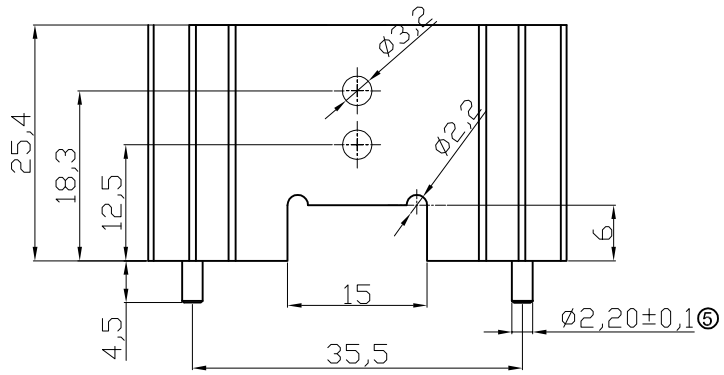

V7466W

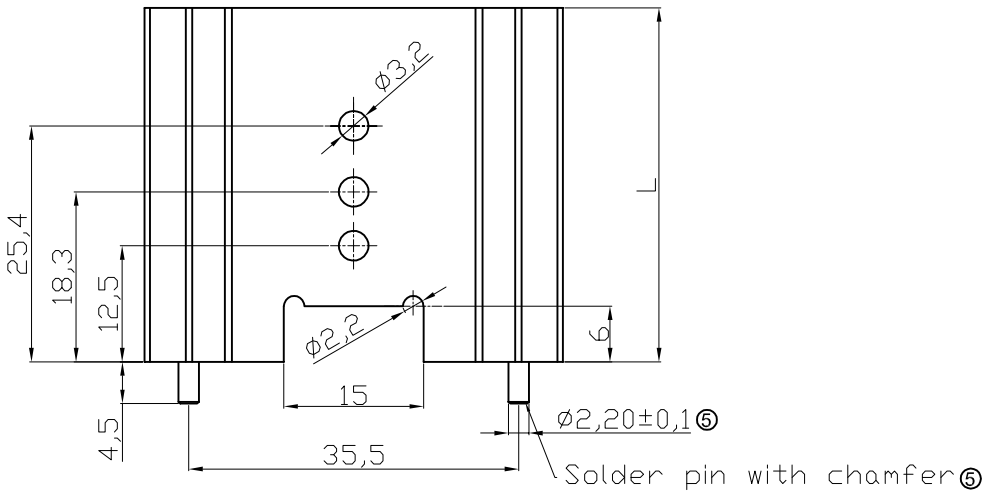

V7466X/Y/Z

Material : AL 6063-T5
Finished: Black Anoized
⑥ Pin: Fe, Tin plated

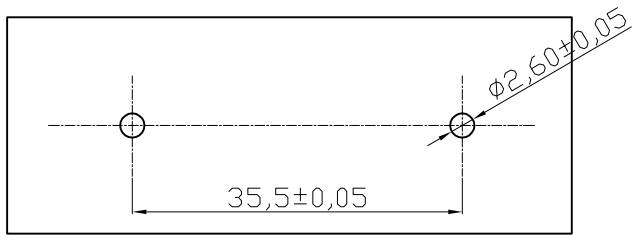

⑤ Recommended PCB Layout

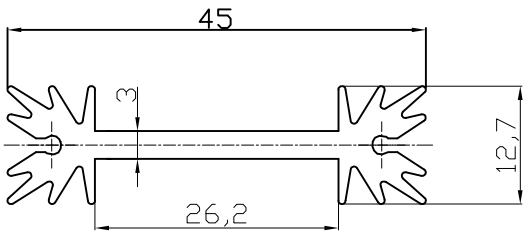

Option	L	Thermal resistance(K/W)
V7466W	25.4	8.2
V7466X	38.1	7
V7466Y	50.8	6.2
V7466Z	63.5	5.6

RoHS compliant
Unit: mm

Scale	FREE
TOLERANCE	
UNIT	±0.2
DIM	Tol
X.°	±X°
X.X°	±X°
Angle	TOL

Id.	Modification	Date	Name
⑥	Add solder pin information	22.03.2017	Amy
⑤	Add PCB layout information	24.02.2014	Amy
④	Change production plant	07.06.2013	Amy
③	Modify drawing layout	08.03.2010	Dean
②	Update	11.08.2009	Dean
①	Drawn	11.08.2009	Storb

	Date	Name
Drawn	31.10.2008	Storb
Approved	22.03.2017	Amy

ASSMANN wsw components

Customer-No.

ASSMANN WSW-No. V7466x

Drawing-No. ASS 0527 HS

rev06

Replace

Sheet