UNIT:mm

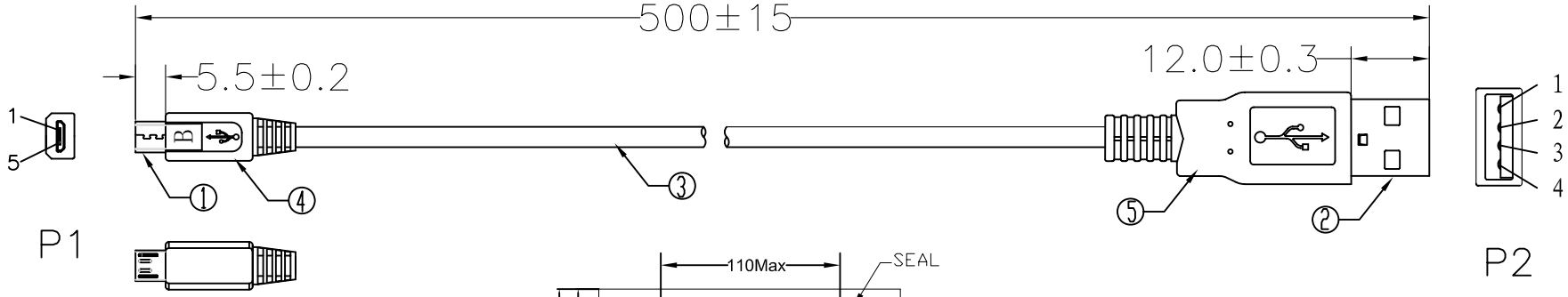

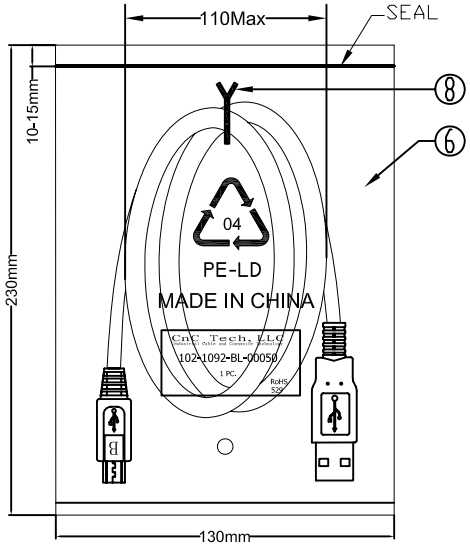

1PC/PE BAG

PIN ASSIGNMENT

P1		P2
1	RED	1
2	WHITE	2
3	GREEN	3
5	BLACK	4
SHELL	DRAIN+BRAID	SHELL

Electrical test:
1.100% short,open,miswire test
2.Conduct resistance:2 Ohm(max)
3.Insulation resistance:10Mohm(min)
4.dielectric test:DC 300V

NO.	NAME	Q'TY	SPECIFICATION
⑧	TIE	1	BLACK L=60mm
⑦	PE BAG	1/10	CLEAR SIZE: 280*330*0.05mm PRINT BLACK"MADE IN CHINA"+"10PCS"及印生产周期，有透气孔.
⑥	PE BAG	1	CLEAR SIZE: 130*230*0.05mm PRINT BLACK"MADE IN CHINA"+"1PC"及印生产周期,有透气孔.
⑤	OUT JACKET	6g	BLACK PVC-40P (MOULD NO:WM-40)
④	OUT JACKET	6g	BLACK PVC-40P (MOULD NO:WM-116)
③	CABLE	1	USB2.0 UL2725 [28AWG(7/0.12TC+AL)*1P+28AWG(7/0.12TC)*2C]+AEB(48B TC) JACKET:BLACK OD:3.5mm L=490±5mm
②	CONN	1set	USB A MALE SHELL:NICKEL PIN:G/F 3PCS TYPE INSULATOR COLOR:WHITE
①	CONN	1	MICRO USB 5P B/M SOLDER TYPE SHELL:NICKEL PIN:G/F INSULATOR COLOR:BLACK

CnC Tech, LLC
Industrial Cable and Connector Technology

DRAWED	ZHONGHS	DRAWING NO	
CHECKED		CUSTOMER	
APPROVAL		ITEM NO.	102-1092-BL-00050
DECIDED		DATE	2012-02-17
VERSIONS/EDITEON	A/0	PROJECTION	