RoHS compliant

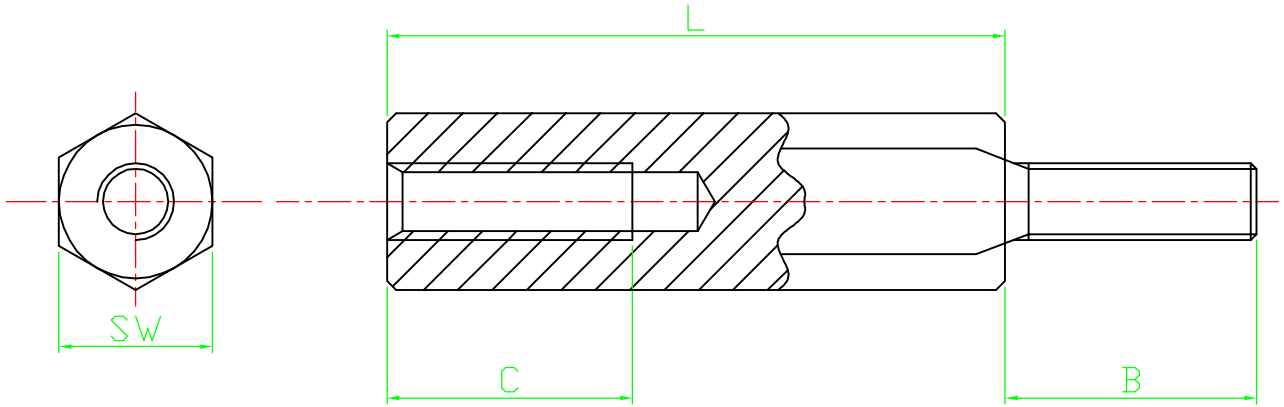

Width across flat(SW)5
Thread M2.5

Option	Dimensions		
	L	B	C min
A	5	6	2.5
B	8	6	5
C	10	6	6
D	12	6	6
E	15	6	6
F	18	6	6
G	20	6	6
H	25	6	6
K	30	6	6

Scale	1:1						Date	Name
TOLERANCE						Drawn	20.08.2009	Dean
X.	±X					Approved	20.08.2009	Andy
X.X	±X							
X.XX	±X							
DIM	TOL							
X.°	±X°							
X.X°	±X°	①	Drawn	20.08.2009	Dean			
Angle	TOL	Id.	Modification	Date	Name			

ASSMANN WSW components

Customer-No.

ASSMANN WSW-No. V6622x

Drawing-No. ASS 0493 HS

rev01

Replace

Sheet