THIS DRAWING IS UNPUBLISHED. RELEASED FOR PUBLICATION -,- .
© COPYRIGHT - BY TYCO ELECTRONICS CORPORATION. ALL RIGHTS RESERVED.

LOC	DIST
AD	00

REVISIONS

P	LTR	DESCRIPTION	DATE	DWN	APVD
	A1	REV PER ECO-10-000444	19JAN10	KK	HMR
	B	ECR-10-018652	10SEP10	JS	MQW
	C	ECO-11-024491	13DEC11	SY	MQW

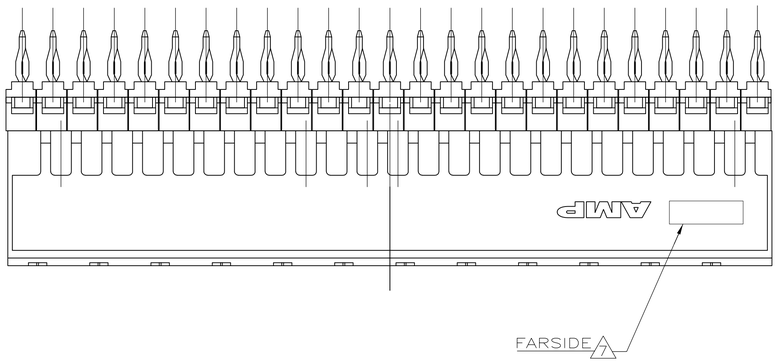

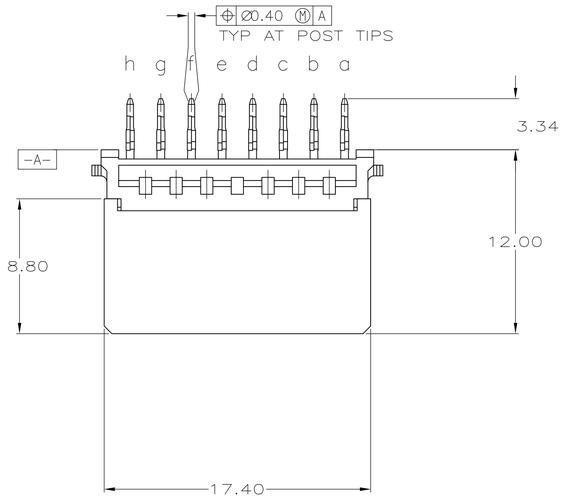

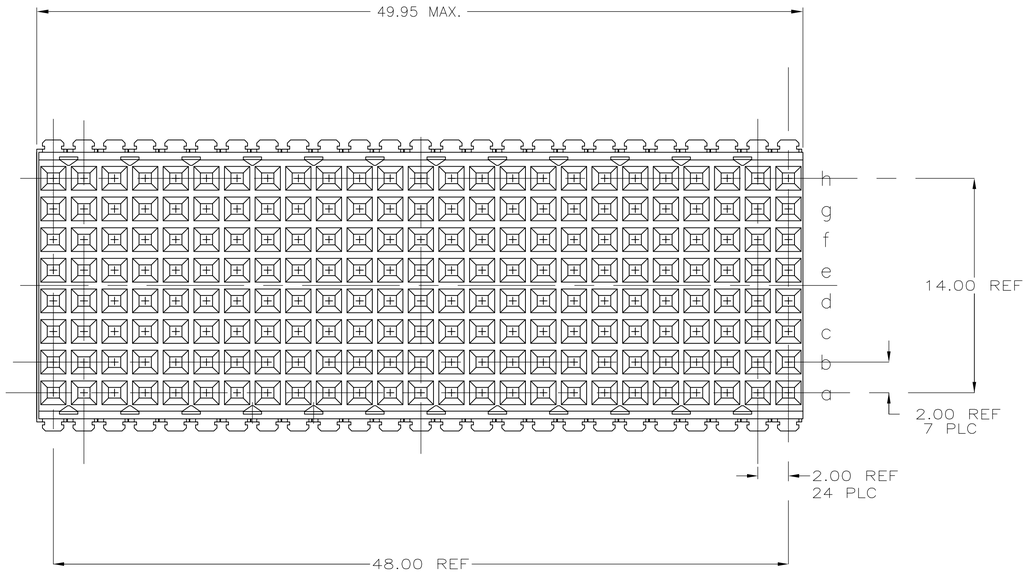

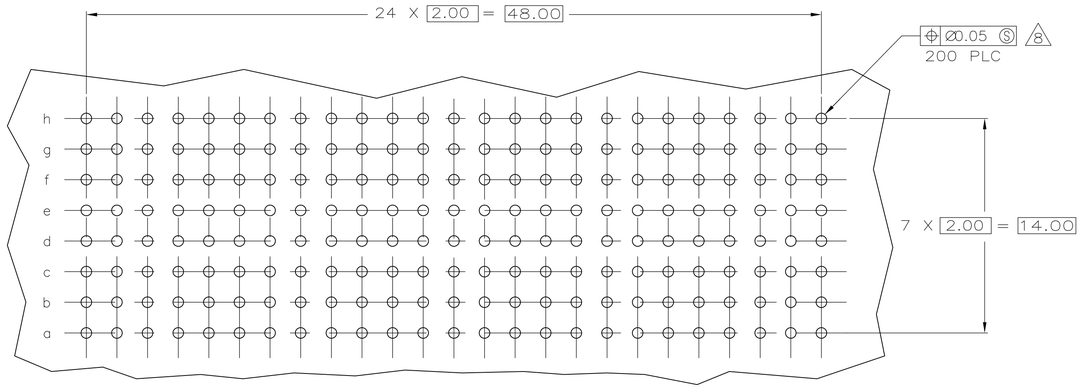

RECOMMENDED PCB HOLE LAYOUT
COMPONENT SIDE SHOWN

1. MATERIAL:
   CONTACT: PHOSPHOR BRONZE.
   HOUSING: GLASS-FILLED POLYESTER.
2. GENERAL PLATING SPECIFICATION: UNDERPLATING (ENTIRE CONTACT): 1.27μm MIN NICKEL AND ACTION PIN: 0.5μm MIN TIN.
   FOR PLATING OF MATING SURFACES SEE APPLICABLE SPECIFICATION REFERENCE FOR EACH DASH NUMBER.
3. CONFORMS TO ALL TESTING ACCORDING TO IEC 61076-4-101 PERFORMANCE LEVEL 2.
4. CONFORMS TO ALL TESTING ACCORDING TO IEC 61076-4-101 PERFORMANCE LEVEL 1.
5. CONNECTOR TESTED AND QUALIFIED AGAINST TELCORDIA GR-1217-CORE QUALITY LEVEL 3, CENTRAL OFFICE APPLICATIONS.
6. CONNECTOR TESTED AND QUALIFIED AGAINST TELCORDIA GR-1217-CORE QUALITY LEVEL 3, UNCONTROLLED ENVIROMENT APPLICATIONS.
7. CONNECTOR MARKED WITH PART NUMBER AND DATE CODE. ADDITIONAL CHARACTERS OR MARKINGS, AS WELL AS THE LOCATION OF THE MARKINGS, MAY BE ADDED FOR TRACEABILITY BASED UPON MANUFACTURERS DISCRETION.
8. PLATED-THROUGH HOLES AT 2x2mm SQUARE GRID 200 HOLES.
9. CONNECTOR LUBRICATED WITH BELCORE APPROVED LUBRICANT, TECHNICAL REFERENCE: TR-NWT-001217 ISSUE 1, SEP 1992.
10. OBSOLETE PARTS: OBSOLETE CIS STREAMLINING PER D.RENAUD/D.SINISI

PLATED THRU HOLES PARAMETERS
REFERENCE APPLICATION SPECIFICATION

	FINISH	PART NUMBER
10 OBSOLETE	2 6 9	~~1-5646539-9~~
	2 5 9	~~5646539-9~~
	2 4	~~5646539-4~~
	2 3	5646539-1

THIS DRAWING IS A CONTROLLED DOCUMENT.

DIMENSIONS: mm

TOLERANCES UNLESS OTHERWISE SPECIFIED:
0 PLC ±—
1 PLC ±—
2 PLC ±0.13 ±0.2
3 PLC ±—
4 PLC ±—
ANGLES ±4°

MATERIAL 1

FINISH SEE TABLE

DWN	B.CARBO	29JUL05
CHK	G.SKIPPER	29JUL05
APVD	G.SKIPPER	29JUL05
PRODUCT SPEC	108-1622	
APPLICATION SPEC	114-19029	
WEIGHT	—	

Tyco Electronics
Tyco Electronics Corporation
Harrisburg, PA 17105-3608

NAME: RECEPTACLE ASSEMBLY, VERTICAL, 200 POSN., TYPE E, 8 ROW, Z-PACK 2mm HM
—

SIZE	CAGE CODE	DRAWING NO	RESTRICTED TO
A1	00779	C-5646539	—

CUSTOMER DRAWING | SCALE 5:1 | SHEET 1 OF 1 | REV C